DIST.	COUNTY	ROUTE	KILOMETER POST TOTAL PROJECT	SHEET NO.	TOTAL SHEETS
04	SF	80	13.2/13.9	813R1	1204

Caltrans Metric

REGISTERED ENGINEER - CIVIL

12-6-04
PLANS APPROVAL DATE

REGISTERED PROFESSIONAL ENGINEER Marwan N. Nader No. C 054426 Exp. 12/31/07 CIVIL STATE OF CALIFORNIA

The State of California or its officers or agents shall not be responsible for the accuracy or completeness of electronic copies of this plan sheet.

T.Y. LIN / MOFFATT & NICHOL
825 BATTERY STREET
SAN FRANCISCO, CA 94111

Caltrans now has a web site! To get to the web site, go to: http://www.dot.ca.gov

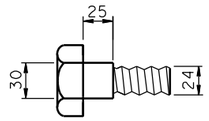

SHOULDER BOLT DETAIL

1:2.5
(At panel point 8 and 104 only)

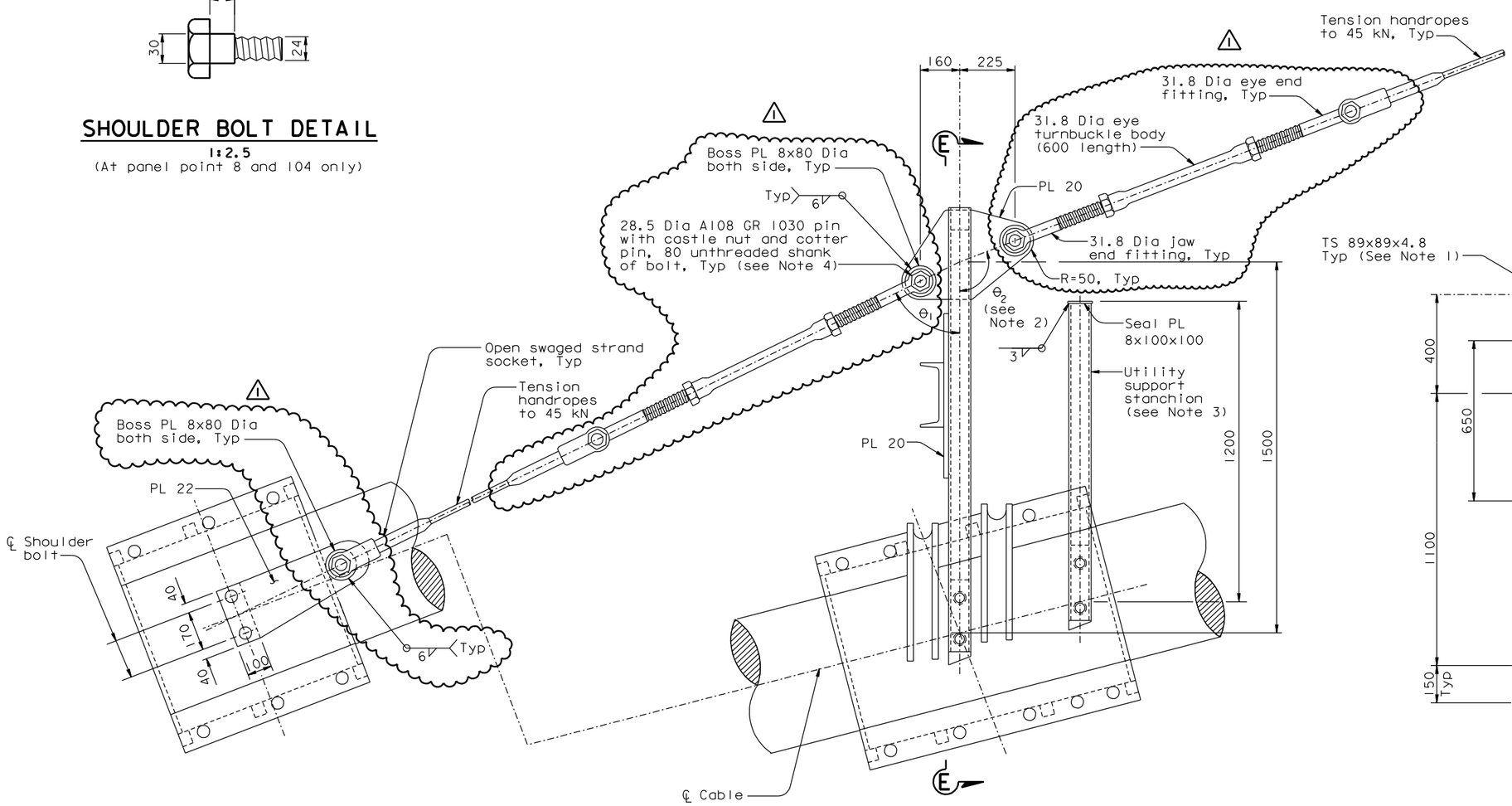

HANDROPE ANCHORAGE AT PANEL POINT 8

(Details at panel point 104 are similar)

ANCHOR STANCHION AT PANEL POINT 10

(Details at panel points 40, 44 & 102 are similar)

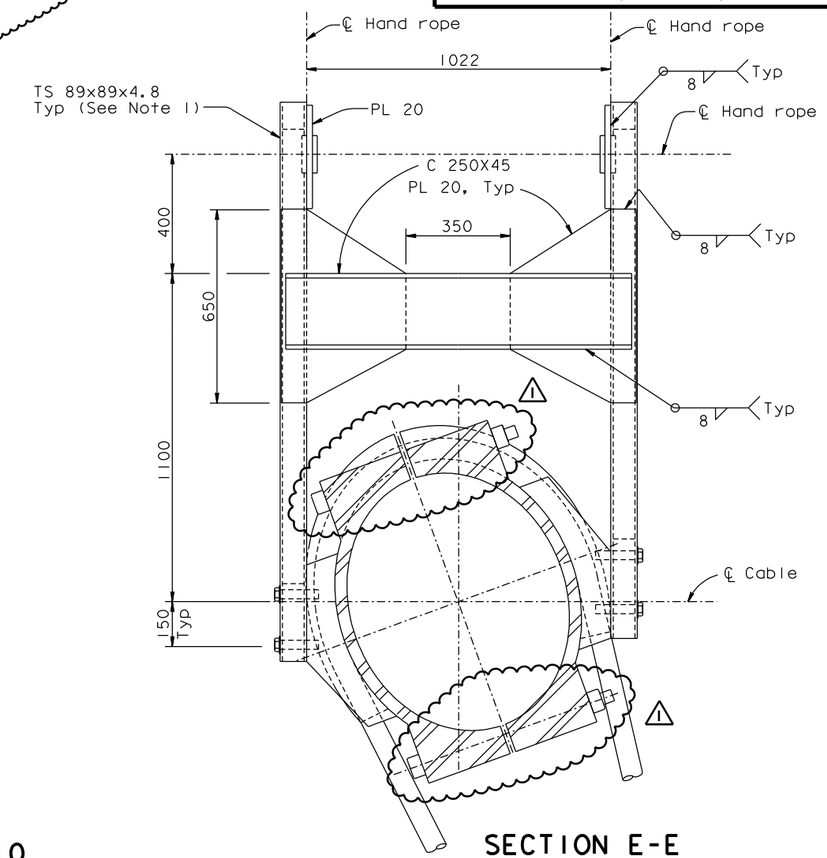

SECTION E-E

1:10

DETAIL A

1:10

NOTES:

1. For details not shown, see "Cable Band Details" and "Cable Handrope Details No.1" sheets.
2. For handrope bracket angles, see "Cable Handrope Details No.3" sheet.
3. For details not shown, see "Cable Handrope Details No.1" sheet. For utility support stanchion locations, see "Road Plans" sheets.
4. The Contractor may revise the pin details as approved by the Engineer. The pin shall develop the breaking load of the handrope.

MARK	DATE	DESCRIPTIONS	BY	CH'D	CCO#
1	04/16/07	CABLE SYSTEM	GB	MN	37

REVISIONS

CONTRACT CHANGE ORDER NO. _____
SHEET ____ OF ____

ALL DIMENSIONS ARE IN MILLIMETERS UNLESS OTHERWISE SHOWN

R. Valizadeh/V. Toan/Y.L./W.L./F.C.
DESIGN OVERSIGHT
SIGN OFF DATE 04/16/07

Rev. Date: 5-18-98

	BY	CHECKED
DESIGN	M. Nader	T. McMeans
DETAILS	G. Baker	T. McMeans
QUANTITIES	G. Baker	C. Mibelli

ORIGINAL SCALE IN MILLIMETERS FOR REDUCED PLANS 0 10 20 30 40 50 60 70 80 90 100

PREPARED FOR THE STATE OF CALIFORNIA DEPARTMENT OF TRANSPORTATION

R. Manzanarez
PROJECT ENGINEER

BRIDGE NO. 34-0006L/R
KILOMETER POST 13.2/13.9

CU 04
EA 0120F1

SAN FRANCISCO OAKLAND BAY BRIDGE
EAST SPAN SEISMIC SAFETY PROJECT
SELF-ANCHORED SUSPENSION BRIDGE
(SUPERSTRUCTURE & TOWER)

CABLE HANDROPE DETAILS NO. 2

DISREGARD PRINTS BEARING EARLIER REVISION DATES

REVISION DATES (PRELIMINARY STAGE ONLY): 05/15/99 08/02/99 05/31/01 04/08/02 07/01/02 12/19/02

SHEET 396R1 OF

FILE => I:\bb\04-012001\sas\contract plans and cco\cco\in progress\cco#37\dgn\cagshr08.dgn

USERNAME => ptom DATE PLOTTED => 24 APR 2007 TIME PLOTTED => 11:43:20

100% PS&E