DIST.	COUNTY	ROUTE	KILOMETER POST TOTAL PROJECT	SHEET NO.	TOTAL SHEETS
04	SF	80	13.2/13.9	753R1	1204

Caltrans Metric

George Baker
REGISTERED ENGINEER - CIVIL
12-6-04
PLANS APPROVAL DATE

REGISTERED PROFESSIONAL ENGINEER George S. Baker No. C 57112 Exp. 12/31/05 CIVIL STATE OF CALIFORNIA

The State of California or its officers or agents shall not be responsible for the accuracy or completeness of electronic copies of this plan sheet.

T.Y. LIN / MOFFATT & NICHOL
825 BATTERY STREET
SAN FRANCISCO, CA 94111

Caltrans now has a web site! To get to the web site, go to: http://www.dot.ca.gov

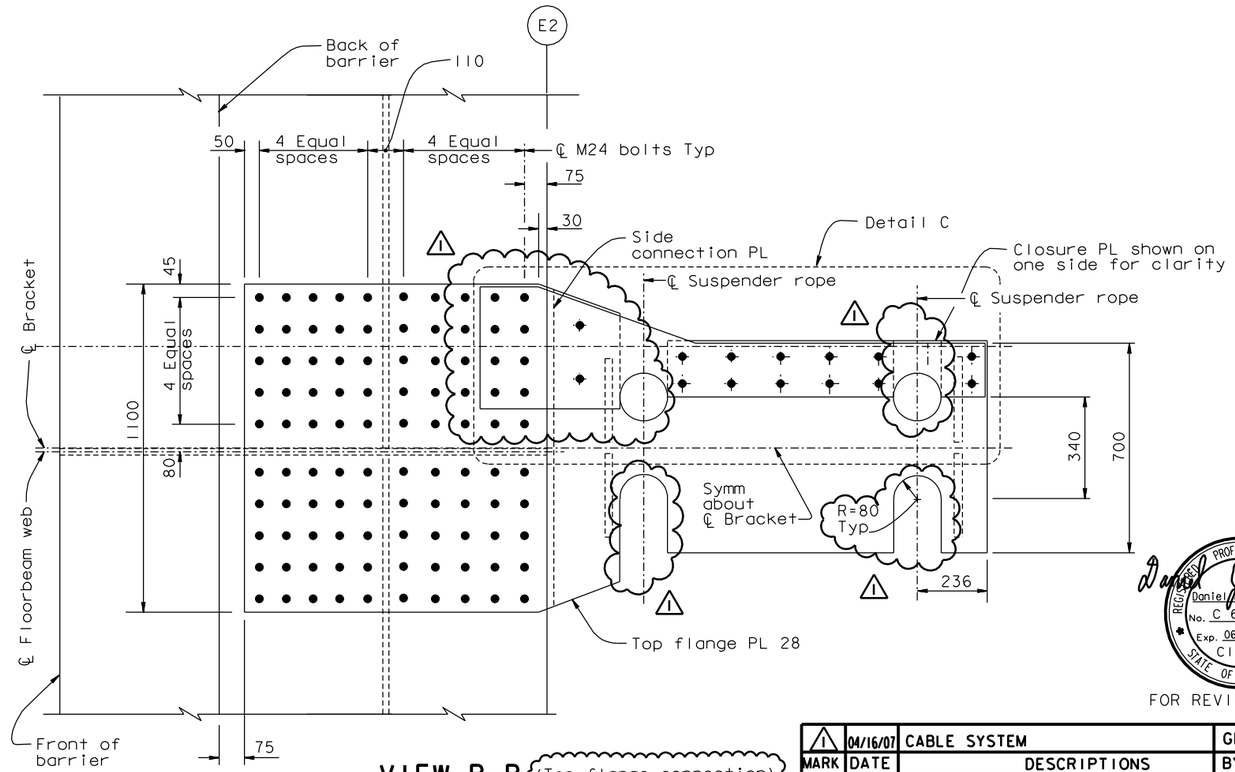

VIEW B-B (Top flange connection)
1:10

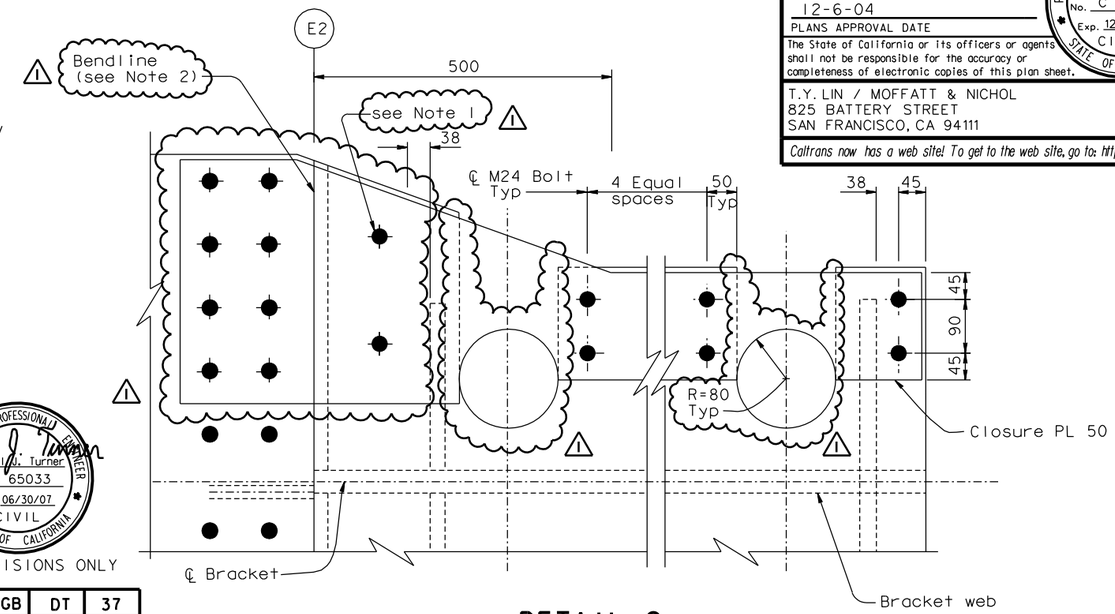

DETAIL C
1:5

Daniel J. Turner
REGISTERED PROFESSIONAL ENGINEER Daniel J. Turner No. C 65033 Exp. 06/30/07 CIVIL STATE OF CALIFORNIA

FOR REVISIONS ONLY

MARK	DATE	DESCRIPTIONS	BY	CH'D	CCO#
1	04/16/07	CABLE SYSTEM	GB	DT	37

REVISIONS

CONTRACT CHANGE ORDER NO. ____
SHEET ___ OF ___

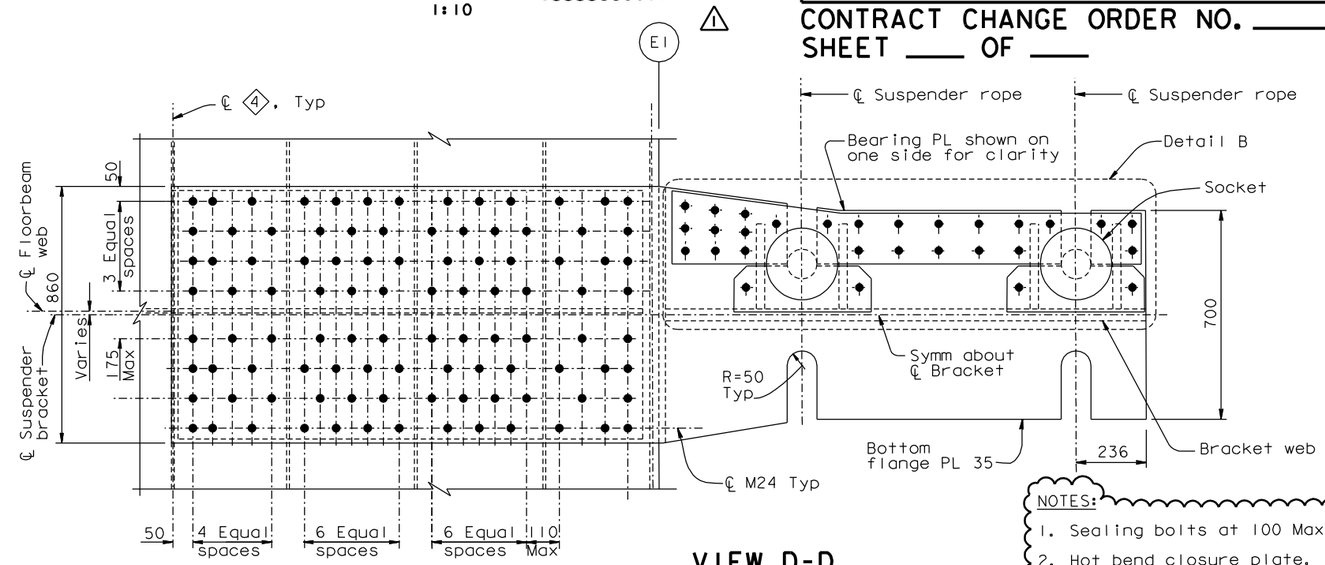

VIEW D-D
1:10

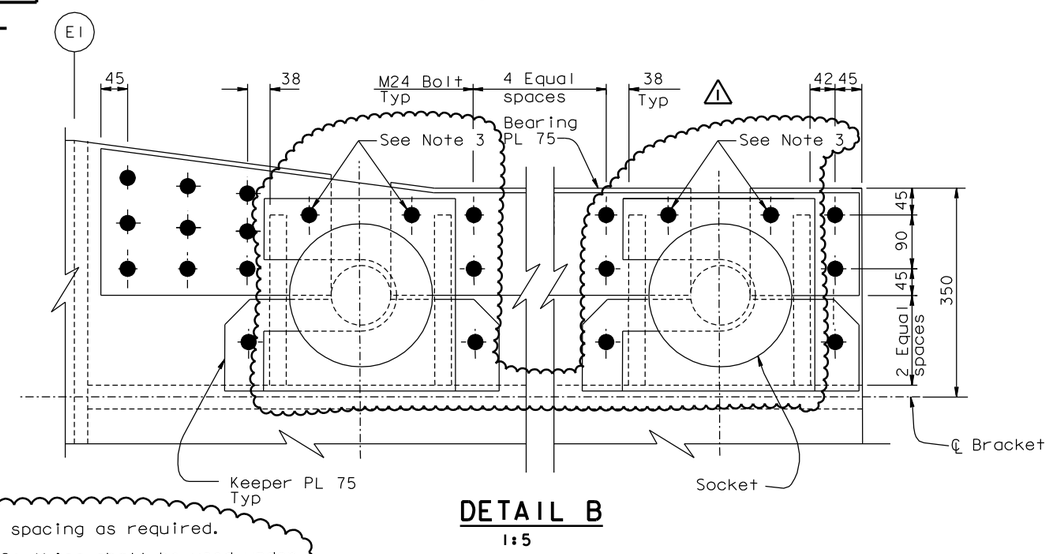

DETAIL B
1:5

NOTES:

1. Sealing bolts at 100 Max spacing as required.
2. Hot bend closure plate. Caulking shall be used under the bend line to fill gap between plates.
3. Bolts interfering with shims shall be installed in 40 mm deep counter bores in the bearing PL 75.

ALL DIMENSIONS ARE IN MILLIMETERS UNLESS OTHERWISE SHOWN

R. Valizadeh/V. Toan/Y.L./W.L./F.C.
DESIGN OVERSIGHT
Roya Valizadeh / Vang Toan / Y. Lui
SIGN OFF DATE 04/16/07

DESIGN	BY G. Baker	CHECKED T. McMeans	
DETAILS	BY S. Camo	CHECKED P. Ritchie	
QUANTITIES	BY C. Mauch	CHECKED C. Mibelli	

PREPARED FOR THE STATE OF CALIFORNIA DEPARTMENT OF TRANSPORTATION

R. Manzanarez
PROJECT ENGINEER

BRIDGE NO. 34-0006L/R
KILOMETER POST 13.2/13.9

SAN FRANCISCO OAKLAND BAY BRIDGE
EAST SPAN SEISMIC SAFETY PROJECT
SELF-ANCHORED SUSPENSION BRIDGE
(SUPERSTRUCTURE & TOWER)

SUSPENDER BRACKET DETAILS NO. 7

Rev. Date: 5-18-98

ORIGINAL SCALE IN MILLIMETERS FOR REDUCED PLANS 0 10 20 30 40 50 60 70 80 90 100

CU 04
EA 0120F1

DISREGARD PRINTS BEARING EARLIER REVISION DATES

REVISION DATES (PRELIMINARY STAGE ONLY) 05/15/99 08/02/99 05/31/01 04/08/02 01/07/02 12/19/02

SHEET 336R1 OF

FILE => I:\bb\04-0120I\sas\contract plans and cco\cco\in progress\cco#37\dgn\cagsad13a.dgn

USERNAME => ptom DATE PLOTTED => 24 APR 2007 TIME PLOTTED => 11:40:12

100 % PS&E