DIST.	COUNTY	ROUTE	KILOMETER POST TOTAL PROJECT	SHEET NO.	TOTAL SHEETS
04	SF	80	13.2/13.9	740R2	1204

REGISTERED ENGINEER - CIVIL

12/19/02

PLANS APPROVAL DATE

The State of California or its officers or agents shall not be responsible for the accuracy or completeness of electronic copies of this plan sheet.

REGISTERED PROFESSIONAL ENGINEER Marwan N. Nader No. C 054426 Exp. 12/31/07 CIVIL STATE OF CALIFORNIA

T.Y. LIN / MOFFATT & NICHOL
825 BATTERY STREET
SAN FRANCISCO, CA 94111

To get to the web site, go to: http://www.dot.ca.gov

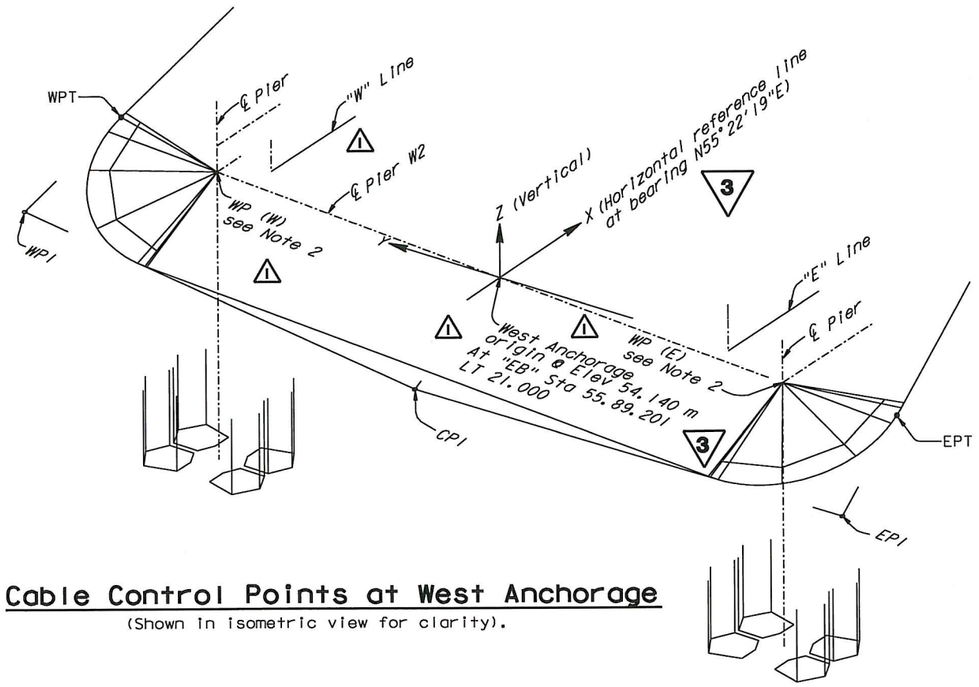

Cable Control Points at West Anchorage

(Shown in isometric view for clarity).

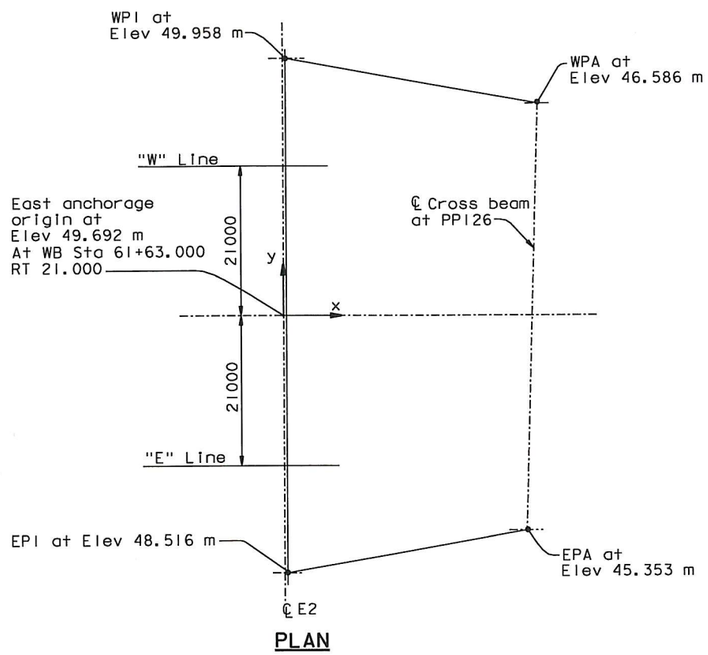

PLAN

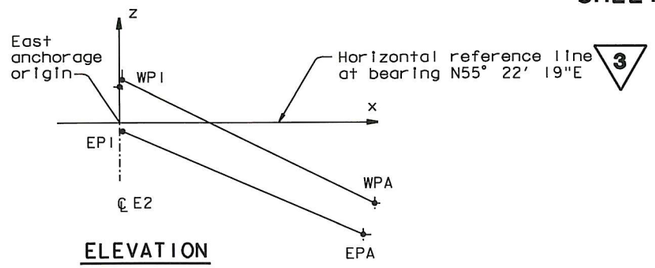

ELEVATION

Cable Control Points at East Anchorage

MARK	DATE	DESCRIPTIONS	BY	CH'D	CCO#
2	04/16/07	CABLE SYSTEM	GB	MN	37
1	01/31/07	WEST DEVIATION SADDLE GEOMETRY	AS	MN	15

REVISIONS

CONTRACT CHANGE ORDER NO. 37SO
SHEET 9 OF 24

NOTES:

1. At the west anchorage the cable profile shall be determined from the EPT and WPT. Geometry of saddles shall conform to EPI, WPI and CPI.
2. WP(W) & WP(E) do not coincide with ℄ Pier W2, ℄ Pier W2E nor ℄ Pier W2W.

COORDINATES OF CONTROL POINTS OF WEST ANCHORAGE (WEST ANCHORAGE COORDINATE SYSTEM)

	"W" Line Saddle WP	"E" Line Saddle WP	WPT	WPI	CPI	EPT	EPI
X	30	-7	1318	-8804	-11278	1587	-8804
Y	26024	-25978	36396	38086	101	-36352	-38084
Z	1057	-1059	2060	-2411	-5080	-765	-5530

COORDINATES OF CONTROL POINTS OF EAST ANCHORAGE (EAST ANCHORAGE COORDINATE SYSTEM)

	WPI	WPA	EPI	EPA
X	393	35971	393	34241
Y	36045	29439	-36025	-29916
Z	266	-3117	-1176	-4351

REVISED PER ADDENDUM NO. 3 DATED NOVEMBER 7, 2005

ALL DIMENSIONS ARE IN MILLIMETERS UNLESS OTHERWISE SHOWN

SAN FRANCISCO OAKLAND BAY BRIDGE
EAST SPAN SEISMIC SAFETY PROJECT
SELF-ANCHORED SUSPENSION BRIDGE
(SUPERSTRUCTURE & TOWER)

SUSPENSION CABLE LAYOUT NO. 3

R. Valizadeh/V. Toan/Y.L./W.L./F.C.
DESIGN OVERSIGHT
SIGN OFF DATE 04/16/07

	BY	CHECKED
DESIGN	M. Nader	S. Rodriguez
DETAILS	C. Mibelli	S. Rodriguez
QUANTITIES	C. Mibelli	G. Baker

PREPARED FOR THE STATE OF CALIFORNIA DEPARTMENT OF TRANSPORTATION

R. Manzanarez
PROJECT ENGINEER

BRIDGE NO. 34-0006L/R
KILOMETER POST 13.2/13.9

Rev. Date: 5-18-98

ORIGINAL SCALE IN MILLIMETERS FOR REDUCED PLANS 0 10 20 30 40 50 60 70 80 90 100

CU 04
EA 0120F1

DISREGARD PRINTS BEARING EARLIER REVISION DATES

REVISION DATES (PRELIMINARY STAGE ONLY) 05/13/99 08/02/99 05/31/01 04/08/02 07/01/02 12/19/02

SHEET 323R2 OF

FILE => I:\bb\04-01200I\sas\contract plans and cco\cco\in progress\cco#37\dgn\cagsc103.dgn

100 % PS&E

DATE PLOTTED => 08 AUG 2007 TIME PLOTTED => 15:48:54

USERNAME => ptom

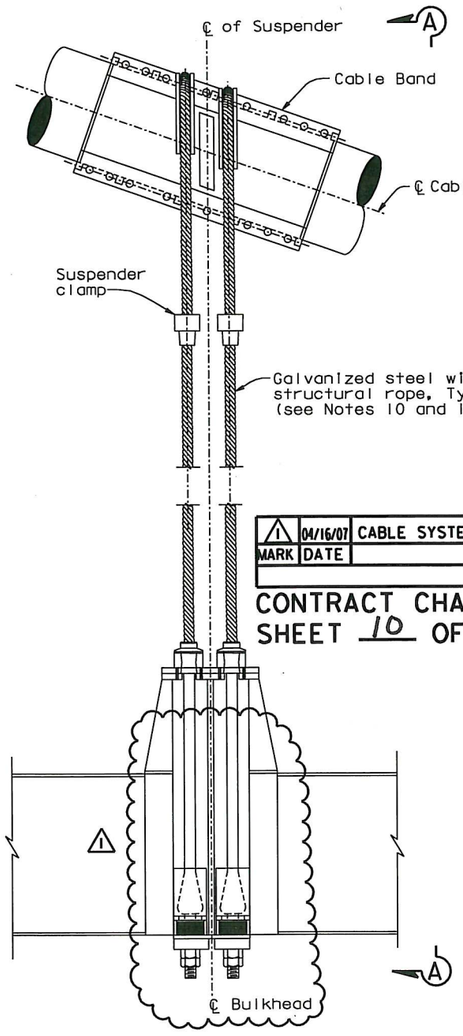

SUSPENDER TYPES 1 & 2

NTS

10. Type 1 Suspender ropes shall have a metallic area of at least 2742 mm² and a nominal diameter no greater than 78 mm. The vertical component of dead load on the four rope parts of one suspender shall be limited to 3200 kN.

11. Type 2 Suspender ropes shall have a metallic area of at least 4460 mm² and a nominal diameter no greater than 102 mm. The vertical component of dead load on the four rope parts of one suspender shall be limited to 4800 kN.

MARK	DATE	DESCRIPTIONS	BY	CH'D	CCO#
		REVISIONS			
1	04/16/07	CABLE SYSTEM	GB	MN	37

CONTRACT CHANGE ORDER NO. 3750
SHEET 10 OF 24

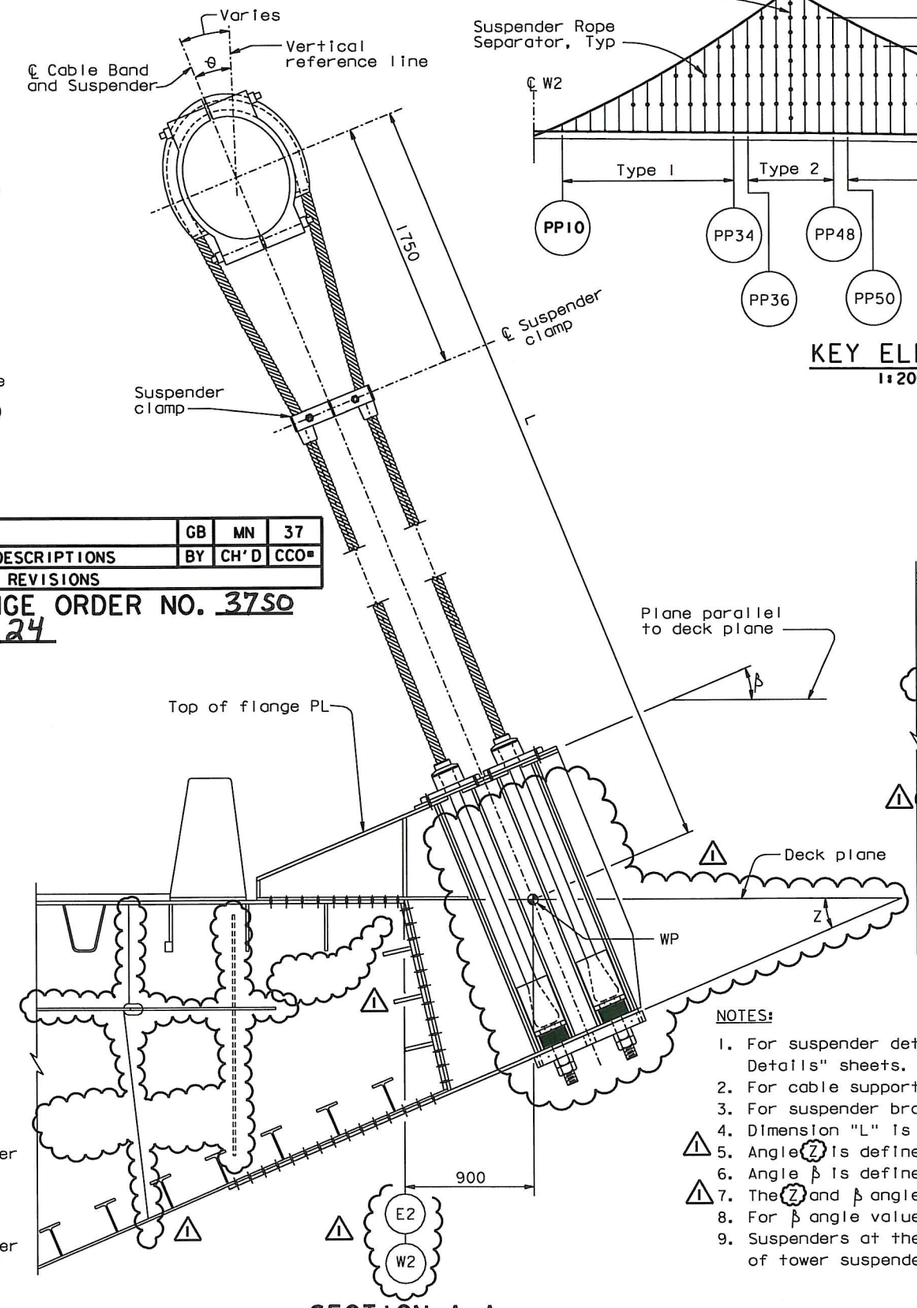

SECTION A-A (TYPICAL)

NTS

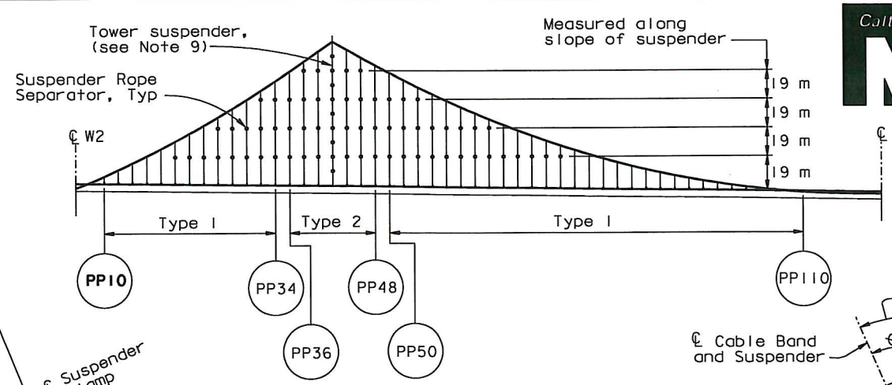

KEY ELEVATION

1:2000

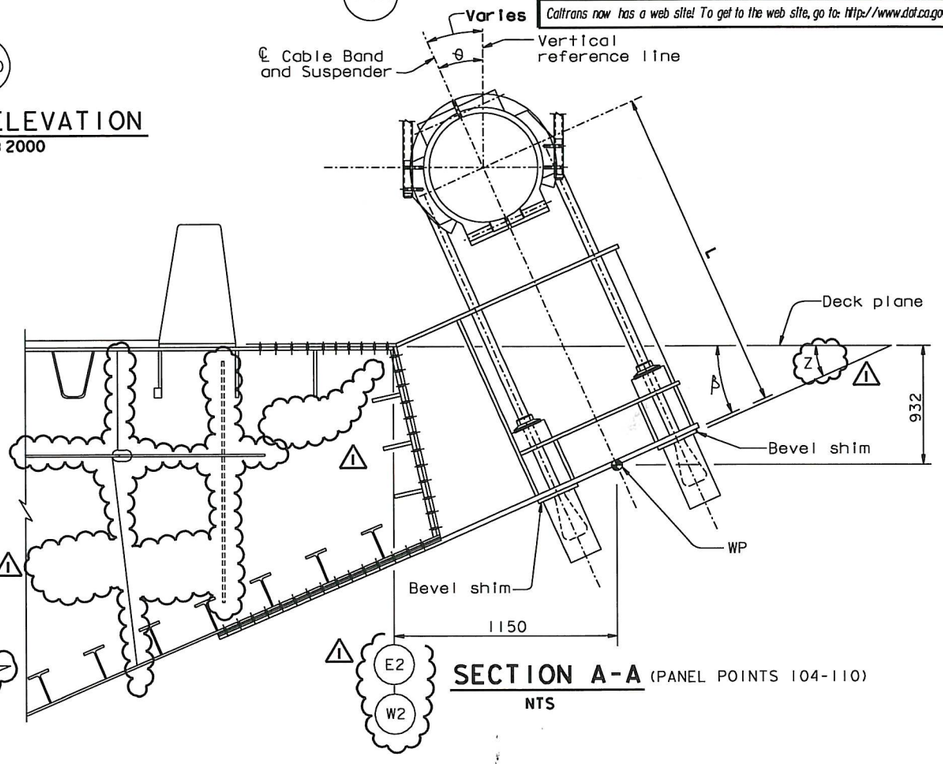

SECTION A-A (PANEL POINTS 104-110)

NTS

NOTES:

1. For suspender details, see "Suspender Assembly Details" sheets. For cable band details, see "Cable Band Details" sheets.
2. For cable support at PP 112, 114 & 116, see "Cable Bracket Details" sheets.
3. For suspender bracket details, see "Suspender Bracket Details" sheets.
4. Dimension "L" is defined as the distance between the ℄ of the cable and the WP of the suspender bracket.
5. Angle (Z) is defined as the angle between the deck plane and the top flange of the suspender bracket.
6. Angle β is defined as the angle between the deck plane and the top of the bevel shim.
7. The (Z) and β angles shall be taken as equal.
8. For β angle values, see "Suspender Bracket Details No.3" sheet.
9. Suspenders at the tower are architectural and are substantially different from all others. For details of tower suspenders, see "Suspenders At Tower Details" sheets.

DIST.	COUNTY	ROUTE	KILOMETER POST TOTAL PROJECT	SHEET NO.	TOTAL SHEETS
04	SF	80	13.2/13.9	742R1	1204

REGISTERED ENGINEER - CIVIL

12-6-04
PLANS APPROVAL DATE

REGISTERED PROFESSIONAL ENGINEER — Marwan N. Nader — No. C 054426 — Exp. 12/31/07 — CIVIL — STATE OF CALIFORNIA

The State of California or its officers or agents shall not be responsible for the accuracy or completeness of electronic copies of this plan sheet.

T.Y. LIN / MOFFATT & NICHOL
825 BATTERY STREET
SAN FRANCISCO, CA 94111

Caltrans now has a web site! To get to the web site, go to: http://www.dot.ca.gov

ALL DIMENSIONS ARE IN MILLIMETERS UNLESS OTHERWISE SHOWN

SAN FRANCISCO OAKLAND BAY BRIDGE
EAST SPAN SEISMIC SAFETY PROJECT

SELF-ANCHORED SUSPENSION BRIDGE (SUPERSTRUCTURE & TOWER)

SUSPENDER LAYOUT NO. 1

DESIGN	BY M. Nader	CHECKED S. Rodriguez	
DETAILS	BY C. Mibelli	CHECKED S. Rodriguez	
QUANTITIES	BY C. Mibelli	CHECKED G. Baker	

R. Valizadeh/V. Toan/Y.L./W.L./F.C.
DESIGN OVERSIGHT
SIGN OFF DATE 04/16/07

PREPARED FOR THE STATE OF CALIFORNIA
DEPARTMENT OF TRANSPORTATION

R. Manzanarez
PROJECT ENGINEER

BRIDGE NO. 34-0006L/R
KILOMETER POST 13.2/13.9

CU 04
EA 0120F1

DISREGARD PRINTS BEARING EARLIER REVISION DATES

REVISION DATES (PRELIMINARY STAGE ONLY): 01/15/99 05/15/99 08/20/99 05/24/01 04/08/02 07/01/02 12/19/02

SHEET 325R1 OF

Rev. Date: 5-18-98

ORIGINAL SCALE IN MILLIMETERS FOR REDUCED PLANS 0 10 20 30 40 50 60 70 80 90 100

FILE => I:\bb\04-0120I\sas\contract plans and cco\cco\In progress\cco#37\dgn\cagsus02.dgn

DATE PLOTTED => 29 AUG 2007 TIME PLOTTED => 16:30:24
100 % PS&E
USERNAME => ptom

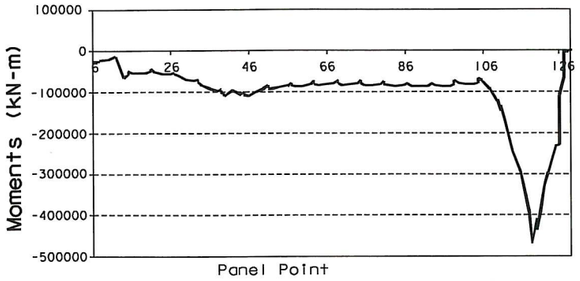

Chart A: DL Moment Corresponding to suspender forces shown in suspender Schedule (Eastbound shown, Westbound similar)

* Negative moment corresponds to tension at the top fiber.

MARK	DATE	REVISIONS DESCRIPTIONS	BY	CH'D	CCO#
1	04/16/07	CABLE SYSTEM	GB	MN	37

CONTRACT CHANGE ORDER NO. 3750

SHEET 11 OF 24

10. Suspender length "L" and forces shown are for information only. The Contractor shall compute the final installed suspender lengths based on suspender forces from his final erection engineering analysis, including measured reactions at Hinges A and K and his estimate of the suspender weight (based on fabrication shop drawings) of all installed materials.

Caltrans Metric

DIST.	COUNTY	ROUTE	KILOMETER POST TOTAL PROJECT	SHEET NO.	TOTAL SHEETS
04	SF	80	13.2/13.9	743R1	1204

REGISTERED ENGINEER - CIVIL

12-6-04
PLANS APPROVAL DATE

REGISTERED PROFESSIONAL ENGINEER — Marwan N. Nader — No. C 054426 — Exp. 12/31/07 — CIVIL — STATE OF CALIFORNIA

The State of California or its officers or agents shall not be responsible for the accuracy or completeness of electronic copies of this plan sheet.

T.Y. LIN / MOFFATT & NICHOL
825 BATTERY STREET
SAN FRANCISCO, CA 94111

Caltrans now has a web site! To get to the web site, go to: http://www.dot.ca.gov

SUSPENDER SCHEDULE

West Bound										East Bound									
Panel Point	L (m)	θ (degree)	Z (degree)	Force "F" (kN)	Panel Point	L (m)	θ (degree)	Z (degree)	Force "F" (kN)	Panel Point	L (m)	θ (degree)	Z (degree)	Force "F" (kN)	Panel Point	L (m)	θ (degree)	Z (degree)	Force "F" (kN)
PP10	7.40	17.58	16.48	3011	PP62	55.32	19.76	18.82	2803	PP10	6.99	18.59	19.77	2995	PP62	56.15	19.50	20.84	2816
PP12	12.38	18.55	17.48	2983	PP64	51.15	19.82	18.96	2810	PP12	12.02	19.11	20.31	2928	PP64	51.93	19.56	20.89	2823
PP14	17.54	18.94	17.90	2552	PP66	47.15	19.89	19.01	2807	PP14	17.23	19.28	20.52	2534	PP66	47.89	19.62	21.03	2820
PP16	22.86	19.13	18.12	2550	PP68	43.33	19.96	19.05	2821	PP16	22.61	19.35	20.61	2534	PP68	44.01	19.69	21.07	2834
PP18	28.33	19.24	18.26	2544	PP70	39.67	20.03	19.11	2825	PP18	28.15	19.37	20.66	2527	PP70	40.31	19.76	21.12	2837
PP20	33.95	19.30	18.35	2553	PP72	36.18	20.10	19.16	2818	PP20	33.85	19.36	20.69	2536	PP72	36.77	19.83	21.17	2830
PP22	39.73	19.33	18.41	2551	PP74	32.86	20.18	19.22	2829	PP22	39.72	19.34	20.70	2535	PP74	33.41	19.91	21.23	2841
PP24	45.66	19.35	18.46	2543	PP76	29.71	20.26	19.29	2828	PP24	45.75	19.32	20.71	2527	PP76	30.21	19.99	21.29	2840
PP26	51.75	19.35	18.49	2549	PP78	26.72	20.35	19.36	2816	PP26	51.95	19.28	20.71	2537	PP78	27.18	20.07	21.36	2829
PP28	58.00	19.35	18.52	2552	PP80	23.91	20.44	19.43	2823	PP28	58.31	19.25	20.71	2548	PP80	24.33	20.15	21.43	2838
PP30	64.41	19.34	18.45	2551	PP82	21.26	20.53	19.51	2806	PP30	64.84	19.21	20.60	2550	PP82	21.64	20.24	21.50	2837
PP32	70.97	19.32	18.46	2529	PP84	18.79	20.64	19.60	2788	PP32	71.54	19.16	20.58	2536	PP84	19.12	20.34	21.58	2818
PP34	77.68	19.30	18.46	2576	PP86	16.47	20.74	19.69	2794	PP34	78.41	19.12	20.56	2584	PP86	16.77	20.44	21.67	2826
PP36	84.56	19.28	18.45	2688	PP88	14.33	20.86	19.79	2787	PP36	85.43	19.08	20.53	2698	PP88	14.58	20.55	21.77	2822
PP38	91.64	19.26	18.58	2960	PP90	12.35	20.98	19.90	2769	PP38	92.67	19.04	20.64	2968	PP90	12.57	20.66	21.87	2800
PP40	98.80	19.23	18.41	4592	PP92	10.54	21.11	20.02	2774	PP40	99.99	19.00	20.46	4597	PP92	10.72	20.78	21.98	2806
PP44	100.35	19.25	18.44	4593	PP94	8.89	21.25	20.15	2764	PP44	101.64	19.00	20.47	4599	PP94	9.03	20.91	22.09	2797
PP46	94.73	19.31	18.64	2966	PP96	7.41	21.39	20.29	2741	PP46	95.97	19.06	20.67	2977	PP96	7.52	21.03	22.22	2773
PP48	89.19	19.36	18.55	2711	PP98	6.09	21.54	20.44	2744	PP48	90.38	19.11	20.57	2723	PP98	6.16	21.16	22.34	2776
PP50	83.87	19.41	18.59	2616	PP100	4.93	21.69	20.58	2732	PP50	85.00	19.16	20.62	2628	PP100	4.98	21.29	22.45	2763
PP52	78.70	19.46	18.63	2581	PP102	3.94	21.84	20.72	2706	PP52	79.78	19.21	20.66	2593	PP102	3.95	21.39	22.55	2740
PP54	73.68	19.52	18.65	2767	PP104	4.06	20.33	19.22	2707	PP54	74.70	19.26	20.67	2780	PP104	4.06	19.87	21.03	2736
PP56	68.83	19.58	18.69	2777	PP106	3.39	19.95	18.83	961	PP56	69.81	19.32	20.71	2790	PP106	3.37	19.42	20.58	1135
PP58	64.16	19.64	18.73	2786	PP108	2.79	19.28	18.15	946	PP58	65.09	19.38	20.75	2798	PP108	2.75	18.63	19.78	1115
PP60	59.65	19.70	18.77	2788	PP110	2.25	18.12	16.99	995	PP60	60.53	19.44	20.79	2801	PP110	2.20	17.28	18.43	1172
					PP112	SEE NOTE 5			749						PP112	SEE NOTE 5			893

NOTES:

1. Information provided corresponds to the DL cable and suspender profile, highway profile and cable control points.
2. Suspender length "L" is based on unstretched length and it is provided for quantity estimation purposes. See Note 10.
3. The force "F" is defined as the vertical component of the suspenders tension at the completion of construction. The force "F" is divided equally among the 4 parts of the suspender ropes. These forces correspond to the moment diagram shown in Chart A.
4. For location of cable at PP112, 114 & 116, see "Cable Bracket Details" sheets.
5. For the cable configuration shown no suspenders are installed at PP112. The cable is mounted to the girder using the details provided in "Cable Bracket Details" sheets. The Contractor shall develop his cable profile so as to generate at PP112 the force "F" given in the suspender schedule.
6. Angle Z accounts for the sag of the suspender due to its own weight.
7. Suspender lengths shown in the Suspender Schedule do not include camber for live load. The Contractor shall include live load camber in his fabricated suspender lengths. See "Camber Schedule" sheet.
8. Cable layout, deck profile and box girder dead load moment do not account for the future LRT SDL. When LRT SDL is added, readjustment of suspenders should be done to achieve the proper cable layout, deck profile and box girder DL moment. Readjustment of pier E2 bearings and Hinge A bearings may also have to be done.
9. For length, geometry, and tension of suspenders at tower, see "Suspenders at Tower Details No.4" sheet.

100% PS&E

DATE PLOTTED => 24 APR 2007 TIME PLOTTED => 11:32:00

USERNAME => ptram

ALL DIMENSIONS ARE IN MILLIMETERS UNLESS OTHERWISE SHOWN

R. Valizadeh/V. Toan/Y.L./W.L./F.C.
DESIGN OVERSIGHT
SIGN OFF DATE 04/16/07

	BY	CHECKED
DESIGN	M. Nader	S. Rodriguez
DETAILS	C. Mibelli	S. Rodriguez
QUANTITIES	C. Mibelli	G. Baker

PREPARED FOR THE STATE OF CALIFORNIA DEPARTMENT OF TRANSPORTATION

R. Manzanarez
PROJECT ENGINEER

BRIDGE NO. 34-0006L/R
KILOMETER POST 13.2/13.9

CU 04
EA 0120F1

SAN FRANCISCO OAKLAND BAY BRIDGE
EAST SPAN SEISMIC SAFETY PROJECT
SELF-ANCHORED SUSPENSION BRIDGE
(SUPERSTRUCTURE & TOWER)

SUSPENDER LAYOUT NO. 2

Rev. Date: 5-18-98

ORIGINAL SCALE IN MILLIMETERS FOR REDUCED PLANS 0 10 20 30 40 50 60 70 80 90 100

DISREGARD PRINTS BEARING EARLIER REVISION DATES →

REVISION DATES (PRELIMINARY STAGE ONLY): 01/15/99 | 05/13/99 | 08/06/99 | 05/14/01 | 04/08/02 | 07/17/02 | 12/19/02 | 07/18/03

SHEET 326R1 OF

FILE => i:\bb\04-0120f1\sas\contract plans and cco\cco\in progress\cco=37\dgn\cagsus03.dgn

MARK	DATE	DESCRIPTIONS	BY	CH'D	CCO#
		REVISIONS			
1	04/16/07	CABLE SYSTEM	GB	DT	37

CONTRACT CHANGE ORDER NO. 3750
SHEET 12 OF 24

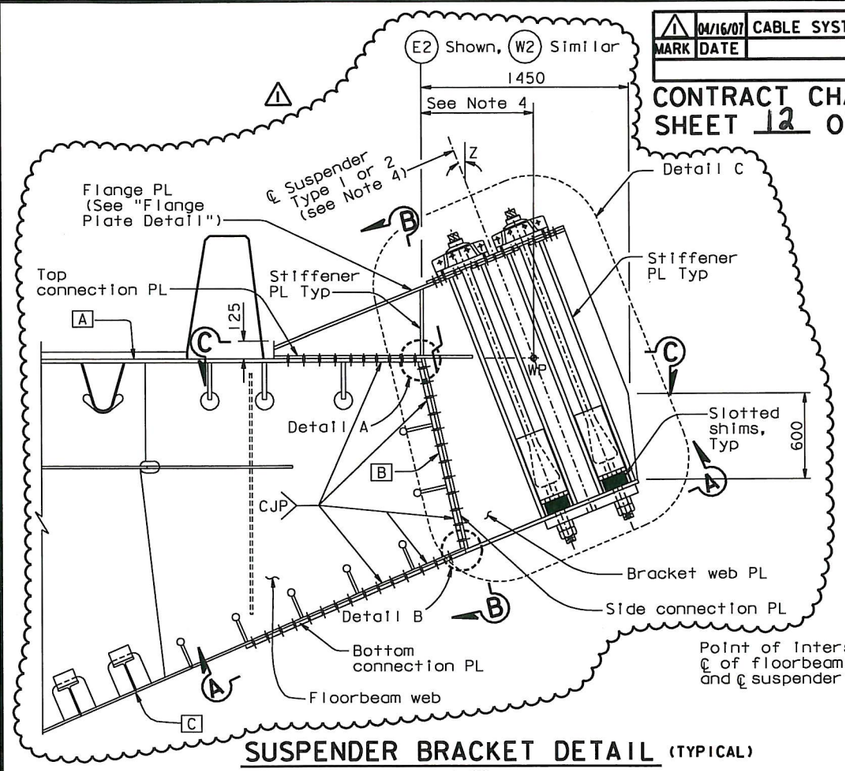

SUSPENDER BRACKET DETAIL (TYPICAL)
1:20

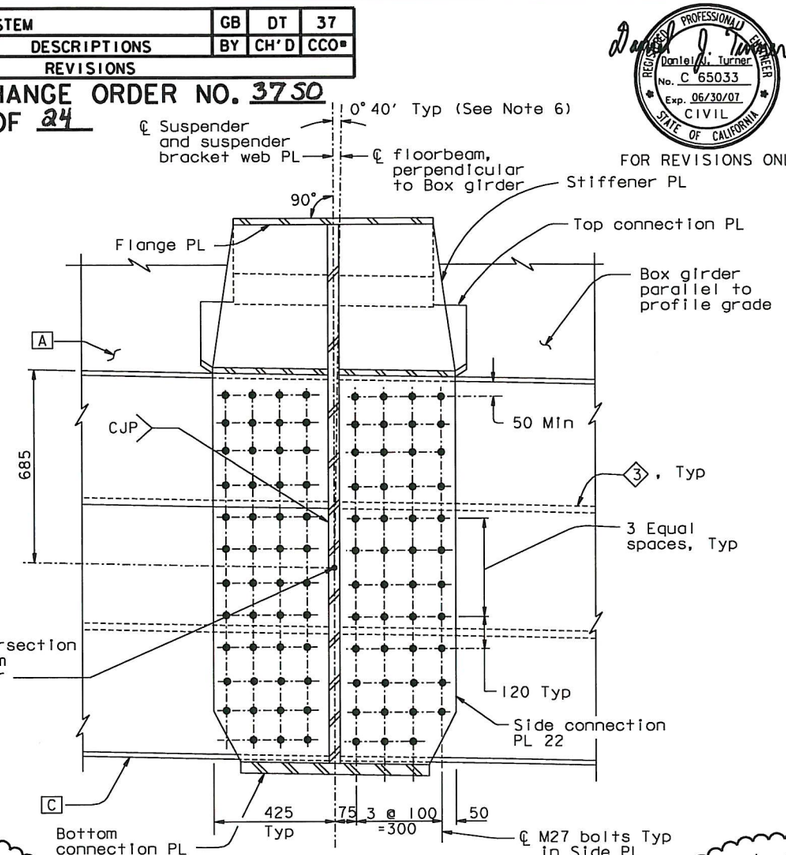

SECTION B-B
1:10

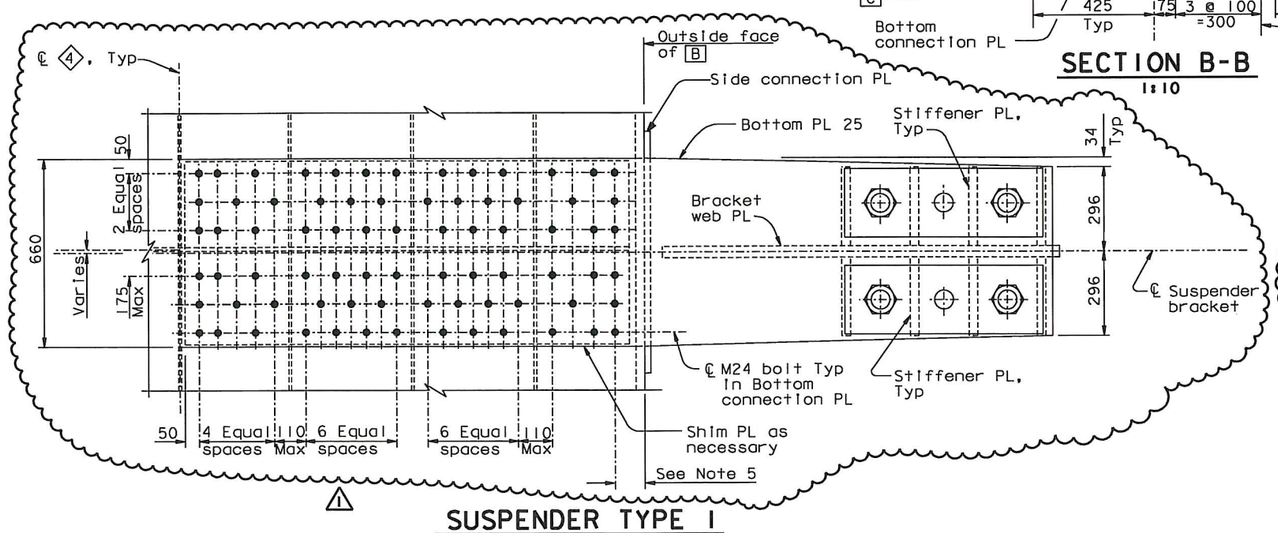

SUSPENDER TYPE 1

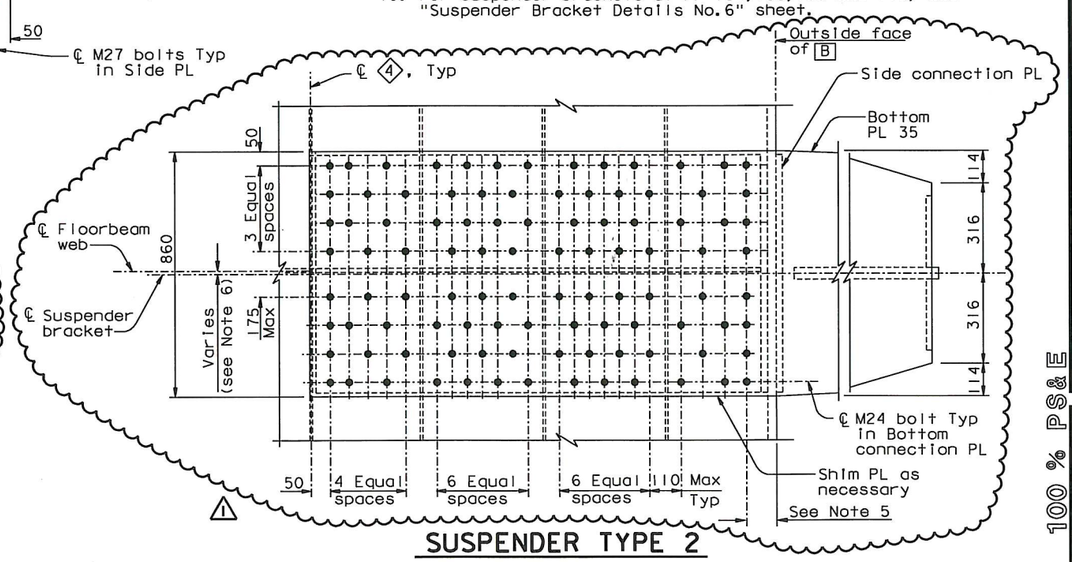

SUSPENDER TYPE 2

VIEW A-A
1:10

ALL DIMENSIONS ARE IN MILLIMETERS UNLESS OTHERWISE SHOWN

FOR REVISIONS ONLY

Daniel J. Turner — REGISTERED PROFESSIONAL ENGINEER — No. C 65033 — Exp. 06/30/07 CIVIL — STATE OF CALIFORNIA

LEGEND:

WP Working Point (see Note 4)

A Girder face designation

4 Girder stiffener type

NOTES:

1. For Section C-C, flange plate detail and shim detail, see "Suspender Bracket Details No. 2" sheet.
2. For Detail A and Detail B, see "Suspender Bracket Details No. 2" sheet.
3. For Detail C, see "Suspender Bracket Details No. 3" sheet.
4. For location of suspender types 1 and 2 and working point details, see "Suspender Layout" sheets.
5. For details of bottom connection not shown, see Detail B on "Suspender Bracket Details No. 2" sheet.
6. The Contractor shall consider variation in roadway grade in his details.
7. For "Suspender Bracket Details" sheets all bolts shall be detailed according to the Bolt Dimension Table. See "Typical Girder Details No. 1" sheet. All bolts are HS unless noted otherwise.
8. For "Suspender Bracket Details" sheets unless noted otherwise all fillet welds shall be 6 mm for plate sizes not greater than 20 mm. For plates greater than 20 mm fillet welds shall be 8 mm, unless noted otherwise.
9. For layout and other details of suspenders at tower PP42, see "Suspenders At Tower Details" sheets.
10. For suspender brackets at PP 104, 106, 108 and 110, see "Suspender Bracket Details No. 6" sheet.

Caltrans Metric

DIST.	COUNTY	ROUTE	KILOMETER POST TOTAL PROJECT	SHEET NO.	TOTAL SHEETS
04	SF	80	13.2/13.9	747R1	1204

George Baker
REGISTERED ENGINEER - CIVIL
12-6-04
PLANS APPROVAL DATE

REGISTERED PROFESSIONAL ENGINEER — George S. Baker — No. C 57112 — Exp. 12/31/05 CIVIL — STATE OF CALIFORNIA

The State of California or its officers or agents shall not be responsible for the accuracy or completeness of electronic copies of this plan sheet.

T.Y. LIN / MOFFATT & NICHOL
825 BATTERY STREET
SAN FRANCISCO, CA 94111

Caltrans now has a web site! To get to the web site, go to: http://www.dot.ca.gov

DESIGN	BY G. Baker	CHECKED	T. McMeans
DETAILS	BY S. Camo	CHECKED	P. Ritchie
QUANTITIES	BY C. Mauch	CHECKED	C. Mibelli

R. Valizadeh/V. Toan/Y.L./W.L./F.C.
DESIGN OVERSIGHT
SIGN OFF DATE 04/16/07

Rev. Date: 5-18-98

ORIGINAL SCALE IN MILLIMETERS FOR REDUCED PLANS 0 10 20 30 40 50 60 70 80 90 100

PREPARED FOR THE STATE OF CALIFORNIA DEPARTMENT OF TRANSPORTATION

R. Manzanarez
PROJECT ENGINEER

CU 04
EA 0120F1

BRIDGE NO. 34-0006L/R
KILOMETER POST 13.2/13.9

SAN FRANCISCO OAKLAND BAY BRIDGE
EAST SPAN SEISMIC SAFETY PROJECT
SELF-ANCHORED SUSPENSION BRIDGE
(SUPERSTRUCTURE & TOWER)

SUSPENDER BRACKET DETAILS NO. 1

DISREGARD PRINTS BEARING EARLIER REVISION DATES →

REVISION DATES (PRELIMINARY STAGE ONLY): 05/15/98 | 08/27/99 | 05/17/01 | 04/26/02 | 07/17/02 | 12/19/02

SHEET 330R1 OF

FILE => I:\bb\04-012001\sas\contract plans and cco\cco\In progress\cco#37\dgn\cagsad11.dgn

USERNAME => ptom
DATE PLOTTED => 29 AUG 2007
TIME PLOTTED => 16:31:44
100 % PS&E

DIST.	COUNTY	ROUTE	KILOMETER POST TOTAL PROJECT	SHEET NO.	TOTAL SHEETS
04	SF	80	13.2/13.9	748R1	1204

George Baker
REGISTERED ENGINEER - CIVIL

12-6-04
PLANS APPROVAL DATE

The State of California or its officers or agents shall not be responsible for the accuracy or completeness of electronic copies of this plan sheet.

REGISTERED PROFESSIONAL ENGINEER — George S. Baker — No. C 57112 — Exp. 12/31/05 — CIVIL — STATE OF CALIFORNIA

T.Y. LIN / MOFFATT & NICHOL
825 BATTERY STREET
SAN FRANCISCO, CA 94111

Caltrans now has a web site! To get to the web site, go to: http://www.dot.ca.gov

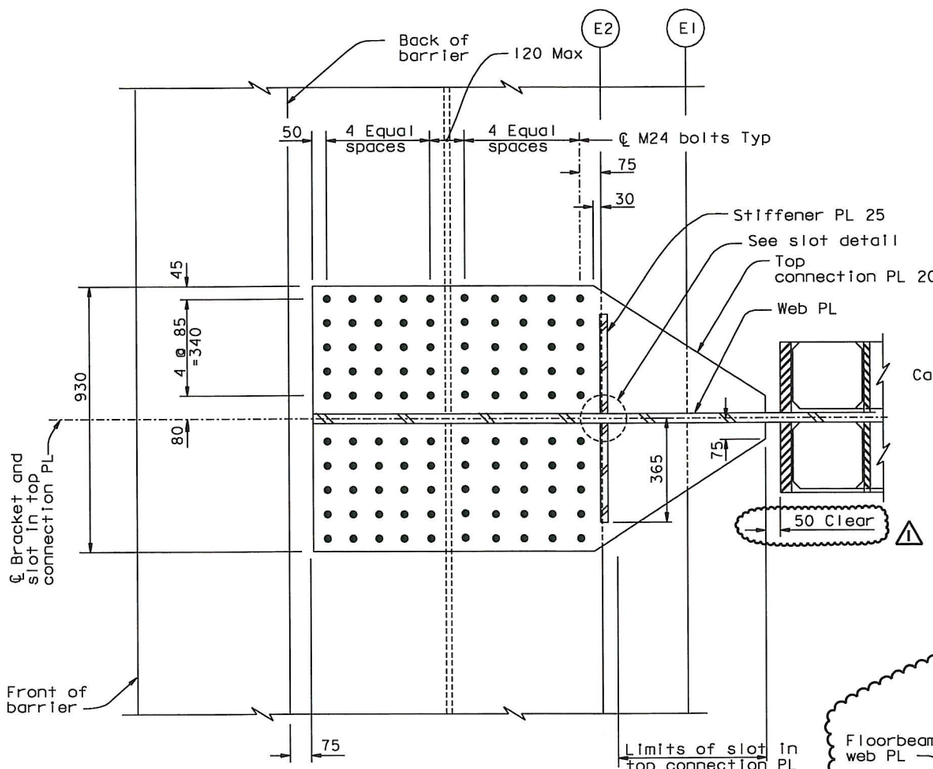

SECTION C-C
1:10

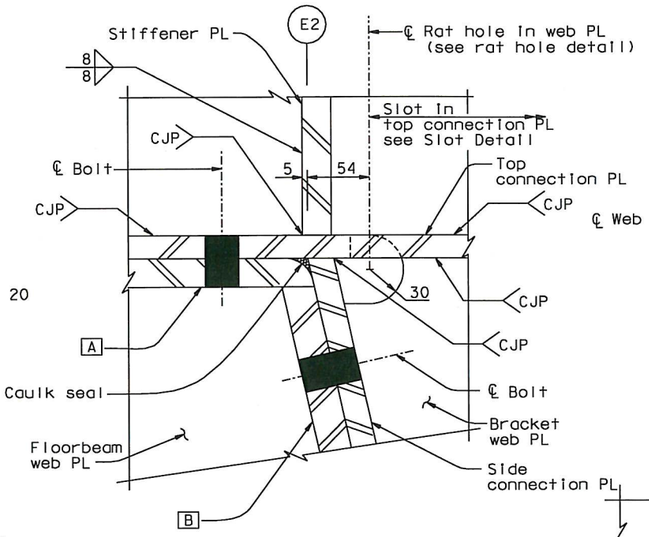

DETAIL A
1:2.5

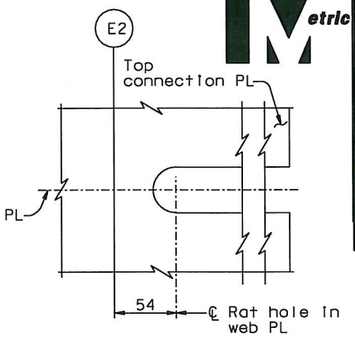

TOP CONNECTION PL SLOT DETAIL
1:2.5

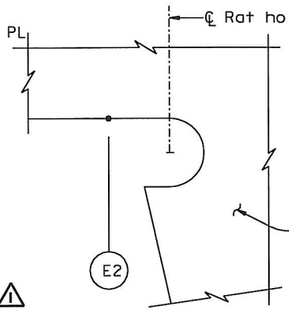

RAT HOLE DETAIL
1:2.5

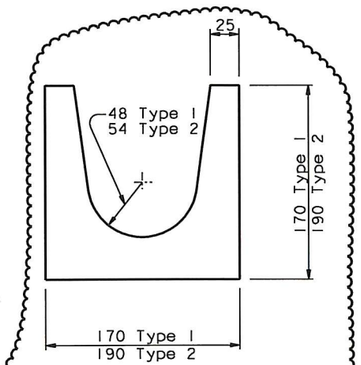

SLOTTED SHIM DETAIL
1:2.5
(see Note 5)

DETAIL B
1:2.5

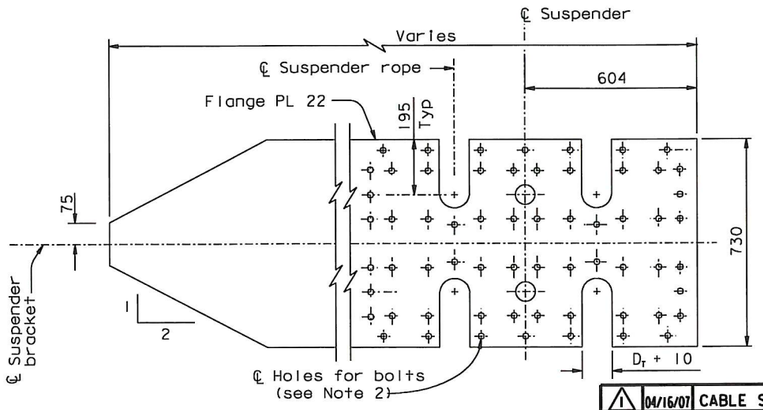

FLANGE PLATE DETAIL
1:10

NOTES:
1. For location of suspender types 1 and 2, see "Suspender Layout" sheets.
2. For flange plate bolt pattern, see "Suspender Bracket Details No. 4" sheet.
3. For suspender socket details, see "Suspender Socket Details" sheet.
4. The bend in the bottom connection PL shall be centered on the side connection PL.
5. For other shim notes see "Suspender Bracket Details No. 3" sheet.
6. For weld size see "Suspender Bracket Details No. 3" sheet.

Daniel J. Turner — REGISTERED PROFESSIONAL ENGINEER — Daniel J. Turner — No. C 65033 — Exp. 06/30/07 — CIVIL — STATE OF CALIFORNIA

FOR REVISIONS ONLY

LEGEND:
D_T = Diameter of Opening at top of Suspender Socket (see Note 3)

MARK	DATE	DESCRIPTIONS	BY	CH'D	CCO#
1	04/16/07	CABLE SYSTEM	GB	DT	37
		REVISIONS			

CONTRACT CHANGE ORDER NO. 3750
SHEET 13 OF 24

ALL DIMENSIONS ARE IN MILLIMETERS UNLESS OTHERWISE SHOWN

100 % PS&E

DATE PLOTTED => 13 AUG 2007 TIME PLOTTED => 10:35:01
USERNAME => ptom

DESIGN	BY G. Baker	CHECKED T. McMeans	
DETAILS	BY S. Camo	CHECKED P. Ritchie	
QUANTITIES	BY C. Mauch	CHECKED C. Mibelli	

R. Valizadeh/V. Toan/Y.L./W.L./F.C.
DESIGN OVERSIGHT
SIGN OFF DATE 04/16/07

PREPARED FOR THE STATE OF CALIFORNIA
DEPARTMENT OF TRANSPORTATION

R. Manzanarez
PROJECT ENGINEER

CU 04
EA 0120F1

BRIDGE NO. 34-0006L/R
KILOMETER POST 13.2/13.9

SAN FRANCISCO OAKLAND BAY BRIDGE
EAST SPAN SEISMIC SAFETY PROJECT
SELF-ANCHORED SUSPENSION BRIDGE (SUPERSTRUCTURE & TOWER)

SUSPENDER BRACKET DETAILS NO. 2

DISREGARD PRINTS BEARING EARLIER REVISION DATES →

REVISION DATES (PRELIMINARY STAGE ONLY)									SHEET	OF
05/15/99	09/27/99	05/31/01	04/08/02	07/01/02	12/19/02				331R	

Rev. Date: 5-18-98

ORIGINAL SCALE IN MILLIMETERS FOR REDUCED PLANS 0 10 20 30 40 50 60 70 80 90 100

FILE => I:\bb\04-012001\sas\contract plans and cco\cco\in progress\cco#37\dgn\cagsad11.dgn

MARK	DATE	DESCRIPTIONS	BY	CH'D	CCO#
		REVISIONS			
1	04/16/07	CABLE SYSTEM	GB	DT	37

CONTRACT CHANGE ORDER NO. 37 SO
SHEET 14 OF 24

DIST.	COUNTY	ROUTE	KILOMETER POST TOTAL PROJECT	SHEET NO.	TOTAL SHEETS
04	SF	80	13.2/13.9	749R1	1204

George Baker
REGISTERED ENGINEER - CIVIL
12-6-04
PLANS APPROVAL DATE

REGISTERED PROFESSIONAL ENGINEER
George S. Baker
No. C 57112
Exp. 12/31/05
CIVIL
STATE OF CALIFORNIA

The State of California or its officers or agents shall not be responsible for the accuracy or completeness of electronic copies of this plan sheet.

T.Y. LIN / MOFFATT & NICHOL
825 BATTERY STREET
SAN FRANCISCO, CA 94111

Caltrans now has a web site! To get to the web site, go to: http://www.dot.ca.gov

Daniel J. Turner
REGISTERED PROFESSIONAL ENGINEER
Daniel J. Turner
No. C 65033
Exp. 06/30/07
CIVIL
STATE OF CALIFORNIA
FOR REVISIONS ONLY

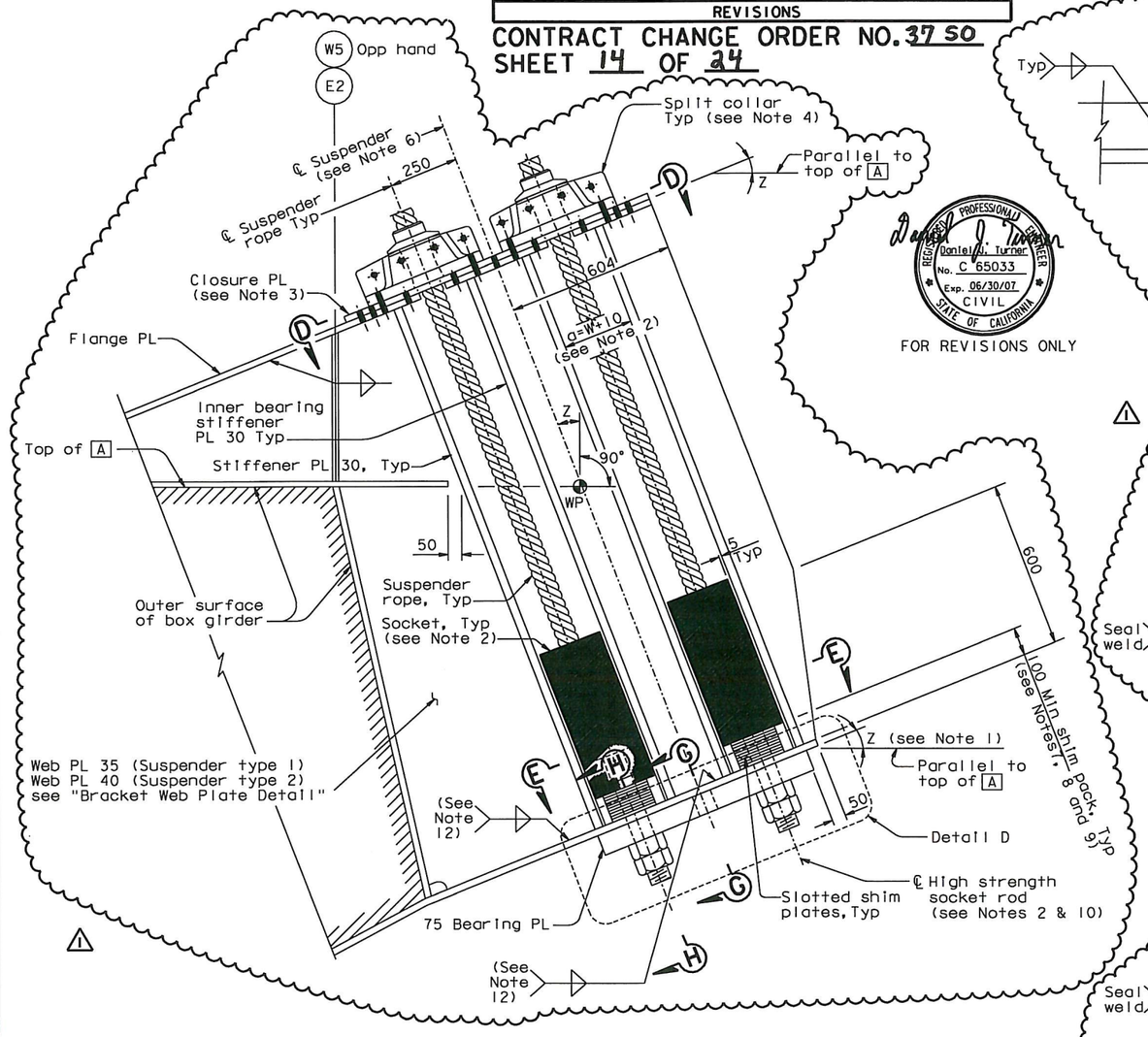

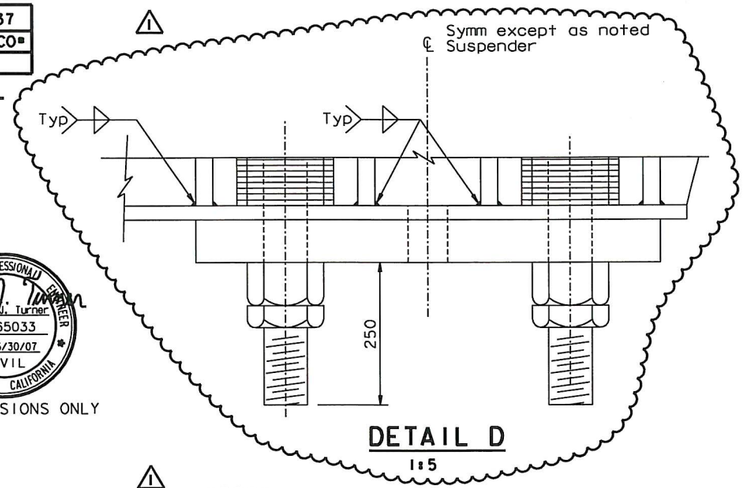

DETAIL D
1:5

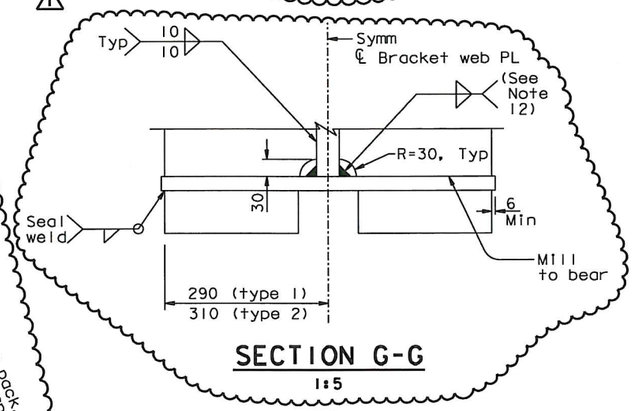

SECTION G-G
1:5

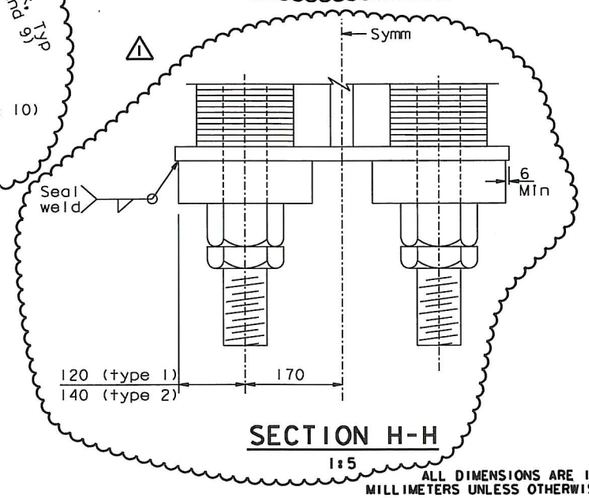

SECTION H-H
1:5

4 SUSPENDER ANCHORAGE
DETAIL C
1:10

4 REVISED PER ADDENDUM NO. 4 DATED DECEMBER 9, 2005

LEGEND:

W	Width of Suspender Socket Base
Y	Total thickness of shim plates and anchor plate
	Suspender Socket (see Note 2)
WP	Working Point (see Note 5)
A	Girder Face A

NOTES:

1. For Z and location of suspender types 1 and 2, see "Suspender Layout" sheets. Angles Z are measured with respect to the top of A.
2. For suspender socket details, see "Suspender Socket Details" sheet.
3. For closure plate details, see "Suspender Bracket Details No. 4" sheet.
4. For split collar details, see "Suspender Bracket Details No. 5" sheet.
5. For Working Point details, see "Suspender Layout No. 1" sheet.
6. Suspender ℄ varies with bracket location. Cutouts and bolts in flange PL shall be placed with respect to suspender ℄.
7. The Contractor shall provide the specified shim pack thickness for erection adjustment as directed by the Engineer, and to provide future tension adjustment for a LRT. The Contractor may add additional shims as part of his fabrication methods, subject to approval by the Engineer.
8. 150 mm shim pack shall be provided at PP70 through PP102.
9. Shim plate thickness shall be 10 mm each.
10. The diameter of holes in bearing plate for socket rods shall be 4 mm greater than the rod diameter.
11. Socket rods shall be prestressed to 0.5 Fy.
12. Fillet weld size shall be 10 mm for type 1 suspender brackets and shall be 15 mm for type 2 suspender brackets.

ALL DIMENSIONS ARE IN MILLIMETERS UNLESS OTHERWISE SHOWN

100 % PS&E

DATE PLOTTED => 21 MAY 2007
TIME PLOTTED => 11:46:14
USERNAME => ptom

R. Valizadeh/V. Toan/Y.L./W.L./F.C.
DESIGN OVERSIGHT
SIGN OFF DATE 04/16/07

	BY	CHECKED
DESIGN	G. Baker	T. McMeans
DETAILS	S. Camo	P. Ritchie
QUANTITIES	C. Mauch	C. Mibelli

PREPARED FOR THE STATE OF CALIFORNIA
DEPARTMENT OF TRANSPORTATION

R. Manzanarez
PROJECT ENGINEER

BRIDGE NO.	34-0006L/R
KILOMETER POST	13.2/13.9

SAN FRANCISCO OAKLAND BAY BRIDGE
EAST SPAN SEISMIC SAFETY PROJECT
SELF-ANCHORED SUSPENSION BRIDGE (SUPERSTRUCTURE & TOWER)
SUSPENDER BRACKET DETAILS NO. 3

Rev. Date: 5-18-98

ORIGINAL SCALE IN MILLIMETERS FOR REDUCED PLANS 0 10 20 30 40 50 60 70 80 90 100

CU 04
EA 0120F1

DISREGARD PRINTS BEARING EARLIER REVISION DATES

REVISION DATES (PRELIMINARY STAGE ONLY)									SHEET	OF
05/15/98	08/28/98	05/27/01	04/08/02	07/31/02	12/13/02	11/13/05			332R1	

FILE => I:\bb\04-01200l\sas\contract plans and cco\cco\in progress\cco=37\dgn\cagsad12.dgn

Caltrans now has a web site! To get to the web site, go to: http://www.dot.ca.gov

DIST.	COUNTY	ROUTE	KILOMETER POST TOTAL PROJECT	SHEET NO.	TOTAL SHEETS
04	SF	80	13.2/13.9	750R1	1204

Caltrans Metric

George Baker
REGISTERED ENGINEER - CIVIL
12-6-04
PLANS APPROVAL DATE

REGISTERED PROFESSIONAL ENGINEER — George S. Baker — No. C 57112 — Exp. 12/31/05 — CIVIL — STATE OF CALIFORNIA

The State of California or its officers or agents shall not be responsible for the accuracy or completeness of electronic copies of this plan sheet.

T.Y. LIN / MOFFATT & NICHOL
825 BATTERY STREET
SAN FRANCISCO, CA 94111

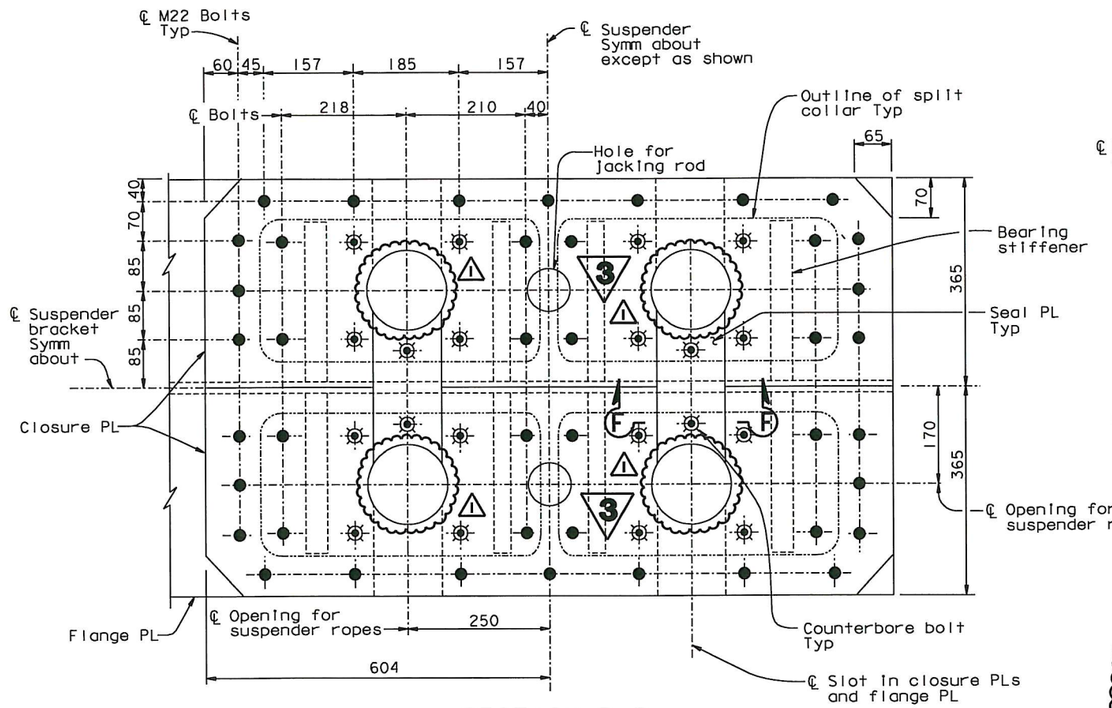

SECTION D-D
1:5

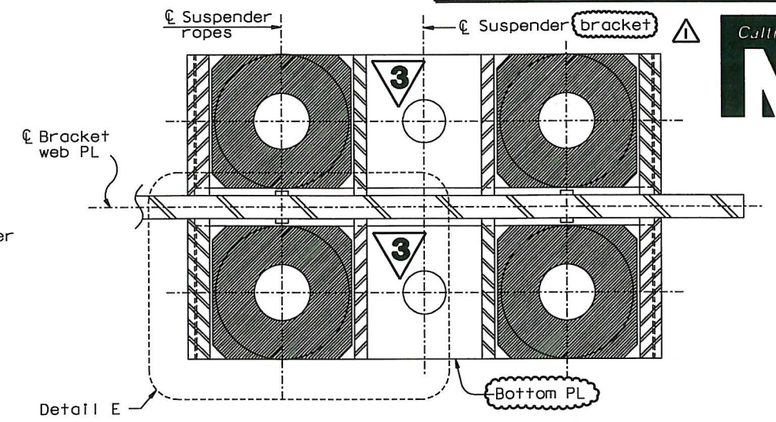

SECTION E-E
1:5

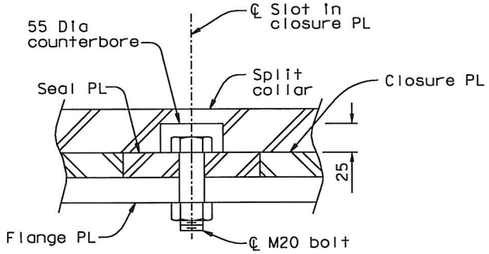

SECTION F-F
1:2.5

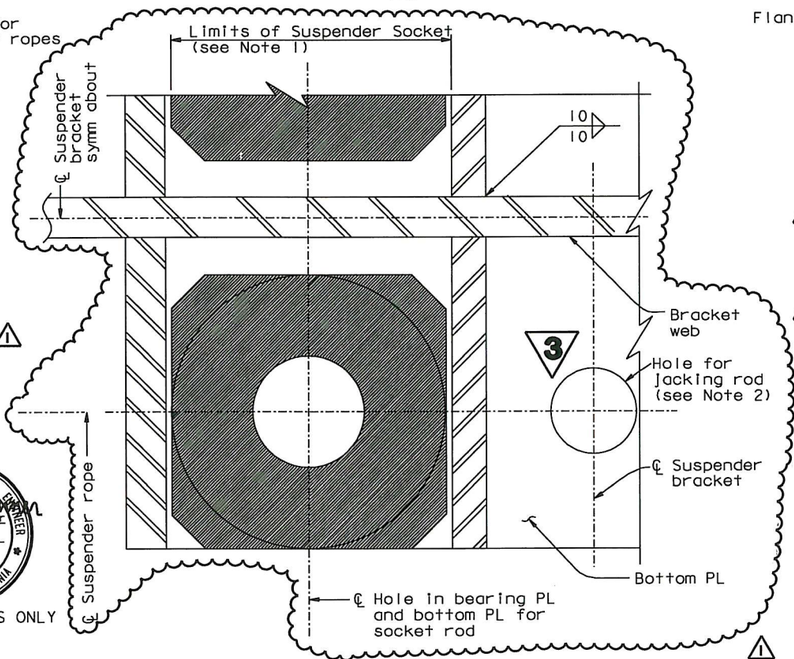

DETAIL E
1:2.5

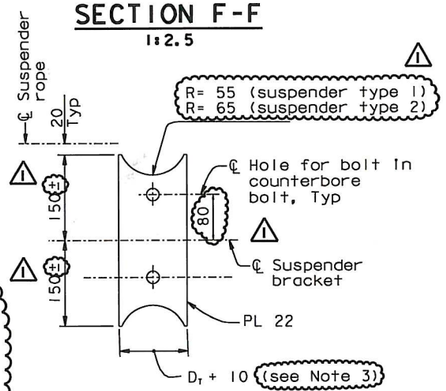

SEAL PLATE DETAIL
1:5

CLOSURE PLATE DETAIL
1:5

Note: Zero gap between closure plates at the centerline

365

Daniel J. Turner — REGISTERED PROFESSIONAL ENGINEER — Daniel J. Turner — No. C 65033 — Exp. 06/30/07 — CIVIL — STATE OF CALIFORNIA

FOR REVISIONS ONLY

LEGEND:

- D_T = Diameter of Opening at Top of Suspender Socket (see Note 1)
- W = Width of Suspender Socket Base (see Note 1)
- Suspender Socket (see Note 1)

NOTES:

1. For suspender socket details, see "Suspender Socket Details" sheet.
2. Jacking rod holes are to be provided for future suspender shimming and replacement. Holes shall have 75 mm diameter for type 1 suspender brackets and 95 mm diameter for type 2 suspender brackets. The Contractor may use these holes in his operations and provide additional holes, subject to review and approval by the Engineer. Additional holes shall be plugged by means approved by the Engineer.
3. The seal plate may be fabricated at a width reduced by 2 mm, provided that the seal plate is seated with caulk in the gap with the closure plate.

MARK	DATE	DESCRIPTIONS	BY	CH'D	CCO#
		REVISIONS			
1	04/16/07	CABLE SYSTEM	GB	DT	37

CONTRACT CHANGE ORDER NO. 37 SO
SHEET 15 OF 24

3 REVISED PER ADDENDUM NO. 3 DATED NOVEMBER 7, 2005

ALL DIMENSIONS ARE IN MILLIMETERS UNLESS OTHERWISE SHOWN

DESIGN	G. Baker	T. McMeans	PREPARED FOR THE STATE OF CALIFORNIA DEPARTMENT OF TRANSPORTATION
DETAILS	S. Camo	P. Ritchie	
QUANTITIES	C. Mauch	C. Mibelli	

R. Valizadeh/V. Toan/Y.L./W.L./F.C.
DESIGN OVERSIGHT
SIGN OFF DATE 04/16/07

R. Manzanarez
PROJECT ENGINEER

CU 04
EA 0120F1

BRIDGE NO. 34-0006L/R
KILOMETER POST 13.2/13.9

SAN FRANCISCO OAKLAND BAY BRIDGE
EAST SPAN SEISMIC SAFETY PROJECT
SELF-ANCHORED SUSPENSION BRIDGE (SUPERSTRUCTURE & TOWER)
SUSPENDER BRACKET DETAILS NO. 4

DISREGARD PRINTS BEARING EARLIER REVISION DATES →
REVISION DATES (PRELIMINARY STAGE ONLY): 05/30/99 | 05/30/01 | 05/30/02 | 01/30/02 | 12/30/02 | 10/13/05
SHEET 333R1 OF

Rev. Date: 5-18-98

ORIGINAL SCALE IN MILLIMETERS FOR REDUCED PLANS 0 10 20 30 40 50 60 70 80 90 100

FILE -> I:\bb\04-012001\sas\contract plans and cco\cco\In progress\cco#37\dgn\cagsad12a.dgn

USERNAME -> pfam DATE PLOTTED -> 24 APR 2007 TIME PLOTTED -> 11:37:03

100 % PS&E

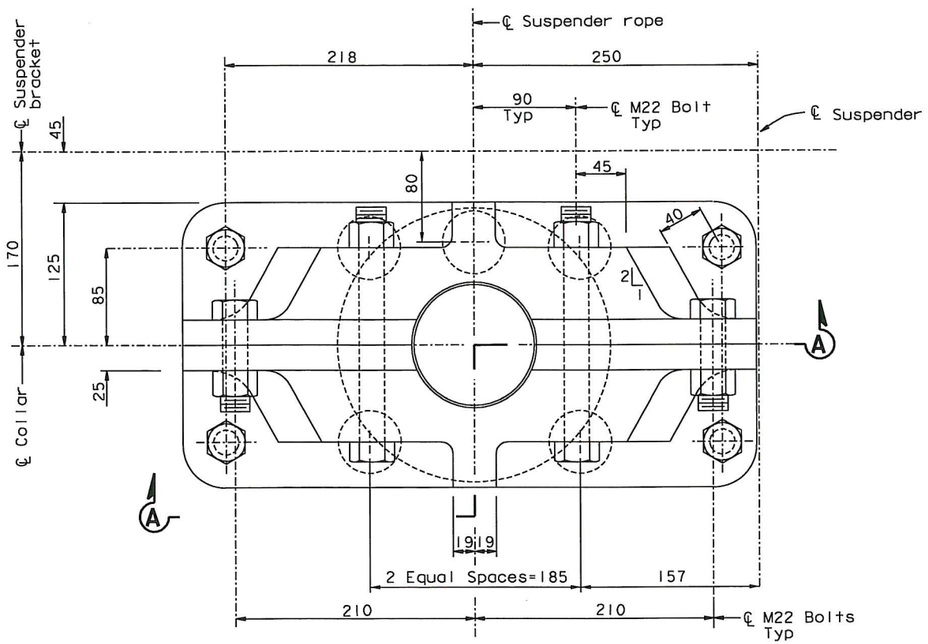

PLAN

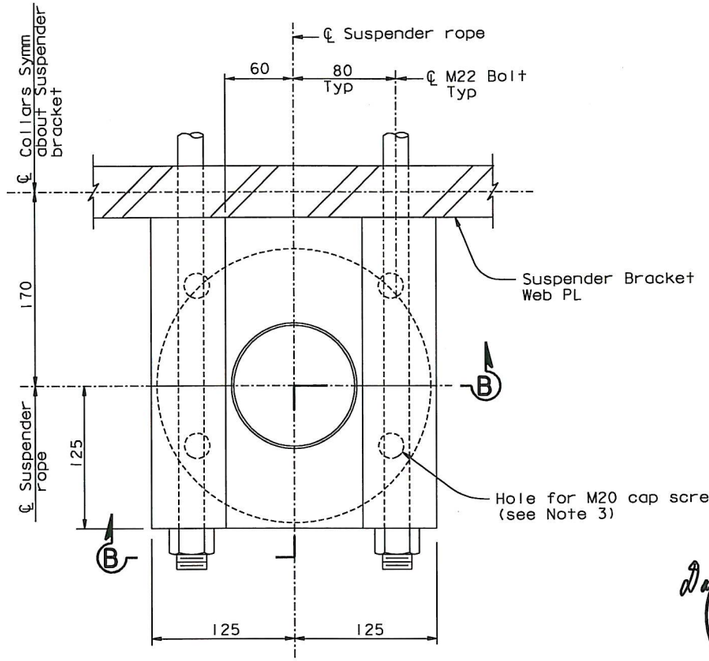

PLAN

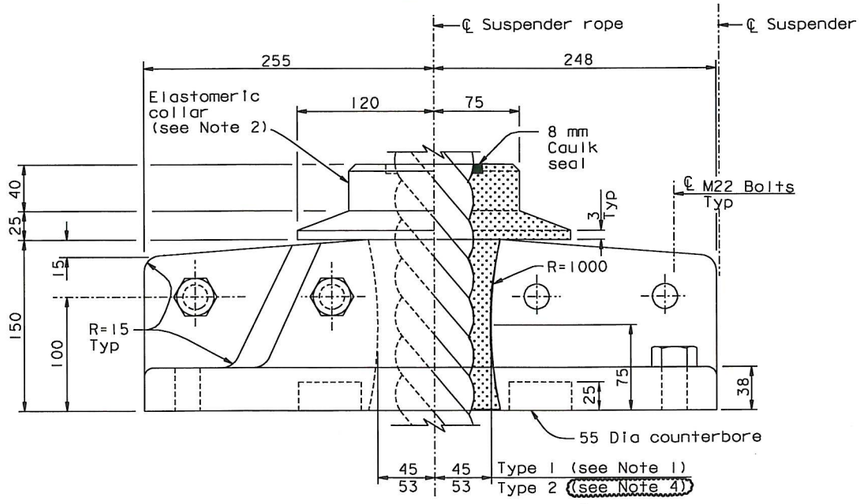

ELEVATION A-A

SPLIT COLLAR DETAIL

1:2.5

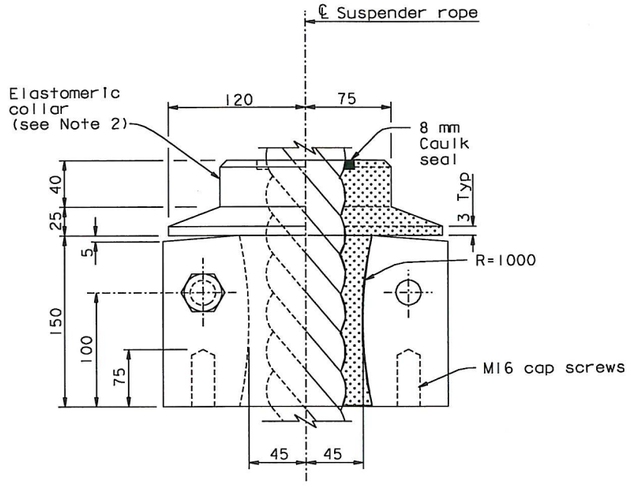

ELEVATION B-B

SPLIT COLLAR DETAIL

AT PANEL POINTS 104 TO 110

1:2.5

DIST.	COUNTY	ROUTE	KILOMETER POST TOTAL PROJECT	SHEET NO.	TOTAL SHEETS
04	SF	80	13.2/13.9	751R1	1204

George Baker
REGISTERED ENGINEER - CIVIL

12-6-04
PLANS APPROVAL DATE

REGISTERED PROFESSIONAL ENGINEER — George S. Baker — No. C 57112 — Exp. 12/31/05 — CIVIL — STATE OF CALIFORNIA

The State of California or its officers or agents shall not be responsible for the accuracy or completeness of electronic copies of this plan sheet.

T.Y. LIN / MOFFATT & NICHOL
825 BATTERY STREET
SAN FRANCISCO, CA 94111

Caltrans now has a web site! To get to the web site, go to: http://www.dot.ca.gov

REGISTERED PROFESSIONAL ENGINEER — Daniel J. Turner — No. C 65033 — Exp. 06/30/07 — CIVIL — STATE OF CALIFORNIA

FOR REVISIONS ONLY

MARK	DATE	DESCRIPTIONS	BY	CH'D	CCO#
		REVISIONS			
1	04/16/07	CABLE SYSTEM	GB	DT	37

CONTRACT CHANGE ORDER NO. 37 SO
SHEET 16 OF 24

LEGEND:

Elastomeric collar in section

NOTES:

1. For location of suspender types, see "Suspender Layout No. 1" sheet.
2. Elastomeric collars shall be polyurethane, durometer 60, molded to fit suspender ropes.
3. Holes shall match those of seat plate detail, see "Suspender Bracket No. 6" sheet.
4. Collar dimension shown is for a 90 mm suspender rope size. If larger rope size is used, the dimension shall be equal to the rope radius plus 8 mm.

ALL DIMENSIONS ARE IN MILLIMETERS UNLESS OTHERWISE SHOWN

100 % PS&E

DATE PLOTTED => 24 APR 2007 TIME PLOTTED => 11:38:08

USERNAME => dtom

R. Valizadeh/V. Toan/Y.L./W.L./F.C.
DESIGN OVERSIGHT
SIGN OFF DATE 04/16/07

	BY	CHECKED
DESIGN	G. Baker	T. McMeans
DETAILS	S. Camo	P. Ritchie
QUANTITIES	C. Mauch	C. Mbell

PREPARED FOR THE STATE OF CALIFORNIA DEPARTMENT OF TRANSPORTATION

R. Manzanarez
PROJECT ENGINEER

BRIDGE NO. 34-0006L/R
KILOMETER POST 13.2/13.9

SAN FRANCISCO OAKLAND BAY BRIDGE
EAST SPAN SEISMIC SAFETY PROJECT
SELF-ANCHORED SUSPENSION BRIDGE (SUPERSTRUCTURE & TOWER)

SUSPENDER BRACKET DETAILS NO. 5

Rev. Date: 5-18-98

ORIGINAL SCALE IN MILLIMETERS FOR REDUCED PLANS 0 10 20 30 40 50 60 70 80 90 100

CU 04
EA 0120F1

DISREGARD PRINTS BEARING EARLIER REVISION DATES

REVISION DATES (PRELIMINARY STAGE ONLY)									SHEET	OF
05/15/98	08/07/98	05/27/01	04/08/02	07/01/02	12/19/02				334R1	

FILE => I:\bb\04-0120I\sas\contract plans and cco\cco\in progress\cco#37\dgn\cagsad12b.dgn

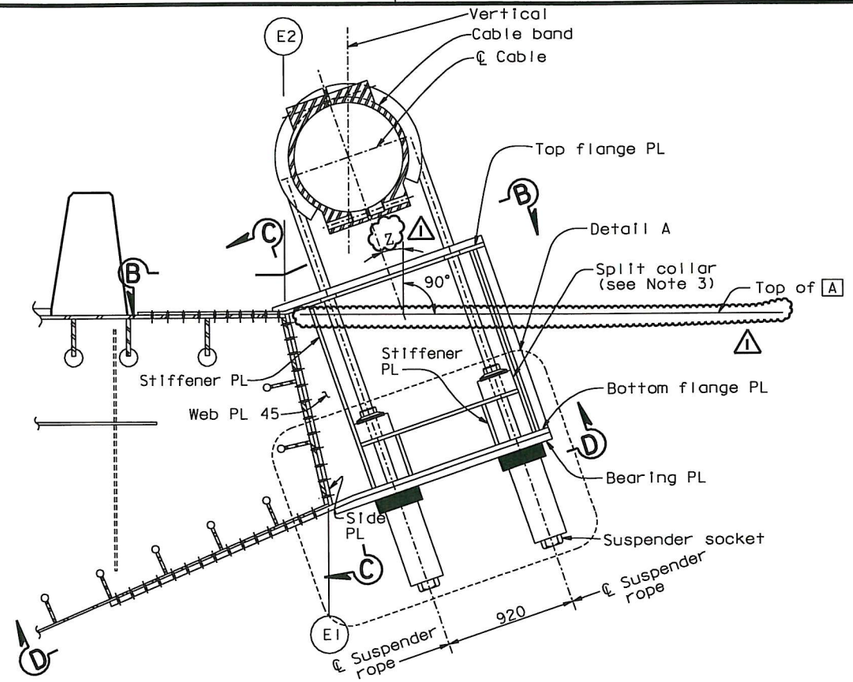

ELEVATION

SUSPENDER BRACKET AT PP 104, 106, 108, 110

1:20

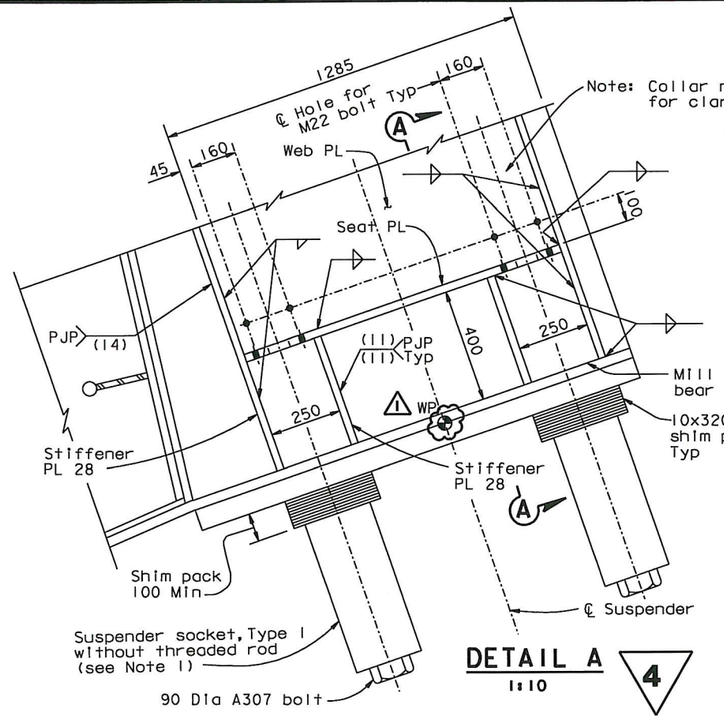

DETAIL A

1:10

4

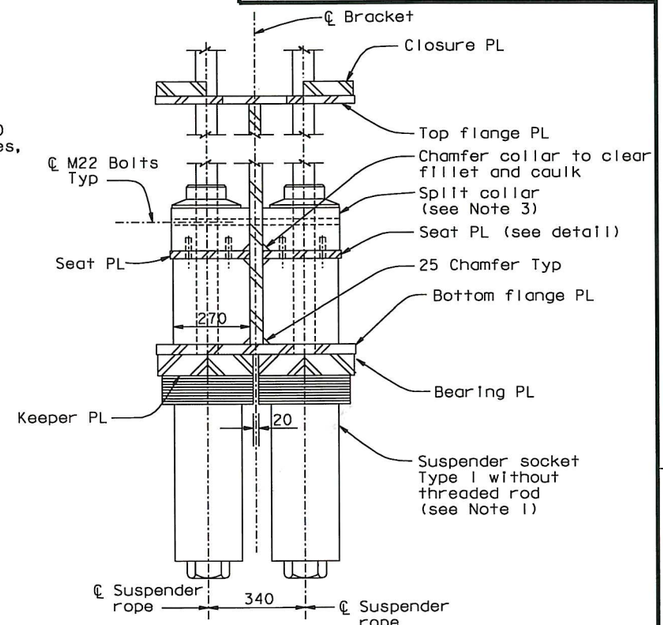

SECTION A-A

1:10

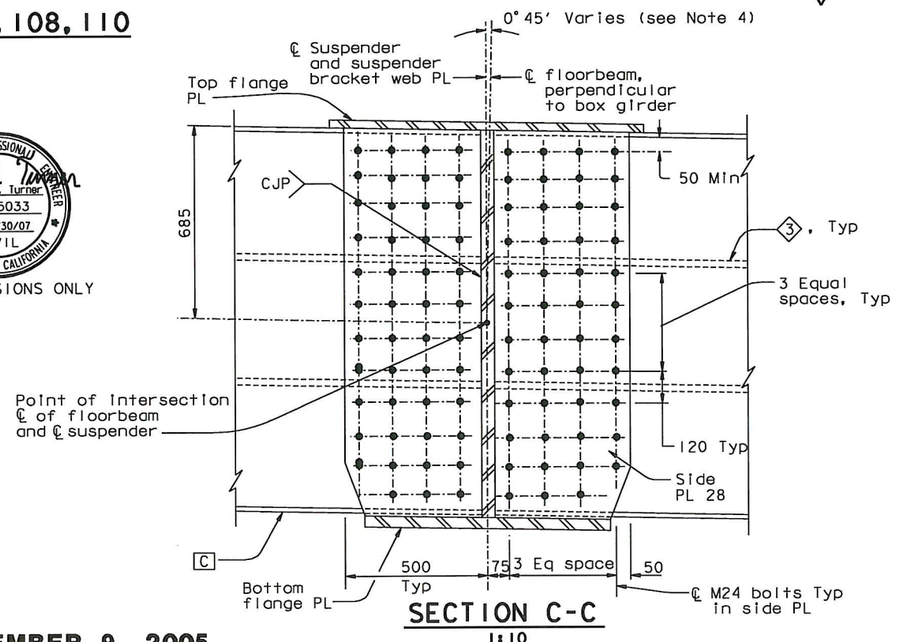

SECTION C-C

1:10

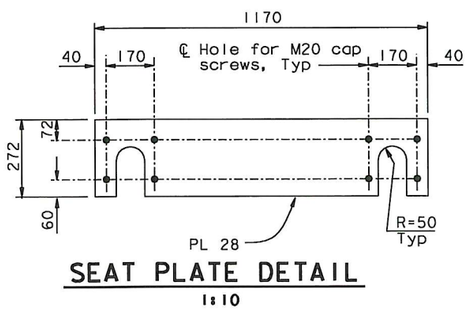

SEAT PLATE DETAIL

1:10

LEGEND:

3 Girder stiffener Type 3

C Girder face C

NOTES:

1. Threaded rod may be used for erection. After installation of suspender socket, ends shall be sealed with 90 Dia A307 bolts.
2. For details not shown, see "Suspender Bracket Details No.1" through "Suspender Bracket Details No.3" sheets.
3. For split collar details, see "Suspender Bracket Details No.5" sheet.
4. The Contractor shall consider variation in roadway grade in his details.

DIST.	COUNTY	ROUTE	KILOMETER POST TOTAL PROJECT	SHEET NO.	TOTAL SHEETS
04	SF	80	13.2/13.9	752R1	1204

George Baker
REGISTERED ENGINEER - CIVIL

12-6-04
PLANS APPROVAL DATE

The State of California or its officers or agents shall not be responsible for the accuracy or completeness of electronic copies of this plan sheet.

REGISTERED PROFESSIONAL ENGINEER — George S. Baker, No. C 57112, Exp. 12/31/05, CIVIL, STATE OF CALIFORNIA

T.Y. LIN / MOFFATT & NICHOL
825 BATTERY STREET
SAN FRANCISCO, CA 94111

Caltrans now has a web site! To get to the web site, go to: http://www.dot.ca.gov

Caltrans Metric

MARK	DATE	DESCRIPTIONS	BY	CH'D	CCO#
		REVISIONS			
1	04/16/07	CABLE SYSTEM	GB	DT	37

CONTRACT CHANGE ORDER NO. 3750
SHEET 17 OF 24

REGISTERED PROFESSIONAL ENGINEER — Daniel J. Turner, No. C 65033, Exp. 06/30/07, CIVIL, STATE OF CALIFORNIA

FOR REVISIONS ONLY

4 REVISED PER ADDENDUM NO. 4 DATED DECEMBER 9, 2005

ALL DIMENSIONS ARE IN MILLIMETERS UNLESS OTHERWISE SHOWN

SAN FRANCISCO OAKLAND BAY BRIDGE
EAST SPAN SEISMIC SAFETY PROJECT
SELF-ANCHORED SUSPENSION BRIDGE
(SUPERSTRUCTURE & TOWER)

SUSPENDER BRACKET DETAILS NO. 6

R. Valizadeh/V. Toan/Y.L./W.L./F.C.
DESIGN OVERSIGHT
SIGN OFF DATE 04/16/07

	BY	CHECKED
DESIGN	G. Baker	T. McMeans
DETAILS	S. Camo	P. Ritchie
QUANTITIES	C. Mauch	C. Mbelli

PREPARED FOR THE STATE OF CALIFORNIA
DEPARTMENT OF TRANSPORTATION

R. Manzanarez
PROJECT ENGINEER

BRIDGE NO. 34-0006L/R
KILOMETER POST 13.2/13.9

CU 04
EA 0120F1

DISREGARD PRINTS BEARING EARLIER REVISION DATES

REVISION DATES (PRELIMINARY STAGE ONLY): 01/05/99 | 05/25/99 | 05/24/01 | 04/08/02 | 07/09/02 | 12/09/02 | 11/15/05

SHEET 335R1 OF

Rev. Date: 5-18-98

ORIGINAL SCALE IN MILLIMETERS FOR REDUCED PLANS 0 10 20 30 40 50 60 70 80 90 100

FILE => I:\bb\04-012001\sas\contract plans and cco\cco\In progress\cco#37\dgn\cagsad13.dgn

100% PS&E
DATE PLOTTED => 24 APR 2007
TIME PLOTTED => 11:39:16
USERNAME => dtom

DIST.	COUNTY	ROUTE	KILOMETER POST TOTAL PROJECT	SHEET NO.	TOTAL SHEETS
04	SF	80	13.2/13.9	753R1	1204

Caltrans Metric

George Baker
REGISTERED ENGINEER - CIVIL
12-6-04
PLANS APPROVAL DATE

REGISTERED PROFESSIONAL ENGINEER George S. Baker No. C 57112 Exp. 12/31/05 CIVIL STATE OF CALIFORNIA

The State of California or its officers or agents shall not be responsible for the accuracy or completeness of electronic copies of this plan sheet.

T.Y. LIN / MOFFATT & NICHOL
825 BATTERY STREET
SAN FRANCISCO, CA 94111

Caltrans now has a web site! To get to the web site, go to: http://www.dot.ca.gov

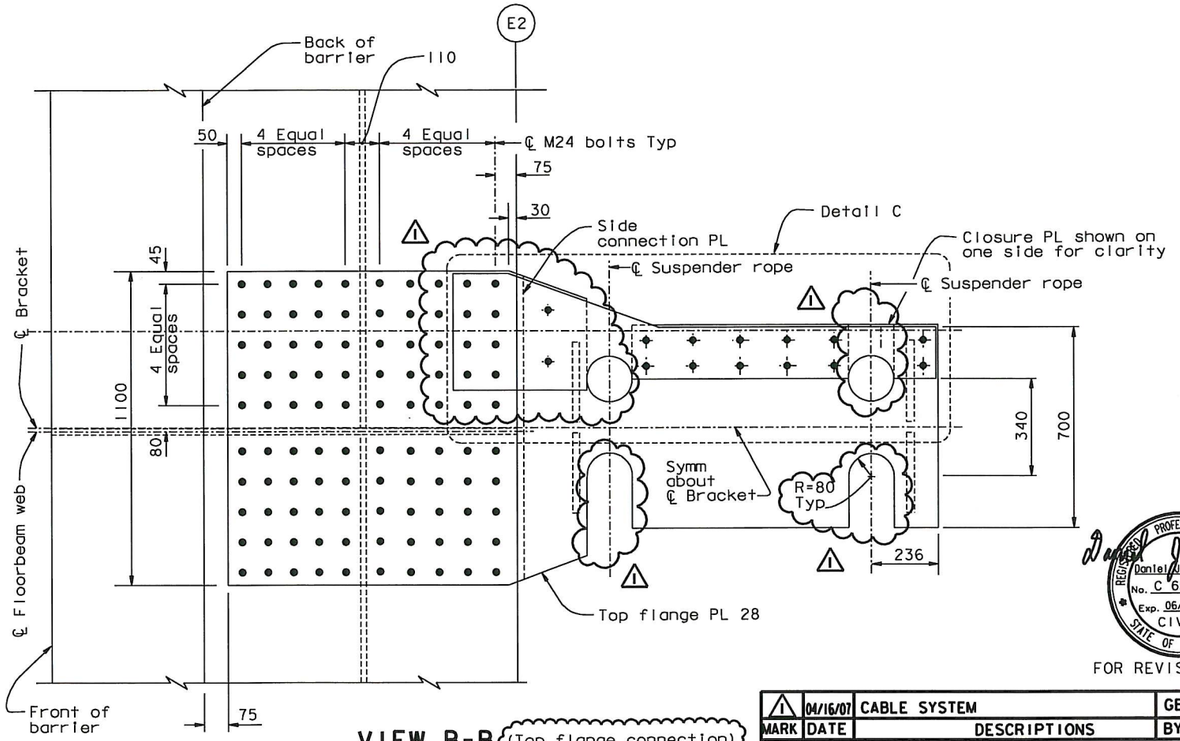

VIEW B-B (Top flange connection)
1:10

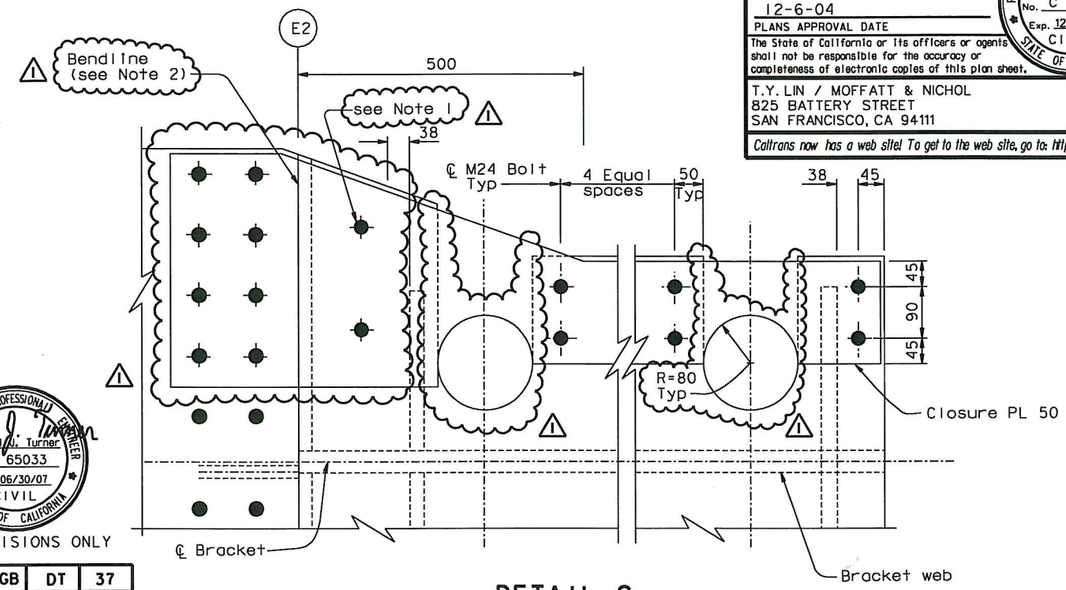

DETAIL C
1:5

Daniel J. Turner
REGISTERED PROFESSIONAL ENGINEER Daniel J. Turner No. C 65033 Exp. 06/30/07 CIVIL STATE OF CALIFORNIA

FOR REVISIONS ONLY

MARK	DATE	DESCRIPTIONS	BY	CH'D	CCO#
1	04/16/07	CABLE SYSTEM	GB	DT	37

REVISIONS

CONTRACT CHANGE ORDER NO. 37 SO
SHEET 18 OF 24

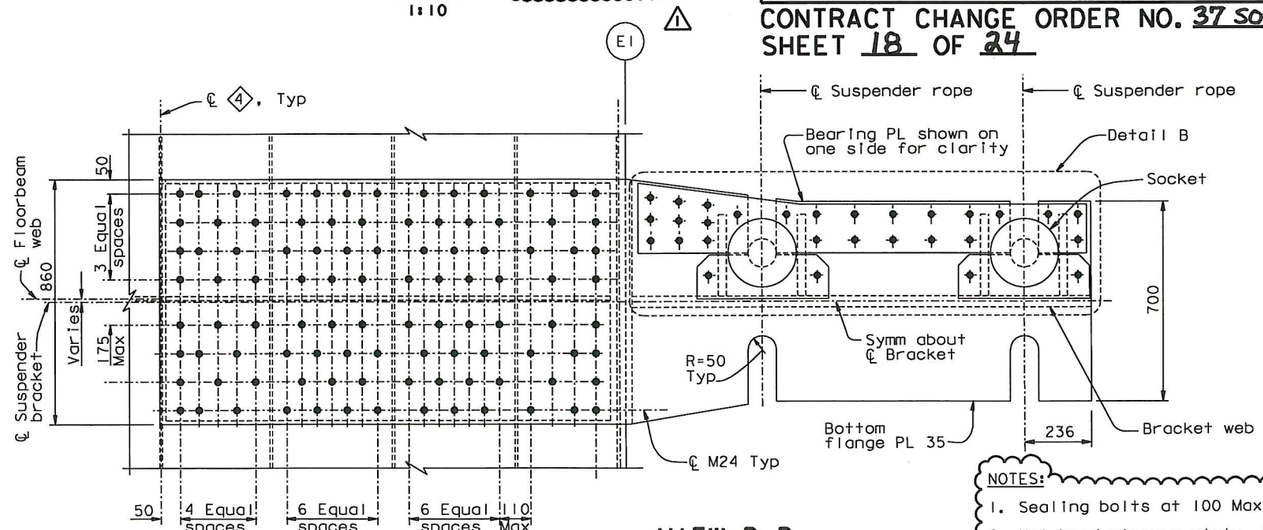

VIEW D-D
1:10

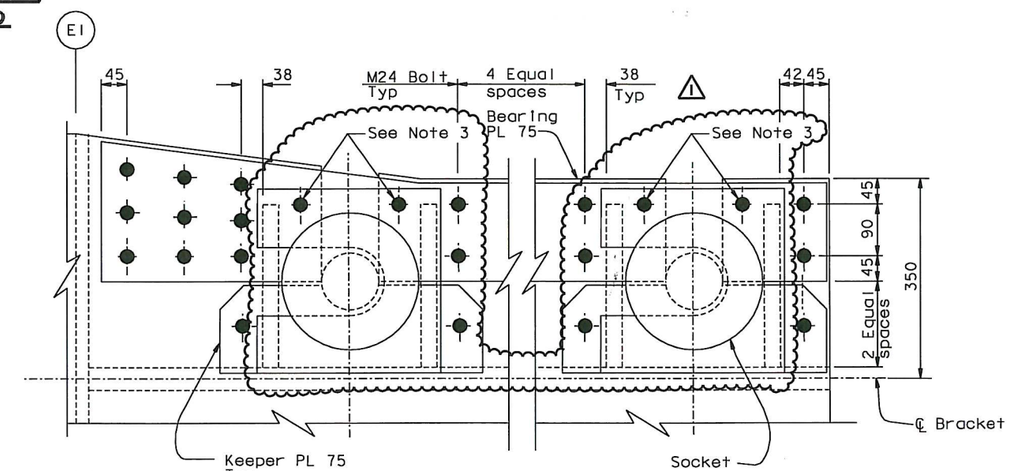

DETAIL B
1:5

NOTES:
1. Sealing bolts at 100 Max spacing as required.
2. Hot bend closure plate. Caulking shall be used under the bend line to fill gap between plates.
3. Bolts interfering with shims shall be installed in 40 mm deep counter bores in the bearing PL 75.

ALL DIMENSIONS ARE IN MILLIMETERS UNLESS OTHERWISE SHOWN

100 % PS&E

R. Valizadeh/V. Toan/Y.L./W.L./F.C.
DESIGN OVERSIGHT
Reza Valizadeh / Vong Toan / Y. Lin
SIGN OFF DATE 04/16/07

DESIGN	BY G. Baker	CHECKED T. McMeans	
DETAILS	BY S. Camo	CHECKED P. Ritchie	
QUANTITIES	BY C. Mauch	CHECKED C. Mibelli	

PREPARED FOR THE STATE OF CALIFORNIA DEPARTMENT OF TRANSPORTATION

R. Manzanarez
PROJECT ENGINEER

BRIDGE NO. 34-0006L/R
KILOMETER POST 13.2/13.9

SAN FRANCISCO OAKLAND BAY BRIDGE
EAST SPAN SEISMIC SAFETY PROJECT
SELF-ANCHORED SUSPENSION BRIDGE
(SUPERSTRUCTURE & TOWER)

SUSPENDER BRACKET DETAILS NO. 7

Rev. Date: 5-18-98

ORIGINAL SCALE IN MILLIMETERS FOR REDUCED PLANS 0 10 20 30 40 50 60 70 80 90 100

CU 04
EA 0120F1

DISREGARD PRINTS BEARING EARLIER REVISION DATES

REVISION DATES (PRELIMINARY STAGE ONLY) 05/15/99 08/02/99 05/31/01 04/08/02 07/01/02 12/19/02

SHEET 336R1 OF

FILE => I:\bb\04-012001\sas\contract plans and cco\cco\in progress\cco#37\dgn\cagsad13a.dgn

USERNAME => ptom DATE PLOTTED => 24 APR 2007 TIME PLOTTED => 11:40:12

DIST.	COUNTY	ROUTE	KILOMETER POST TOTAL PROJECT	SHEET NO.	TOTAL SHEETS
04	SF	80	13.2/13.9	762R	1204

Caltrans Metric

George Baker
REGISTERED ENGINEER - CIVIL

12-6-04
PLANS APPROVAL DATE

REGISTERED PROFESSIONAL ENGINEER George S. Baker No. C 57112 Exp. 12/31/05 CIVIL STATE OF CALIFORNIA

The State of California or its officers or agents shall not be responsible for the accuracy or completeness of electronic copies of this plan sheet.

T.Y. LIN / MOFFATT & NICHOL
825 BATTERY STREET
SAN FRANCISCO, CA 94111

To get to the web site, go to: http://www.dot.ca.gov

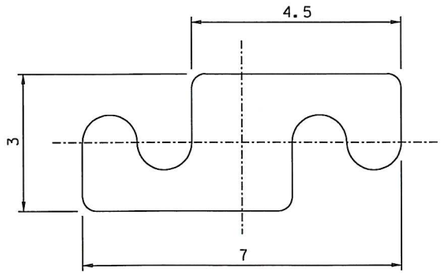

S-SHAPED WRAPPING WIRE
10:1

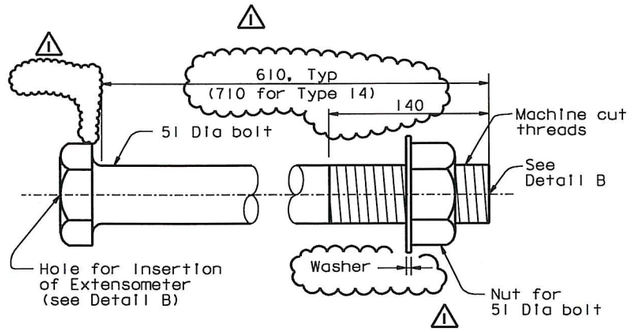

CABLE BAND BOLT
1:2.5

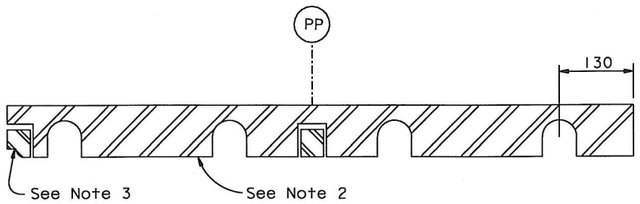

SECTION C-C
1:5

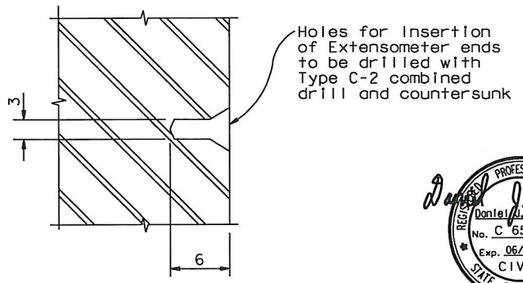

DETAIL B
NTS

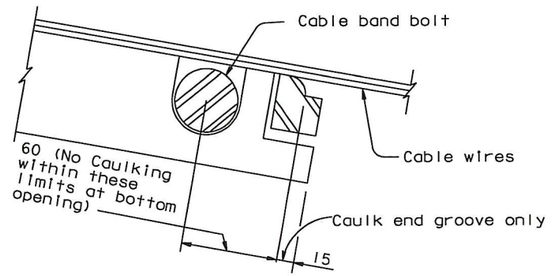

LOWER END CAULKING DETAIL
NTS

REGISTERED PROFESSIONAL ENGINEER Daniel J. Turner No. C 65033 Exp. 06/30/07 CIVIL STATE OF CALIFORNIA

FOR REVISIONS ONLY

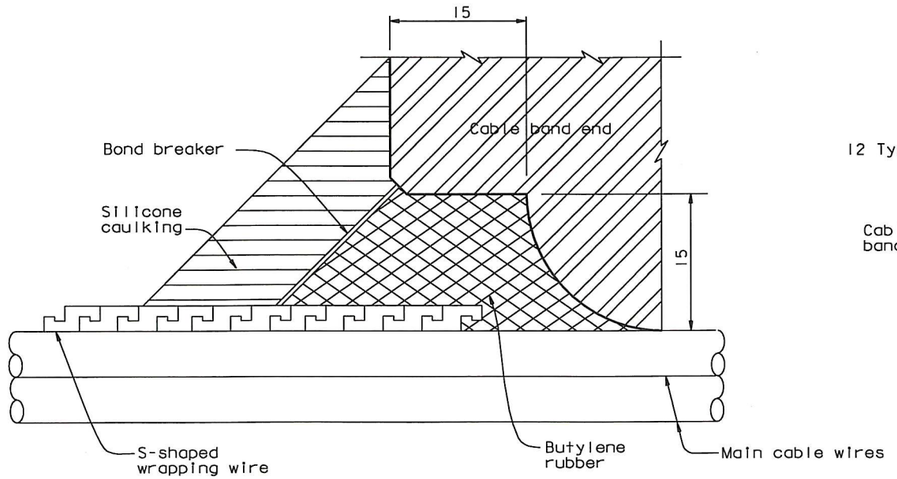

CAULKING GROOVE DETAIL
NTS

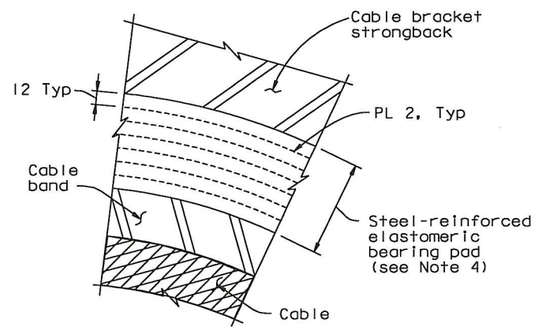

DETAIL A
1:2.5

MARK	DATE	DESCRIPTIONS	BY	CH'D	CCO#
1	04/16/07	CABLE SYSTEM	GB	DT	37

REVISIONS

CONTRACT CHANGE ORDER NO. 37 SO
SHEET 19 OF 24

NOTES:

1. For cable band bolts installation tension shall be 1.0 MN per bolt.
2. For typical details not shown, see "Cable Band Details No. 3" sheet.
3. For other caulking groove details, see "Cable Band Details No. 3" sheet.
4. Elastomeric bearing pad shall be vulcanized to both the strongback and the cable band.
5. For cable band bolt material, see "General Notes" sheets.

ALL DIMENSIONS ARE IN MILLIMETERS UNLESS OTHERWISE SHOWN

SAN FRANCISCO OAKLAND BAY BRIDGE
EAST SPAN SEISMIC SAFETY PROJECT
SELF-ANCHORED SUSPENSION BRIDGE
(SUPERSTRUCTURE & TOWER)

CABLE BAND DETAILS NO. 5

R. Valizadeh/V. Toan/Y.L./W.L./F.C.
DESIGN OVERSIGHT
SIGN OFF DATE 04/16/07

	BY	CHECKED
DESIGN	G. Baker	T. McMeans
DETAILS	S. Camo	P. Ritchie
QUANTITIES	C. Mauch	C. Mibelli

PREPARED FOR THE STATE OF CALIFORNIA DEPARTMENT OF TRANSPORTATION

R. Manzanarez
PROJECT ENGINEER

BRIDGE NO. 34-0006L/R
KILOMETER POST 13.2/13.9

Rev. Date: 5-18-98

ORIGINAL SCALE IN MILLIMETERS FOR REDUCED PLANS 0 10 20 30 40 50 60 70 80 90 100

CU 04
EA 0120F1

DISREGARD PRINTS BEARING EARLIER REVISION DATES

REVISION DATES (PRELIMINARY STAGE ONLY) 05/15/99 08/02/99 05/31/01 04/08/02 07/01/02 12/19/02

SHEET 345R1 OF

FILE => I:\bb\04-012001\sas\contract plans and cco\cco\in progress\cco#37\dgn\cagcbd05.dgn

USERNAME => ptom DATE PLOTTED => 24 APR 2007 TIME PLOTTED => 11:42:00

100 % PS&E

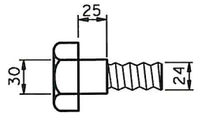

SHOULDER BOLT DETAIL

1:2.5

(At panel point 8 and 104 only)

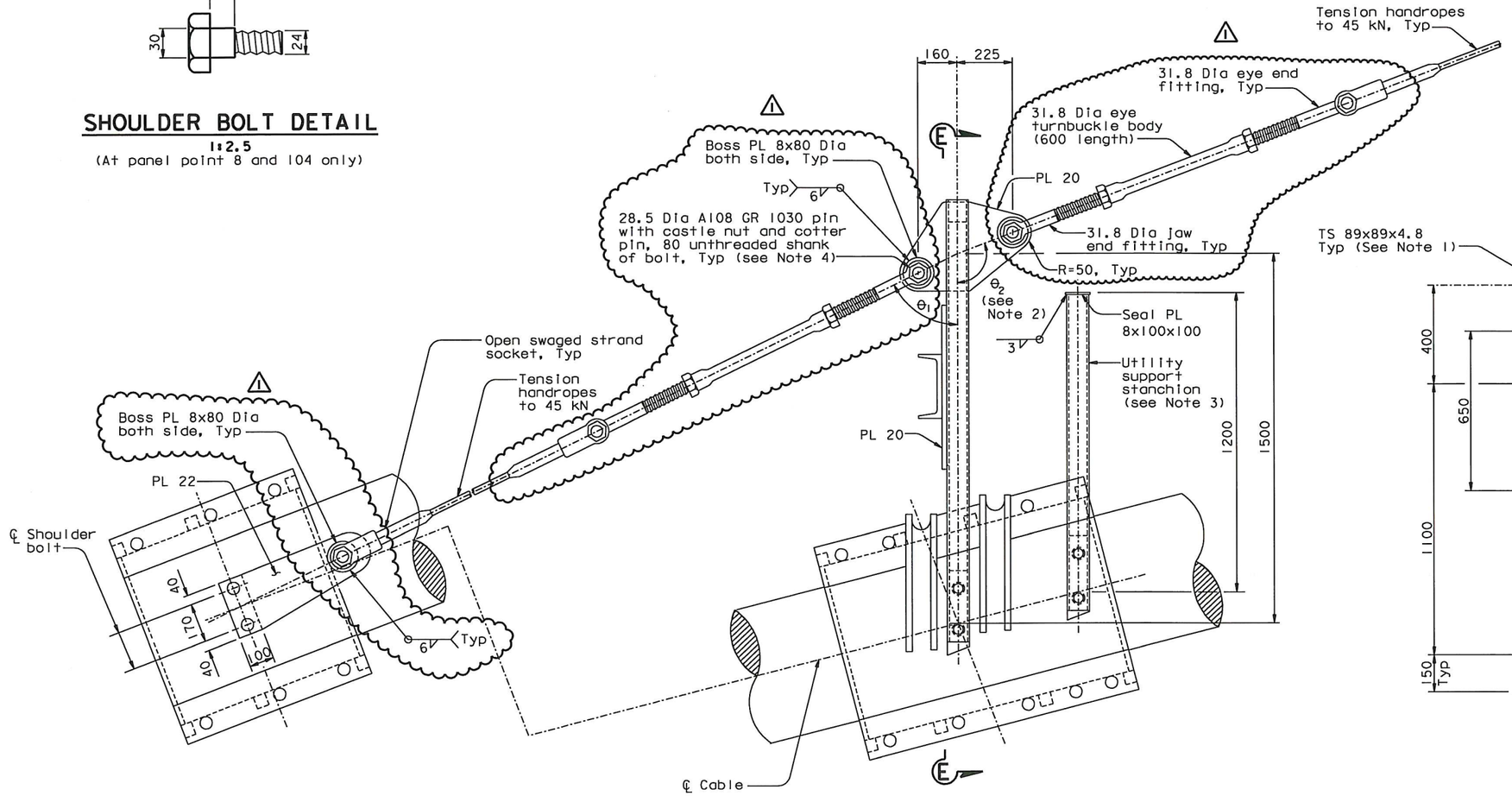

HANDROPE ANCHORAGE AT PANEL POINT 8

(Details at panel point 104 are similar)

ANCHOR STANCHION AT PANEL POINT 10

(Details at panel points 40, 44 & 102 are similar)

DETAIL A

1:10

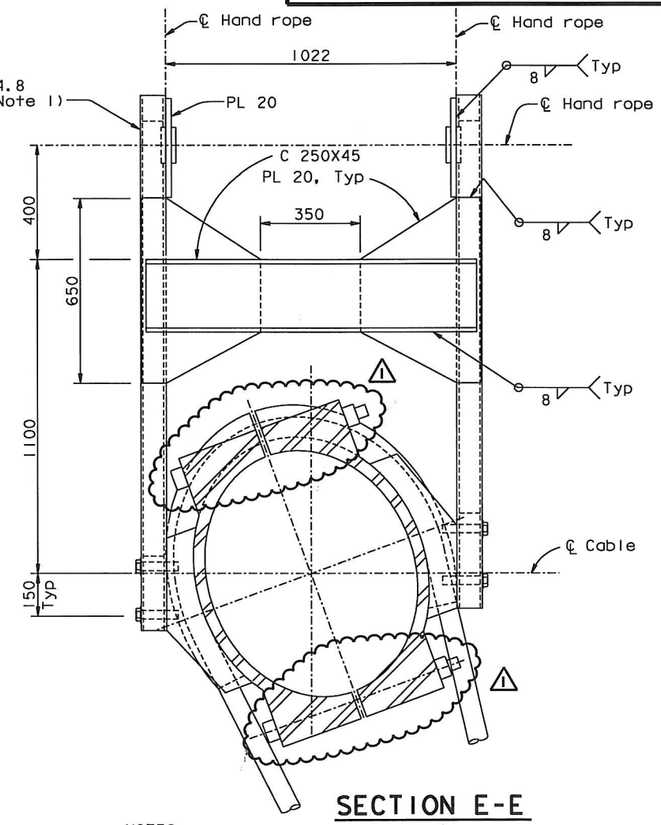

SECTION E-E

1:10

NOTES:

1. For details not shown, see "Cable Band Details" and "Cable Handrope Details No.1" sheets.
2. For handrope bracket angles, see "Cable Handrope Details No.3" sheet.
3. For details not shown, see "Cable Handrope Details No.1" sheet. For utility support stanchion locations, see "Road Plans" sheets.
4. The Contractor may revise the pin details as approved by the Engineer. The pin shall develop the breaking load of the handrope.

MARK	DATE	DESCRIPTIONS	BY	CH'D	CCO#
		REVISIONS			
1	04/16/07	CABLE SYSTEM	GB	MN	37

CONTRACT CHANGE ORDER NO. 37 SO

SHEET 20 OF 24

ALL DIMENSIONS ARE IN MILLIMETERS UNLESS OTHERWISE SHOWN

DIST.	COUNTY	ROUTE	KILOMETER POST TOTAL PROJECT	SHEET NO.	TOTAL SHEETS
04	SF	80	13.2/13.9	813R1	1204

REGISTERED ENGINEER - CIVIL

12-6-04

PLANS APPROVAL DATE

PROFESSIONAL ENGINEER — Marwan N. Nader — No. C 054426 — Exp. 12/31/07 — CIVIL — STATE OF CALIFORNIA

The State of California or its officers or agents shall not be responsible for the accuracy or completeness of electronic copies of this plan sheet.

T.Y. LIN / MOFFATT & NICHOL
825 BATTERY STREET
SAN FRANCISCO, CA 94111

Caltrans now has a web site! To get to the web site, go to: http://www.dot.ca.gov

DESIGN	BY M. Nader	CHECKED	T. McMeans
DETAILS	BY G. Baker	CHECKED	T. McMeans
QUANTITIES	BY G. Baker	CHECKED	C. Mibelli

R. Valizadeh/V. Toan/Y.L./W.L./F.C.
DESIGN OVERSIGHT
SIGN OFF DATE 04/16/07

PREPARED FOR THE STATE OF CALIFORNIA
DEPARTMENT OF TRANSPORTATION

R. Manzanarez
PROJECT ENGINEER

BRIDGE NO. 34-0006L/R
KILOMETER POST 13.2/13.9

CU 04
EA 0120F1

SAN FRANCISCO OAKLAND BAY BRIDGE
EAST SPAN SEISMIC SAFETY PROJECT
SELF-ANCHORED SUSPENSION BRIDGE
(SUPERSTRUCTURE & TOWER)

CABLE HANDROPE DETAILS NO. 2

Rev. Date: 5-18-98

ORIGINAL SCALE IN MILLIMETERS FOR REDUCED PLANS 0 10 20 30 40 50 60 70 80 90 100

DISREGARD PRINTS BEARING EARLIER REVISION DATES →

REVISION DATES (PRELIMINARY STAGE ONLY): 05/15/98 08/02/99 05/31/01 04/08/02 07/01/02 12/15/02

SHEET 396R1 OF

FILE => I:\bb\04-0120I\sas\contract plans and cco\cco\In progress\cco#37\dgn\cagshr08.dgn

100% PS&E

DATE PLOTTED => 24 APR 2007 TIME PLOTTED => 11:43:20

USERNAME => ptom

Panel Point	Handrope Bracket Angles		
	θ_1	θ_2	θ_3
10	60°	116°	NA
40	54°	116°	35°
44	60°	112°	30°
102	78°	96°	NA

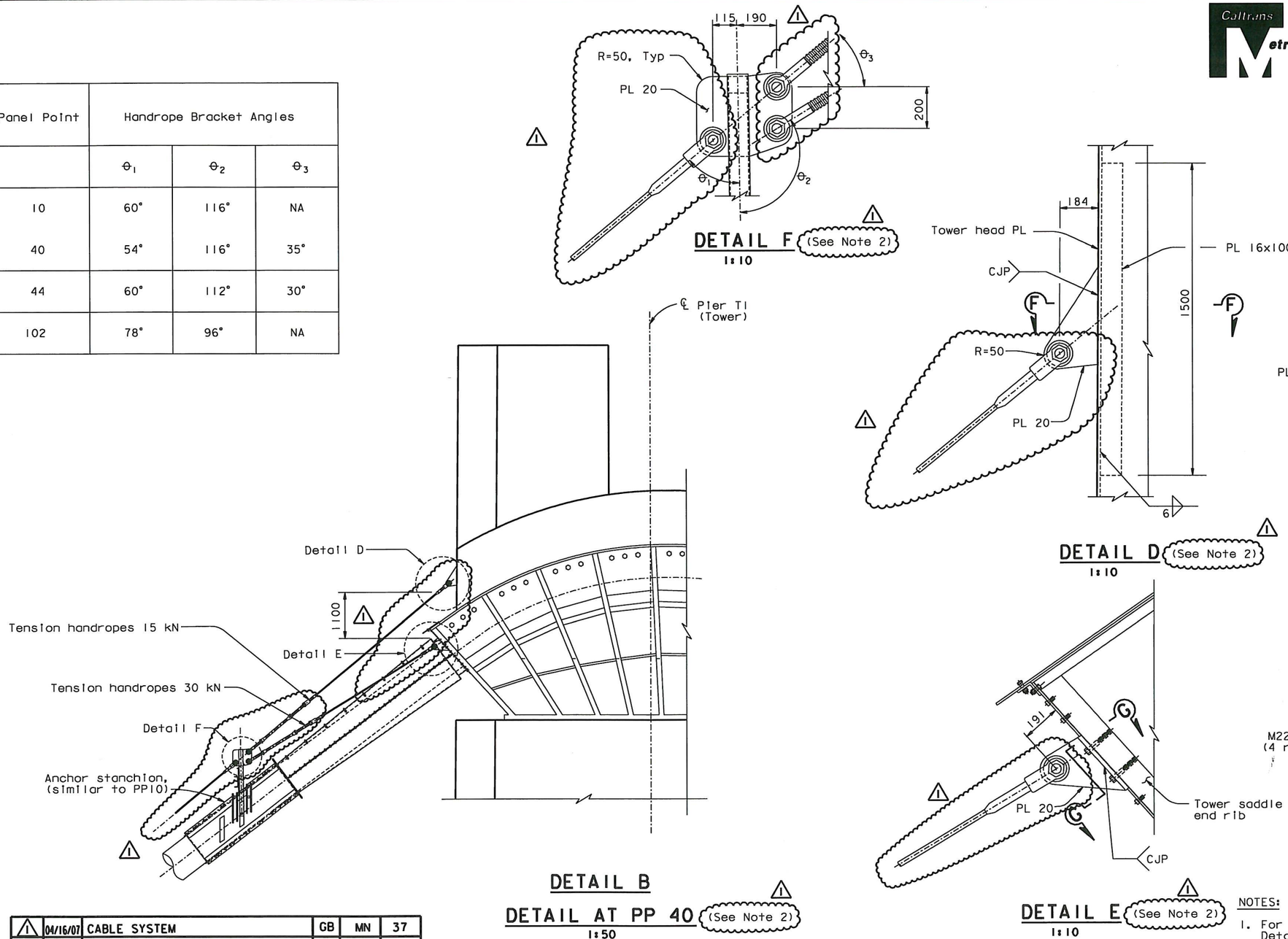

DETAIL F (See Note 2)
1:10

DETAIL B

DETAIL AT PP 40 (See Note 2)
1:50
(Details at PP 44 are similar)

DETAIL D (See Note 2)
1:10

SECTION F-F
1:10

DETAIL E (See Note 2)
1:10

SECTION G-G
1:10

NOTES:

1. For anchor stanchion, see "Cable Handrope Details No. 2" sheet.
2. For details not shown see "Cable Handrope Details No. 2" sheet.

MARK	DATE	DESCRIPTIONS	BY	CH'D	CCO#
1	04/16/07	CABLE SYSTEM	GB	MN	37

REVISIONS

CONTRACT CHANGE ORDER NO. 37 SO
SHEET 21 OF 24

ALL DIMENSIONS ARE IN MILLIMETERS UNLESS OTHERWISE SHOWN

DIST.	COUNTY	ROUTE	KILOMETER POST TOTAL PROJECT	SHEET NO.	TOTAL SHEETS
04	SF	80	13.2/13.9	814R1	1204

Caltrans Metric

REGISTERED ENGINEER - CIVIL
12-6-04
PLANS APPROVAL DATE

REGISTERED PROFESSIONAL ENGINEER Marwan N. Nader No. C 054426 Exp. 12/31/07 CIVIL STATE OF CALIFORNIA

The State of California or its officers or agents shall not be responsible for the accuracy or completeness of electronic copies of this plan sheet.

T.Y. LIN / MOFFATT & NICHOL
825 BATTERY STREET
SAN FRANCISCO, CA 94111

Caltrans now has a web site! To get to the web site, go to: http://www.dot.ca.gov

R. Valizadeh/V. Toan/Y.L./W.L./F.C.
DESIGN OVERSIGHT
Roger Valizadeh / Vong P. Toan / Y. Lu
SIGN OFF DATE 04/16/07

DESIGN	BY M. Nader	CHECKED T. McMeans	
DETAILS	BY G. Baker	CHECKED T. McMeans	
QUANTITIES	BY G. Baker	CHECKED C. Mibelli	

PREPARED FOR THE STATE OF CALIFORNIA DEPARTMENT OF TRANSPORTATION

R. Manzanarez
PROJECT ENGINEER

BRIDGE NO. 34-0006L/R
KILOMETER POST 13.2/13.9

SAN FRANCISCO OAKLAND BAY BRIDGE
EAST SPAN SEISMIC SAFETY PROJECT
SELF-ANCHORED SUSPENSION BRIDGE
(SUPERSTRUCTURE & TOWER)

CABLE HANDROPE DETAILS NO. 3

Rev. Date: 5-18-98

ORIGINAL SCALE IN MILLIMETERS FOR REDUCED PLANS 0 10 20 30 40 50 60 70 80 90 100

CU 04
EA 0120F1

DISREGARD PRINTS BEARING EARLIER REVISION DATES

REVISION DATES (PRELIMINARY STAGE ONLY) 08/02/99 05/31/01 04/08/02 07/01/02 12/18/02 09/06/04

SHEET 397R1 OF

FILE => I:\bb\04-012001\sas\contract plans and cco\cco\in progress\cco#37\dgn\cagshr09.dgn

100 % PS&E

DATE PLOTTED => 28 AUG 2007 TIME PLOTTED => 14:48:16

USERNAME => ptom

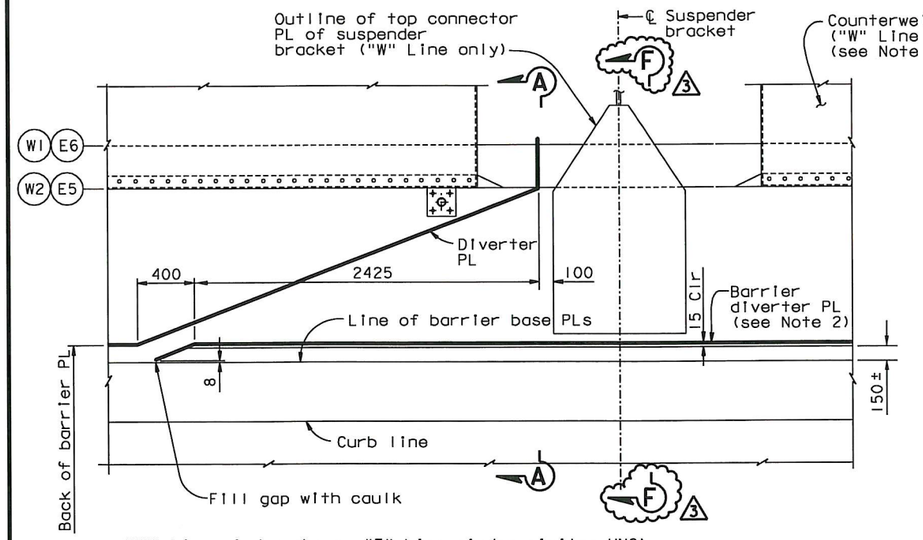

("W" Line girder shown. "E" Line girder similar UNO)

TYPICAL DRAINAGE PLAN TYPE 1 (See Notes 3 & 5)

1:20

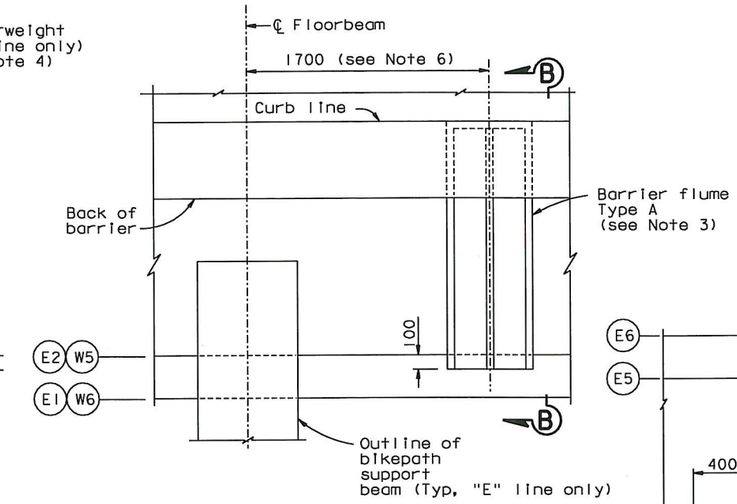

("E" Line girder shown. "W" Line girder similar UNO)

TYPICAL DRAINAGE PLAN TYPE 2

1:20 (See Note 3)

NOTES:

1. For sections A-A, A'-A', B-B, C-C, see "Deck Drainage Details No.2" sheet.
2. Barrier diverter plate shall be continuous along barriers near working lines W2 and E5, unless otherwise shown.
3. For barrier flume details and locations of drainage types 1, 2 and 3, see "Deck Drainage Details No.3" sheet.
4. For Counterweight details, see "Typical Girder Details" sheets.
5. Diverter plates may be shifted subject to review and approval by the Engineer.
6. Barrier flumes may be shifted to avoid interferences with deck level utilities and fixtures, subject to review and approval of the Engineer.

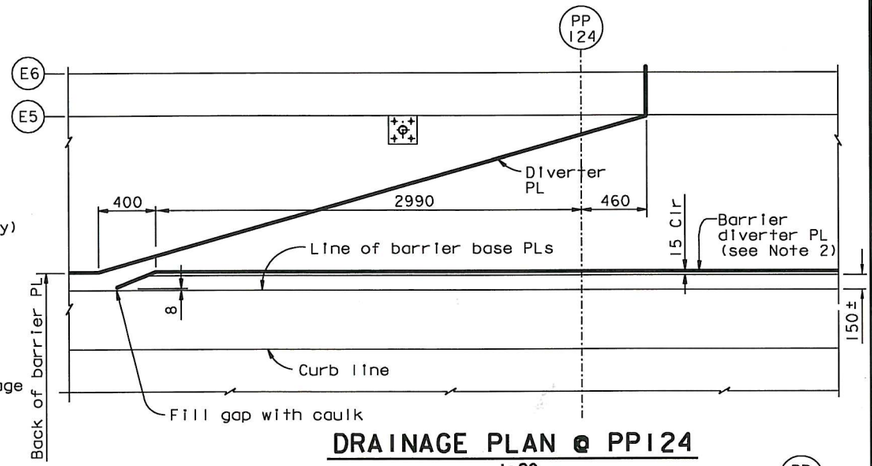

DRAINAGE PLAN @ PP124

1:20

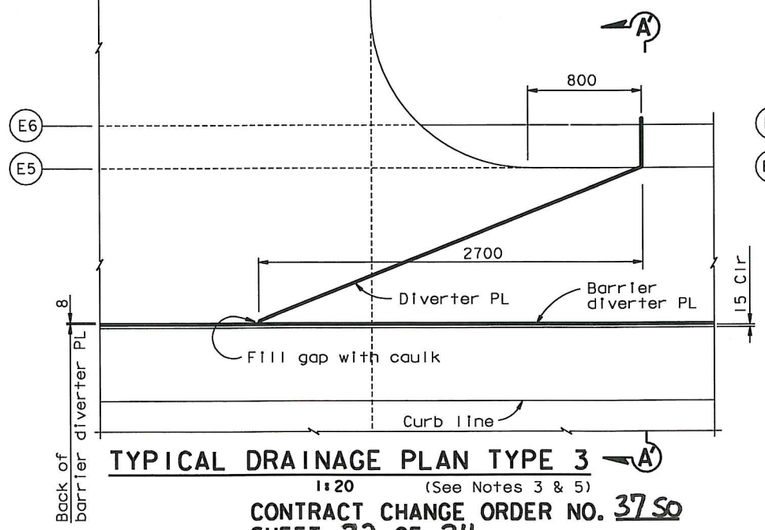

TYPICAL DRAINAGE PLAN TYPE 3

1:20 (See Notes 3 & 5)

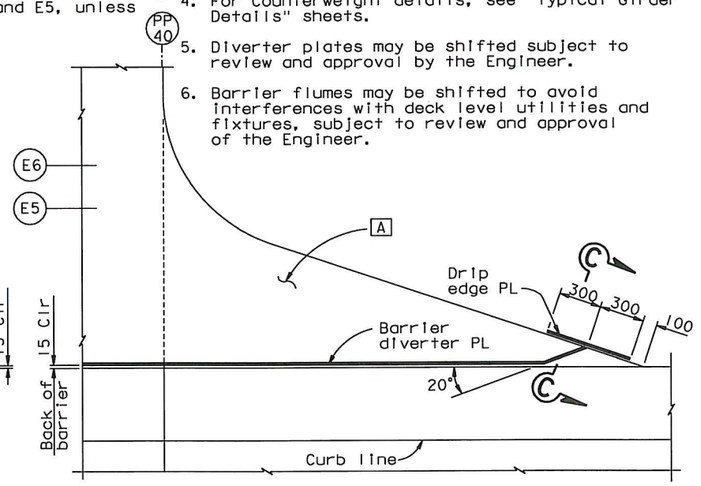

AT "E" LINE PP40 ONLY

DRAINAGE PLAN TYPE 4

1:20

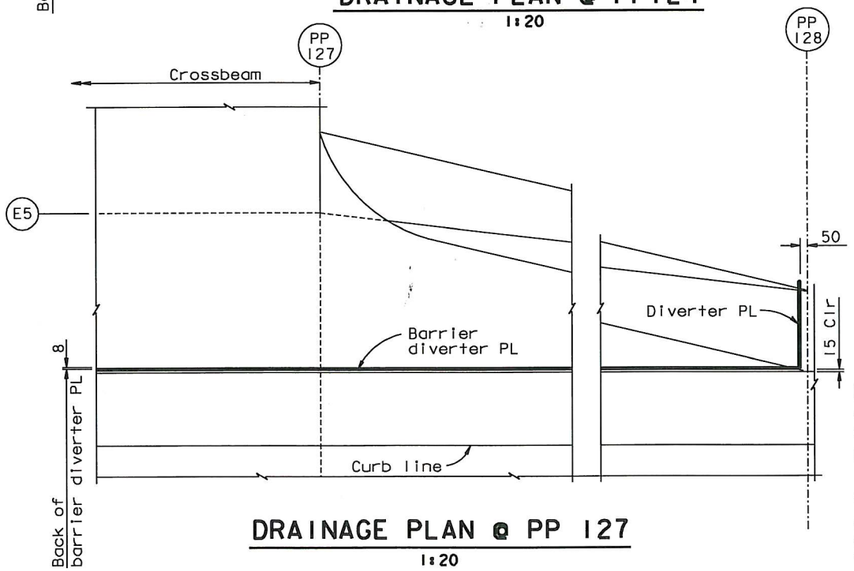

DRAINAGE PLAN @ PP 127

1:20

CONTRACT CHANGE ORDER NO. 37 SO
SHEET 22 OF 24

REQUESTS FOR INFORMATION NOT ADDRESSED IN THIS CCO REMAIN IN FORCE

MARK	DATE	DESCRIPTIONS	BY	CH'D	CCO#
3	10/30/09	MOD. SUSP. BRACKETS & CABLE SYSTEM	CC	DT	37
2	04/18/08	BARRIER MODIFICATIONS	AS	DT	44
1	08/24/07	BARRIER MODIFICATIONS	GB	DT	44

REVISIONS

DESIGN OVERSIGHT: R. Vallizadeh/V. Toan/Y.L./W.L./F.C.
SIGN OFF DATE 10/30/09

DESIGN BY G. Baker CHECKED T. Ho
DETAILS BY D. Turner CHECKED T. Ho
QUANTITIES BY G. Baker CHECKED D. Harrison

PREPARED FOR THE STATE OF CALIFORNIA DEPARTMENT OF TRANSPORTATION

R. Manzanarez, PROJECT ENGINEER

CU 04
EA 0120F1

Rev. Date: 5-18-98

ORIGINAL SCALE IN MILLIMETERS FOR REDUCED PLANS 0 10 20 30 40 50 60 70 80 90 100

ALL DIMENSIONS ARE IN MILLIMETERS UNLESS OTHERWISE SHOWN

DISREGARD PRINTS BEARING EARLIER REVISION DATES

REVISION DATES (PRELIMINARY STAGE ONLY): 05/25/99 08/25/99 05/24/01 04/09/02 07/01/02 12/19/02

DIST.	COUNTY	ROUTE	KILOMETER POST TOTAL PROJECT	SHEET NO.	TOTAL SHEETS
04	SF	80	13.2/13.9	876R3	1204

George Baker
REGISTERED ENGINEER - CIVIL
12-6-04
PLANS APPROVAL DATE

REGISTERED PROFESSIONAL ENGINEER George S. Baker No. C57112 Exp. 12/31/05 CIVIL STATE OF CALIFORNIA

Daniel J. Turner
REGISTERED PROFESSIONAL ENGINEER Daniel J. Turner No. C 65033 Exp. 06/30/11 CIVIL STATE OF CALIFORNIA
FOR REVISIONS ONLY

The State of California or its officers or agents shall not be responsible for the accuracy or completeness of electronic copies of this plan sheet.

T.Y. LIN / MOFFATT & NICHOL
825 BATTERY STREET
SAN FRANCISCO, CA 94111

Caltrans now has a web site! To get to the web site, go to: http://www.dot.ca.gov

SAN FRANCISCO OAKLAND BAY BRIDGE
EAST SPAN SEISMIC SAFETY PROJECT
SELF-ANCHORED SUSPENSION BRIDGE (SUPERSTRUCTURE & TOWER)

BRIDGE NO. 34-0006L/R
KILOMETER POST 13.2/13.9

DECK DRAINAGE DETAILS NO. 1

SHEET 459R3 OF

100 % PS&E

USERNAME => crivera DATE PLOTTED => 29 OCT 2009 TIME PLOTTED => 16:42:50

FILE => I:\bb\04-0120I\sas\contract plans and cco\cco\cco#37\2-revision 10-30-09\dgn\akdkd01.dgn

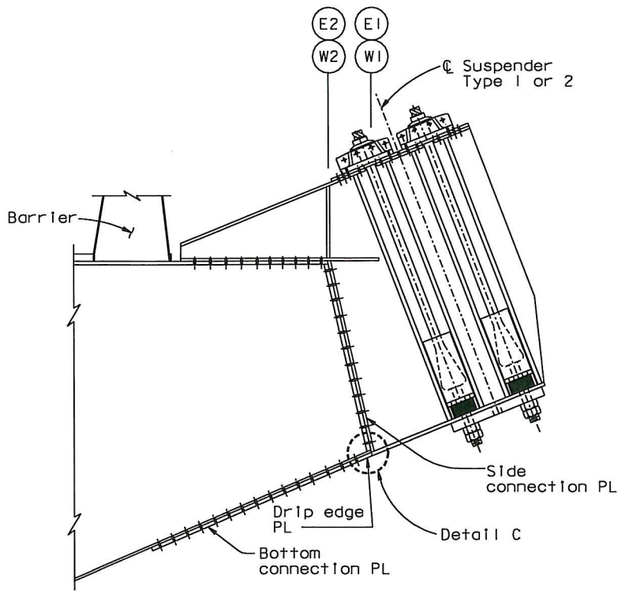

SECTION F-F
1:20

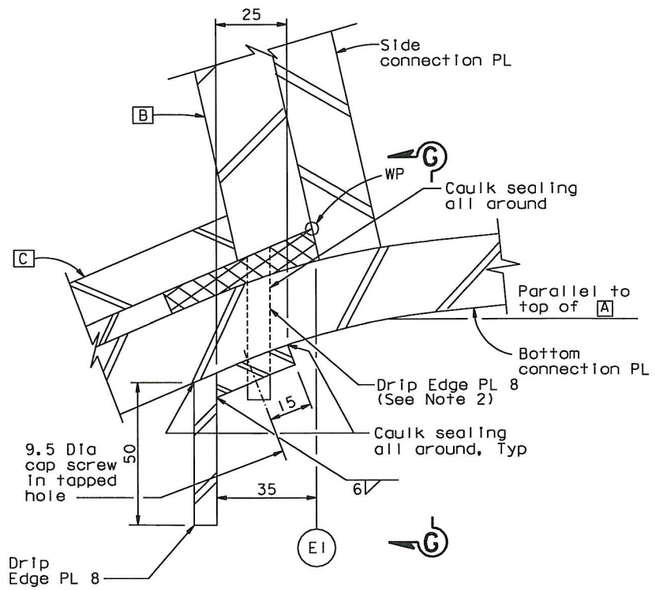

DETAIL C
1:1

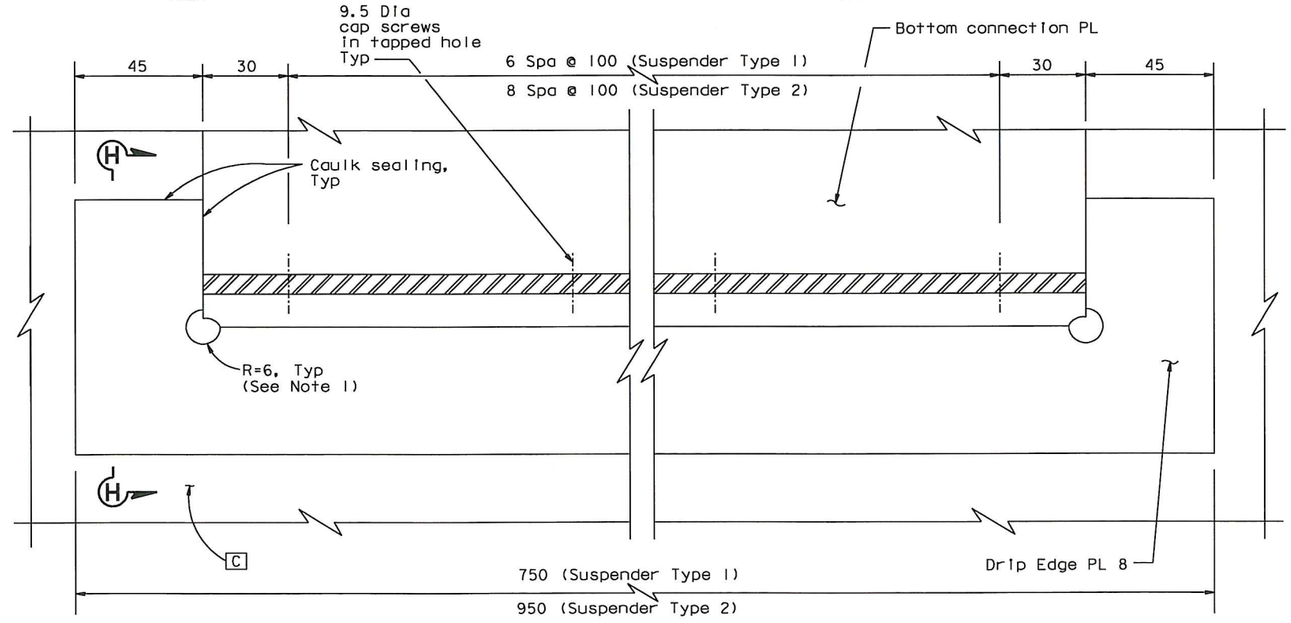

VIEW G-G
1:1

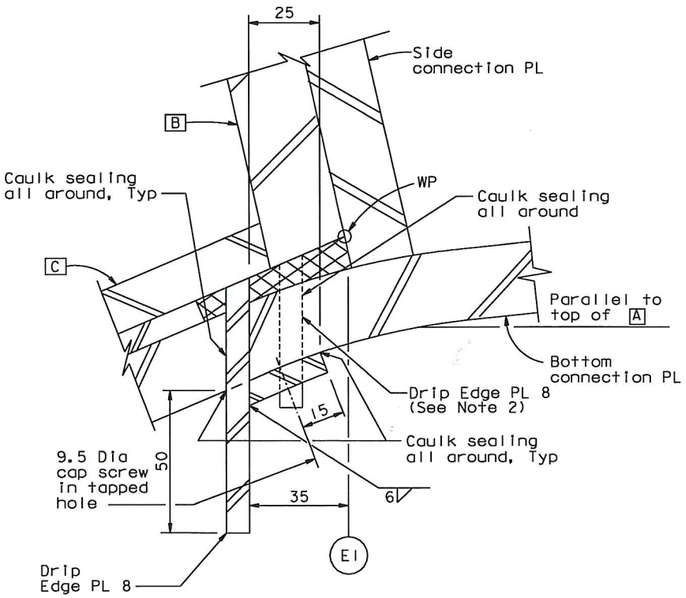

SECTION H-H
1:1

NOTES:

1. Round cope is provided for Contractor's fabrication and is optional. The cope shall be filled with caulk after drip edge PL installation.
2. Drip edge PL 8 welded to Girder Face C terminates at suspender bracket. Caulk sealing shall be applied all around the termination.

CONTRACT CHANGE ORDER NO. 37S0
SHEET 23 OF 24

REQUESTS FOR INFORMATION NOT ADDRESSED IN THIS CCO REMAIN IN FORCE

ALL DIMENSIONS ARE IN MILLIMETERS UNLESS OTHERWISE SHOWN

DIST.	COUNTY	ROUTE	KILOMETER POST TOTAL PROJECT	SHEET NO.	TOTAL SHEETS
04	SF	80	13.2/13.9	876SI	1204

REGISTERED ENGINEER - CIVIL
10-30-09
PLANS APPROVAL DATE
The State of California or its officers or agents shall not be responsible for the accuracy or completeness of electronic copies of this plan sheet.
James P. Duxbury No. C 64677 Exp. 06/30/11 CIVIL — REGISTERED PROFESSIONAL ENGINEER — STATE OF CALIFORNIA

T.Y. LIN / MOFFATT & NICHOL
825 BATTERY STREET
SAN FRANCISCO, CA 94111

Caltrans now has a web site! To get to the web site, go to: http://www.dot.ca.gov

MARK	DATE	REVISIONS	BY	CH'D	CCO#
4	10/30/09	MOD. SUSP. BRACKETS & CABLE SYSTEM	CC	JD	37

	BY	CHECKED
DESIGN	C. Choi	J. Duxbury
DETAILS	C. Choi	J. Duxbury
QUANTITIES	C. Choi	J. Duxbury

PREPARED FOR THE STATE OF CALIFORNIA DEPARTMENT OF TRANSPORTATION

R. Manzanarez
PROJECT ENGINEER

BRIDGE NO. 34-0006L/R
KILOMETER POST 13.2/13.9

SAN FRANCISCO OAKLAND BAY BRIDGE
EAST SPAN SEISMIC SAFETY PROJECT
SELF-ANCHORED SUSPENSION BRIDGE (SUPERSTRUCTURE & TOWER)
DECK DRAINAGE DETAILS NO. 1A

R. Valizadeh/V. Toan/Y.L./W.L./F.C.
DESIGN OVERSIGHT
Ron Valizadeh / Vong Toan / Y. Liu
SIGN OFF DATE 10/30/09

Rev. Date: 5-18-98

ORIGINAL SCALE IN MILLIMETERS FOR REDUCED PLANS 0 10 20 30 40 50 60 70 80 90 100

CU 04
EA 0120F1

DISREGARD PRINTS BEARING EARLIER REVISION DATES

REVISION DATES (PRELIMINARY STAGE ONLY): 10/30/09

SHEET 459SI OF

FILE => I:\bb\04-012001\sas\contract plans and cco\cco\cco#37\2-revision 10-30-09\dgn\akdkd01a.dgn

100% PS&E
DATE PLOTTED => 29 OCT 2009 TIME PLOTTED => 16:44:05
USERNAME => arivera

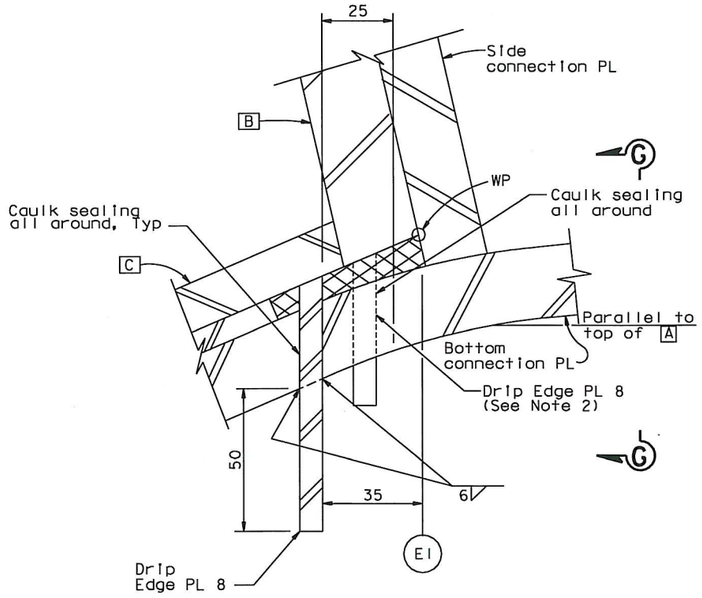

ALTERNATIVE DETAIL C (WELDED OPTION)

1:1

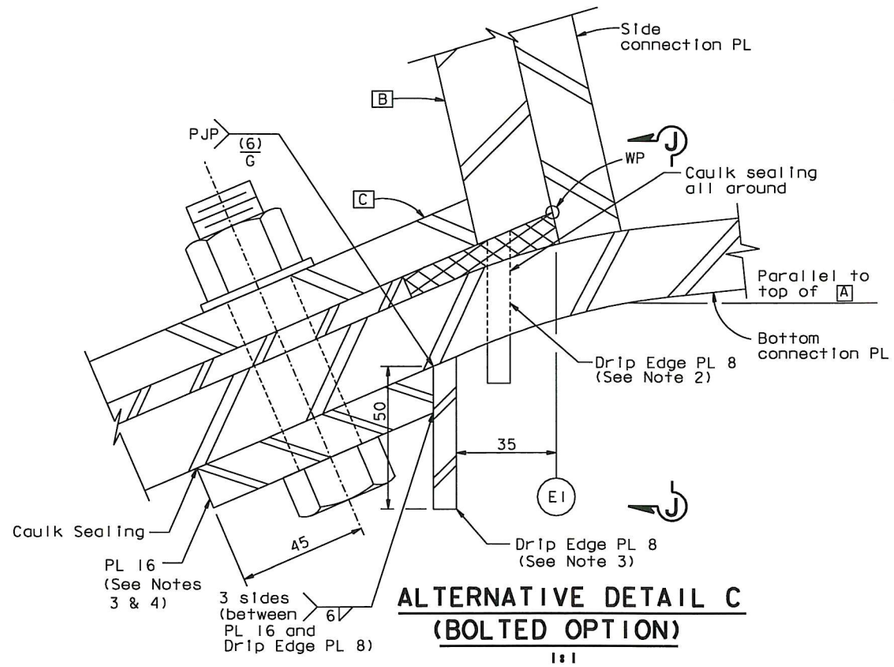

ALTERNATIVE DETAIL C (BOLTED OPTION)

1:1

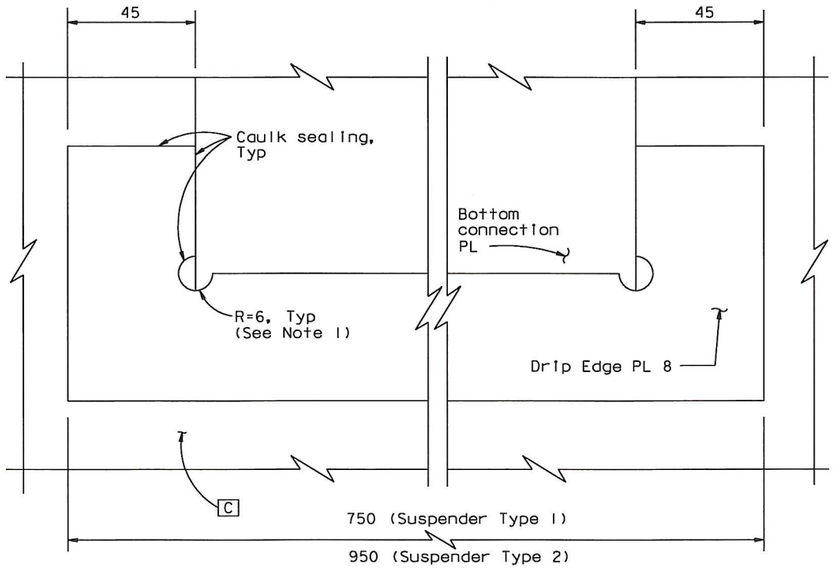

VIEW G-G

1:1

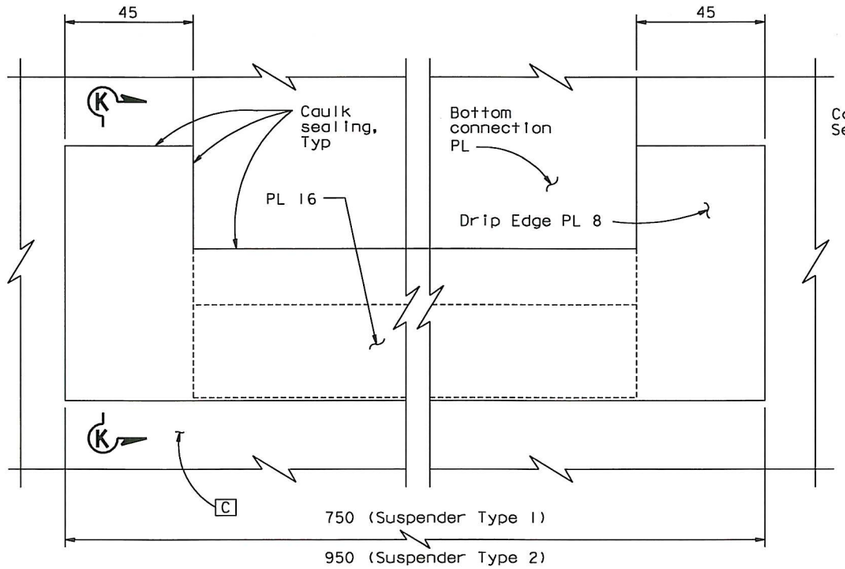

VIEW J-J

1:1

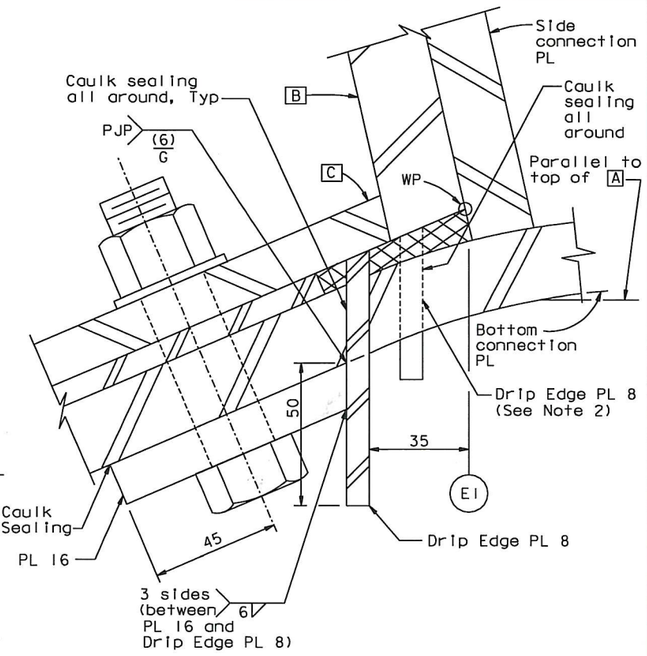

SECTION K-K

1:1

NOTES:

1. At the Contractor's option, "Alternative Detail C" may be used in lieu of "Detail C" on "Deck Drainage Details No. 1A" sheet.
2. Drip edge PL 8 welded to Girder Face C terminates at suspender bracket. Caulk sealing shall be applied all around the termination.
3. PL 16 and drip edge PL 8 shall be pre-assembled prior to field installation.
4. At the Contractor's option, short-slotted holes or standard oversized holes are acceptable in Drip Edge PL 8, provided hardened washers are used.

CONTRACT CHANGE ORDER NO. 37 SO
SHEET 34 OF 34

REQUESTS FOR INFORMATION NOT ADDRESSED IN THIS CCO REMAIN IN FORCE

ALL DIMENSIONS ARE IN MILLIMETERS UNLESS OTHERWISE SHOWN

Caltrans Metric

DIST.	COUNTY	ROUTE	KILOMETER POST TOTAL PROJECT	SHEET NO.	TOTAL SHEETS
04	SF	80	13.2/13.9	876S2	1204

REGISTERED ENGINEER - CIVIL

James P. Duxbury No. C 64677 Exp. 06/30/11 CIVIL — REGISTERED PROFESSIONAL ENGINEER — STATE OF CALIFORNIA

04-02-10
PLANS APPROVAL DATE

The State of California or its officers or agents shall not be responsible for the accuracy or completeness of electronic copies of this plan sheet.

T.Y. LIN / MOFFATT & NICHOL
825 BATTERY STREET
SAN FRANCISCO, CA 94111

Caltrans now has a web site! To get to the web site, go to: http://www.dot.ca.gov

MARK	DATE	DESCRIPTIONS	BY	CH'D	CCO#
		REVISIONS			
6	04/02/10	MOD. SUSP. BRACKETS & CABLE SYSYTEM	CC	JD	37

	BY	CHECKED
DESIGN	C. Choi	J. Duxbury
DETAILS	C. Choi	J. Duxbury
QUANTITIES	C. Choi	J. Duxbury

PREPARED FOR THE STATE OF CALIFORNIA DEPARTMENT OF TRANSPORTATION

R. Manzanarez
PROJECT ENGINEER

BRIDGE NO. 34-0006L/R
KILOMETER POST 13.2/13.9

R. Vallzadeh/V. Toan/Y.L./W.L./F.C.
DESIGN OVERSIGHT
SIGN OFF DATE 04/02/10

Rev. Date: 5-18-98

ORIGINAL SCALE IN MILLIMETERS FOR REDUCED PLANS 0 10 20 30 40 50 60 70 80 90 100

CU 04
EA 0120F1

DISREGARD PRINTS BEARING EARLIER REVISION DATES → REVISION DATES (PRELIMINARY STAGE ONLY) 04/02/10

SHEET 459S2 OF

SAN FRANCISCO OAKLAND BAY BRIDGE
EAST SPAN SEISMIC SAFETY PROJECT
SELF-ANCHORED SUSPENSION BRIDGE
(SUPERSTRUCTURE & TOWER)

DECK DRAINAGE DETAILS NO. 1B

FILE => I:\bb\04-012001\sas\contract plans and cco\cco\cco#37\4-update 04-02-10\dgn\akdkd01b.dgn

100% PS&E
USERNAME => arivera DATE PLOTTED => 31 MAR 2010 TIME PLOTTED => 14:16:35