DIST.	COUNTY	ROUTE	KILOMETER POST TOTAL PROJECT	SHEET NO.	TOTAL SHEETS
04	SF	80	13.2/13.9	912R3	1204

Caltrans Metric

REGISTERED ENGINEER - CIVIL

12-6-04
PLANS APPROVAL DATE

REGISTERED PROFESSIONAL ENGINEER Tien Hung Ho No. C 43990 Exp. 06/30/11 CIVIL STATE OF CALIFORNIA

The State of California or its officers or agents shall not be responsible for the accuracy or completeness of electronic copies of this plan sheet.

T.Y. LIN / MOFFATT & NICHOL
825 BATTERY STREET
SAN FRANCISCO, CA 94111

Caltrans now has a web site! To get to the web site, go to: http://www.dot.ca.gov

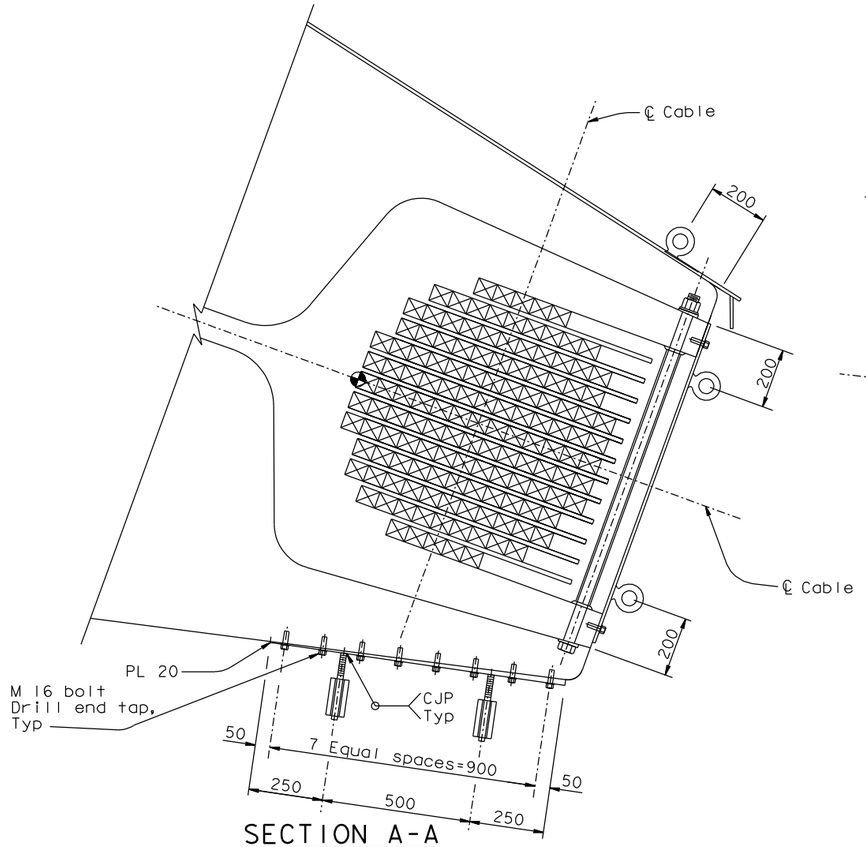

SECTION A-A
1:10

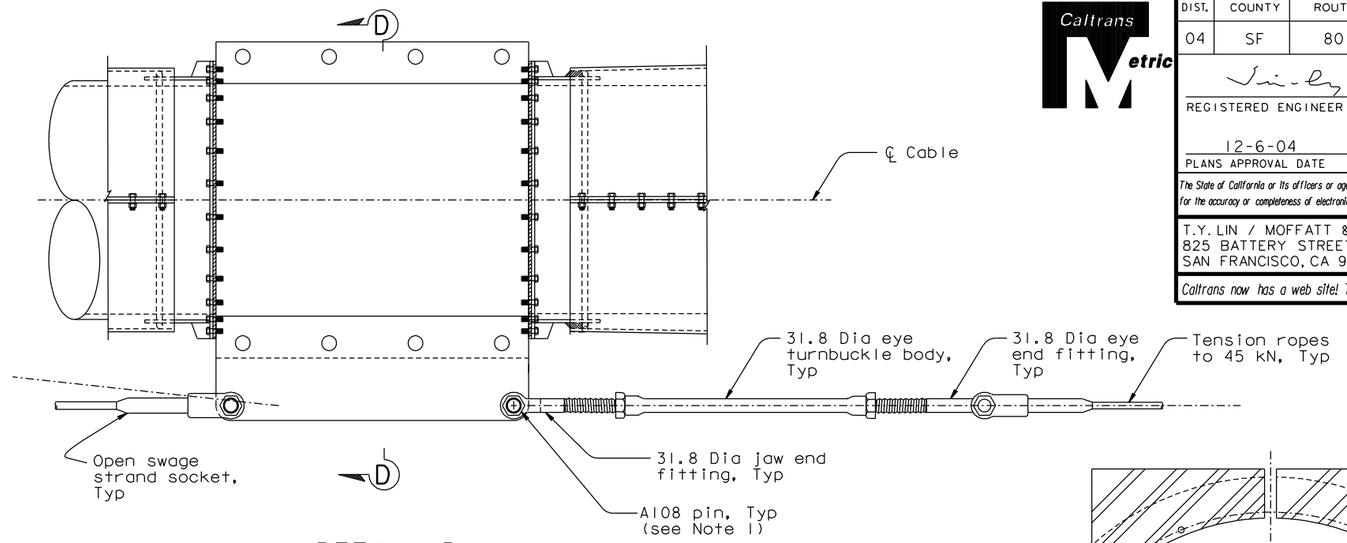

DETAIL D (Detail C similar)
1:10

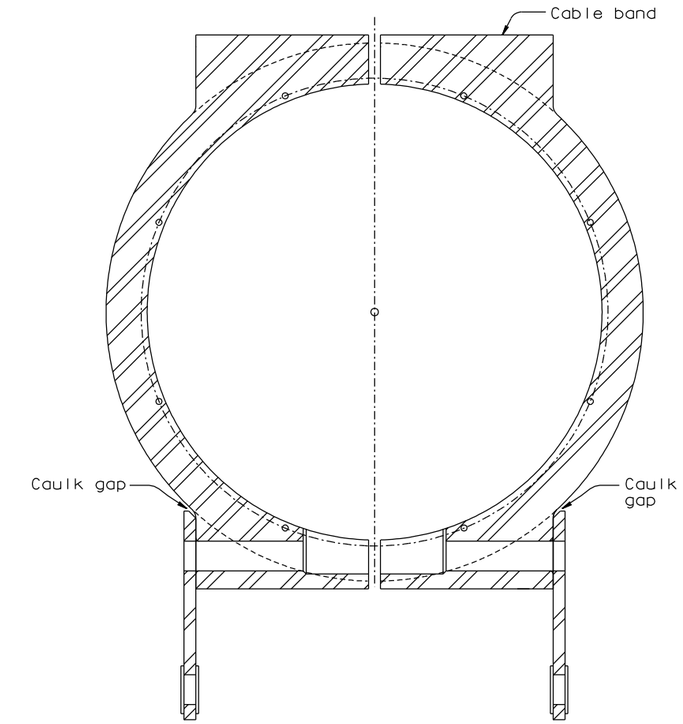

SECTION D-D
1:5

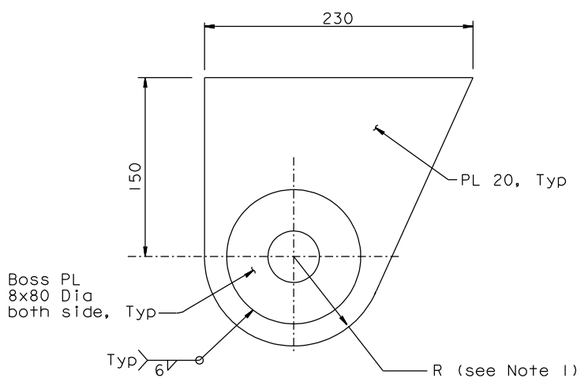

ANCHOR PLATE ASSEMBLY DETAIL
1:2.5

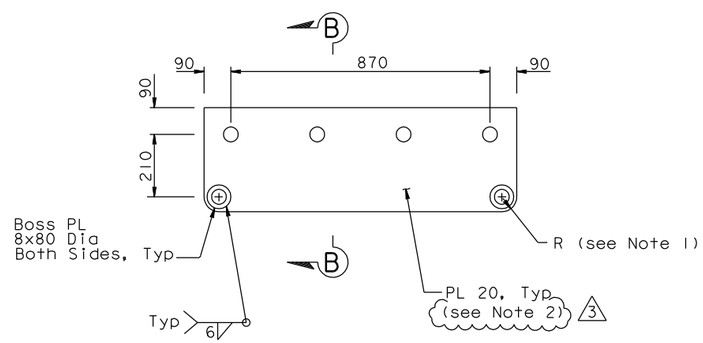

CABLE BAND PLATE ASSEMBLY DETAIL
1:10

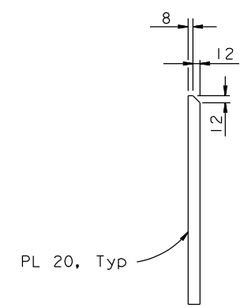

SECTION B-B
1:5

NOTES:

1. For pin details see "Cable Handrope Details No. 2" sheet.
2. At the Contractor's option, 36 mm assembly plates without boss plates may be used in lieu of the detail shown, subject to review and approval of the Engineer. (3)

CONTRACT CHANGE ORDER NO. _____
SHEET ____ OF ____

REQUESTS FOR INFORMATION NOT ADDRESSED IN THIS CCO REMAIN IN FORCE

MARK	DATE	DESCRIPTIONS	BY	CH'D	CCO#
3	01/28/11	MISCELLANEOUS CABLE SYSTEM DETAILS	TH	GB	3751
2	06/22/07	WELDED PADEYES	NV	TH	41
1	04/20/07	WEST ANCHORAGE ACCESS DETAILS	GB	TH	28

REVISIONS

R. Valizadeh/V. Toan/Y.L./W.L./F.C.
DESIGN OVERSIGHT
SIGN OFF DATE 01/28/11

	BY	CHECKED
DESIGN	T. Ho	N. Vo
DETAILS	J. Sun	N. Vo
QUANTITIES	T. Ho	N. Vo

PREPARED FOR THE STATE OF CALIFORNIA DEPARTMENT OF TRANSPORTATION

ALL DIMENSIONS ARE IN MILLIMETERS UNLESS OTHERWISE SHOWN

R. Manzanarez
PROJECT ENGINEER

BRIDGE NO. 34-0006L/R
KILOMETER POST 13.2/13.9

SAN FRANCISCO OAKLAND BAY BRIDGE
EAST SPAN SEISMIC SAFETY PROJECT
SELF-ANCHORED SUSPENSION BRIDGE
(SUPERSTRUCTURE & TOWER)

WEST ANCHORAGE ACCESS DETAILS NO. 3

Rev. Date: 5-18-98

ORIGINAL SCALE IN MILLIMETERS FOR REDUCED PLANS 0 10 20 30 40 50 60 70 80 90 100

CU 04
EA 0120F1

DISREGARD PRINTS BEARING EARLIER REVISION DATES

REVISION DATES (PRELIMINARY STAGE ONLY) 08/02/99 05/31/01 04/08/02 07/09/02 12/19/02 09/06/04

SHEET 495R3 OF

FILE => I:\bb\04-012001\sas\contract plans and cco\cco\cco#37s1\1-original 01-28-11\dgn\akacc02e.dgn

100 % PS&E

USERNAME => arivera DATE PLOTTED => 27 JAN 2011 TIME PLOTTED => 15:58:27