DIST.	COUNTY	ROUTE	KILOMETER POST TOTAL PROJECT	SHEET NO.	TOTAL SHEETS
04	SF	80	13.2/13.9	744R3	1204

Caltrans Metric

George Baker
REGISTERED ENGINEER - CIVIL
1-27-03
PLANS APPROVAL DATE

REGISTERED PROFESSIONAL ENGINEER George S. Baker No. C 57112 Exp. 12/31/05 CIVIL STATE OF CALIFORNIA

The State of California or its officers or agents shall not be responsible for the accuracy or completeness of electronic copies of this plan sheet.

T.Y. LIN / MOFFATT & NICHOL
825 BATTERY STREET
SAN FRANCISCO, CA 94111

Caltrans now has a web site! To get to the web site, go to: http://www.dot.ca.gov

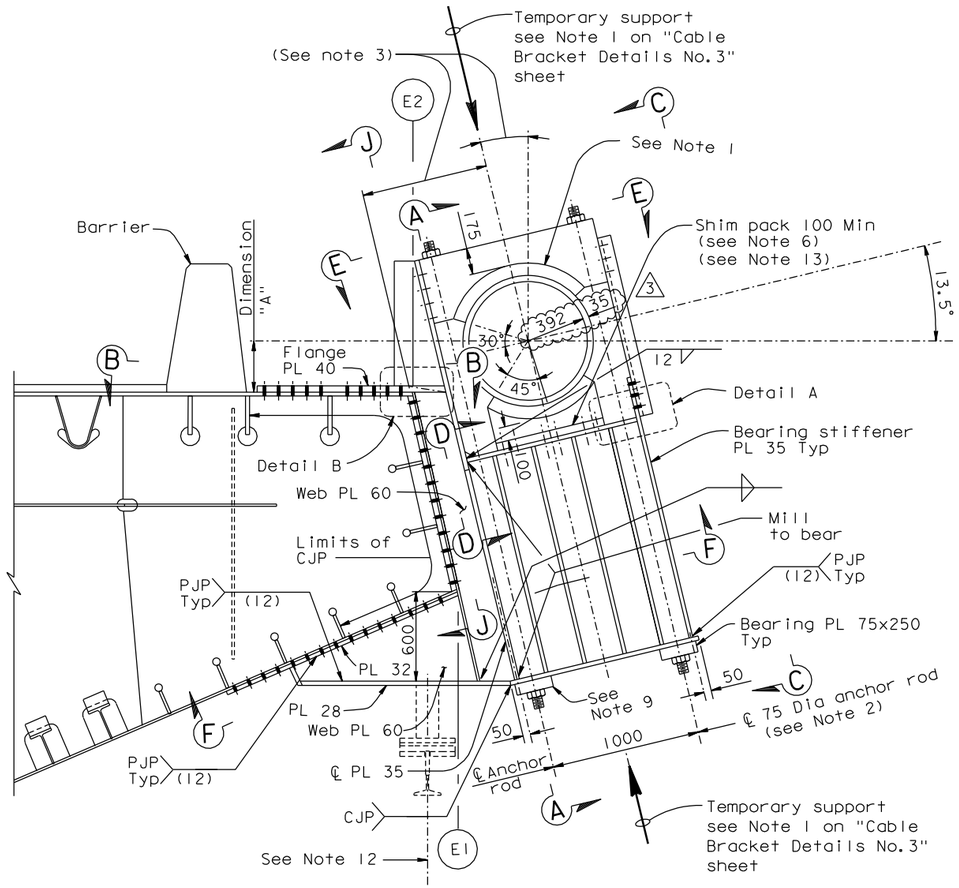

ELEVATION

CABLE BRACKET AT PP 112, 114 AND 116

1:20 (PP 110 similar) (See Note 14)

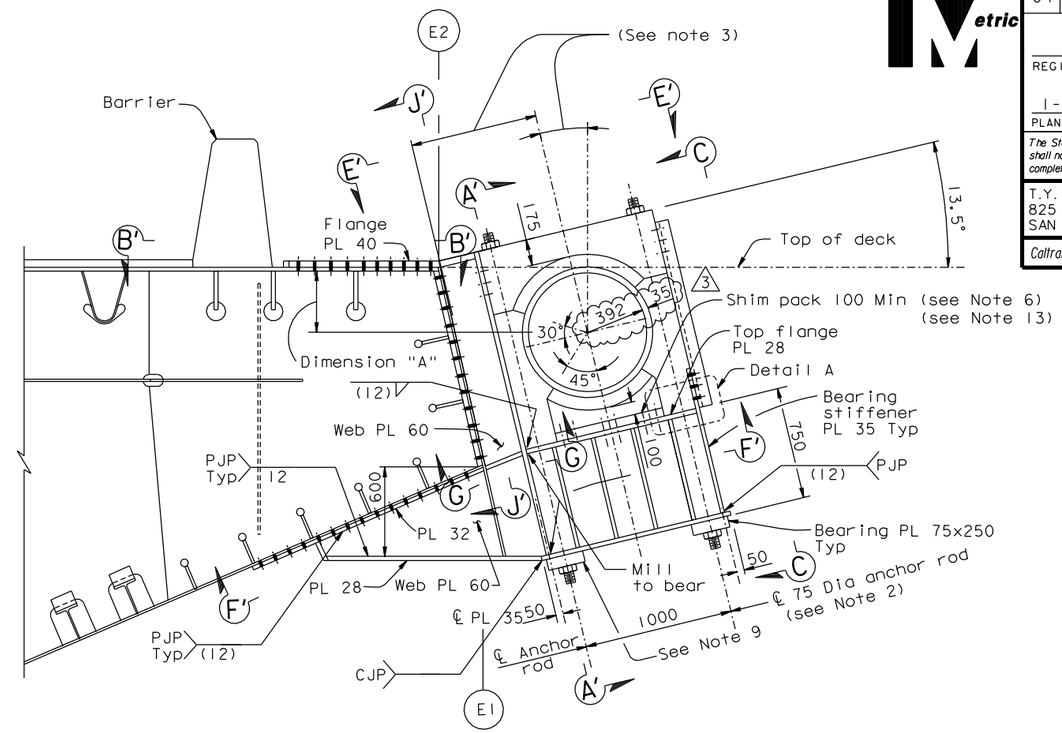

ELEVATION

ALTERNATIVE CABLE BRACKET (See Note 4)

1:20

PANEL POINT	DIMENSION "A" (SEE NOTE 3)	
	NORTH CABLE	SOUTH CABLE
110	960	1075 Above deck
112	545 Above deck	630 Above deck
114	240 Above deck	300 Above deck
116	0.0	0.0
ALTERNATIVE	BELOW DECK	BELOW DECK

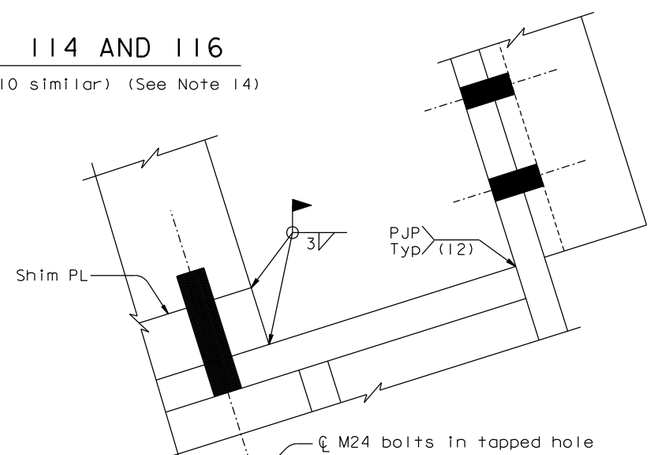

DETAIL A

1:2.5

NOTES:

1. For details of elastomeric bearing see "Cable Band Details No.5" sheet.
2. For anchor rod material, see "General Notes" sheet.
3. The Contractor shall compute dimension "A" for construction using the cable profile of his Erection Plan. All permanent components shall be fabricated to fit the computed cable profile.
4. If Contractor's actual cable center lies below top of deck the alternative bracket may be used.
5. At PP114 and PP116 the brackets should be located so as to apply no load to the cable at the completion of construction.
6. The Contractor shall allow for the compression of the elastomeric bearing due to the permanent anchor rods in his fabrication and shimming. See "Cable Bracket Details No.3" sheet.
7. For "Cable Bracket Details" sheets all bolts shall be detailed according to the "Bolt Dimension Table". See "Typical Girder Details No.1" sheet. All bolts are HS, unless noted otherwise.
8. For "Cable Bracket Details" sheets, unless noted otherwise all fillet welds shall be 6 mm for plate sizes not greater than 20 mm. For plates greater than 20 mm, fillet welds shall be 8 mm, unless noted otherwise.
9. At PP116 rod bearing interferes with traveler rails. For alternative rod bearing, see Detail C on "Cable Bracket Details No.2" sheet.
10. For Sections A-A, A'-A', B-B, B'-B', C-C, D-D and Detail B, see "Cable Bracket Details No.2" sheet.
11. For Views E-E, E'-E', Sections F-F, F'-F', G-G, J-J and J'-J', see "Cable Bracket Details No.3" sheet.
12. For location and details of traveler rail support, see "Traveler Rail Details" sheets.
13. Shim plate thickness shall be 10 mm each.
14. The Contractor shall provide shop drawings for two cable brackets and for two suspender brackets at PP 110 ("E" line and "W" line). The Contractor shall fabricate and install either a cable bracket or a suspender bracket at PP 110 ("E" line and "W" line) as directed by the Engineer. For suspender bracket details see "Suspender Bracket Details" sheets.

ALL DIMENSIONS ARE IN MILLIMETERS UNLESS OTHERWISE SHOWN

REGISTERED PROFESSIONAL ENGINEER Marwan N. Nader No. C 054426 Exp. 12/31/11 CIVIL STATE OF CALIFORNIA

FOR REVISIONS ONLY

CONTRACT CHANGE ORDER NO. ____
SHEET ____ OF ____

REQUESTS FOR INFORMATION NOT ADDRESSED IN THIS CCO REMAIN IN FORCE

MARK	DATE	DESCRIPTIONS	BY	CH'D	CCO#
3	01/28/11	MISCELLANEOUS CABLE SYSTEM DETAILS	GB	MN	37S1
2	12/18/09	SUSPENDER BRACKETS	GB	MN	104
1	02/20/09	SUSPENDER BRACKETS	GB	MN	104

REVISIONS

R. Valizadeh/V. Toan/Y.L./W.L./F.C.
DESIGN OVERSIGHT
SIGN OFF DATE 01/28/11

Rev. Date: 5-18-98

	BY	CHECKED
DESIGN	G. Baker	T. McMeans
DETAILS	S. Camo	T. McMeans
QUANTITIES	D. Turner	C. Mibelli

PREPARED FOR THE STATE OF CALIFORNIA DEPARTMENT OF TRANSPORTATION

R. Manzanarez
PROJECT ENGINEER

BRIDGE NO. 34-0006L/R
KILOMETER POST 13.2/13.9

SAN FRANCISCO OAKLAND BAY BRIDGE
EAST SPAN SEISMIC SAFETY PROJECT
SELF-ANCHORED SUSPENSION BRIDGE
(SUPERSTRUCTURE & TOWER)

CABLE BRACKET DETAILS NO. 1

ORIGINAL SCALE IN MILLIMETERS FOR REDUCED PLANS 0 10 20 30 40 50 60 70 80 90 100

CU 04
EA 0120F1

DISREGARD PRINTS BEARING EARLIER REVISION DATES

REVISION DATES (PRELIMINARY STAGE ONLY): 08/07/99 05/31/01 04/08/02 07/04/02 12/19/02

SHEET 327R3 OF

FILE => I:\bb\04-012001\sas\contract plans and cco\cco\cco#37s1\1-original 01-28-11\dgn\agcbr01.dgn

USERNAME => orivera DATE PLOTTED => 27 JAN 2011 TIME PLOTTED => 15:57:02

100 % PS&E