DIST.	COUNTY	ROUTE	KILOMETER POST TOTAL PROJECT	SHEET NO.	TOTAL SHEETS
04	SF	80	13.2/13.9	761R1	1204

Caltrans Metric

George Baker
REGISTERED ENGINEER - CIVIL
12-6-04
PLANS APPROVAL DATE

REGISTERED PROFESSIONAL ENGINEER George S. Baker No. C 57112 Exp. 12/31/05 CIVIL STATE OF CALIFORNIA

The State of California or its officers or agents shall not be responsible for the accuracy or completeness of electronic copies of this plan sheet.

T.Y. LIN / MOFFATT & NICHOL
825 BATTERY STREET
SAN FRANCISCO, CA 94111

Caltrans now has a web site! To get to the web site, go to: http://www.dot.ca.gov

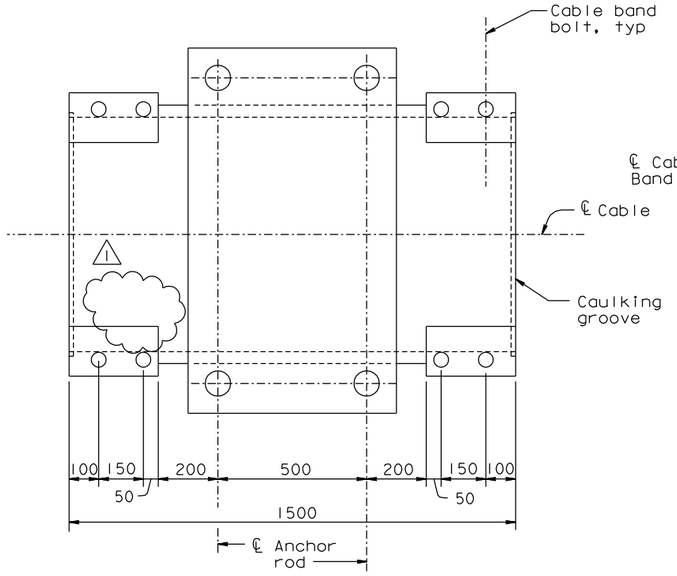

PLAN VIEW
(View parallel to the Cable Plane)

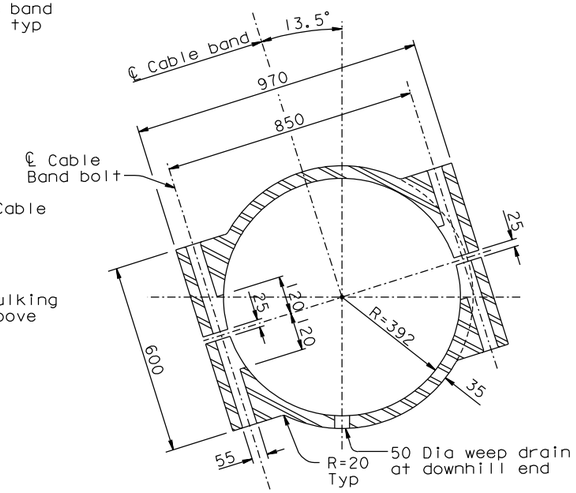

SECTION A-A
1:10

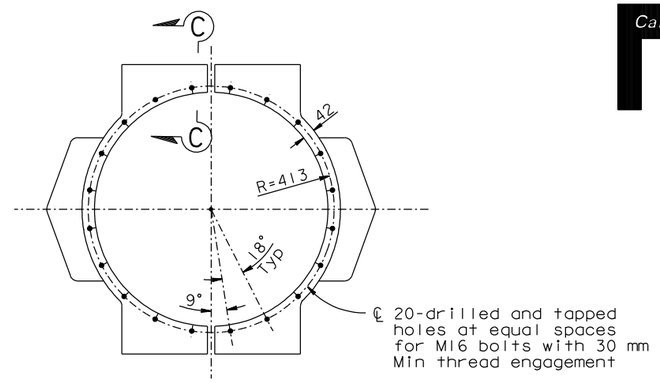

VIEW D-D FOR B11, B13 AND B15
1:10

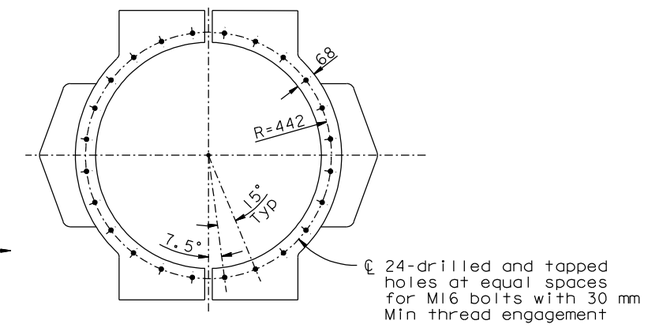

VIEW D-D FOR B16 ONLY
1:10

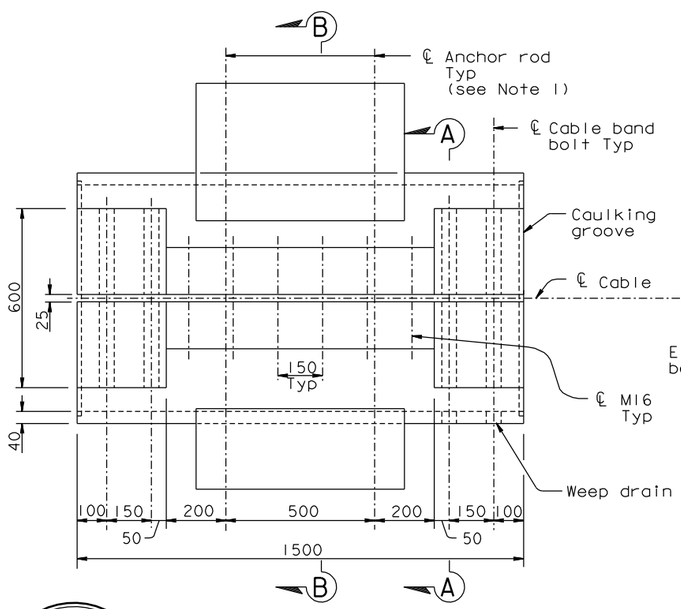

SIDE VIEW
(View perpendicular to the Cable Plane)

BAND TYPE B14
1:10

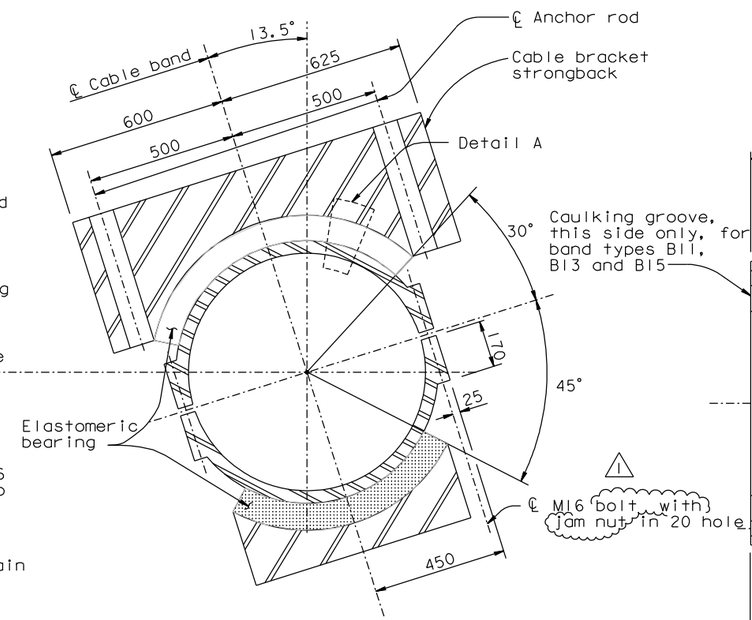

SECTION B-B

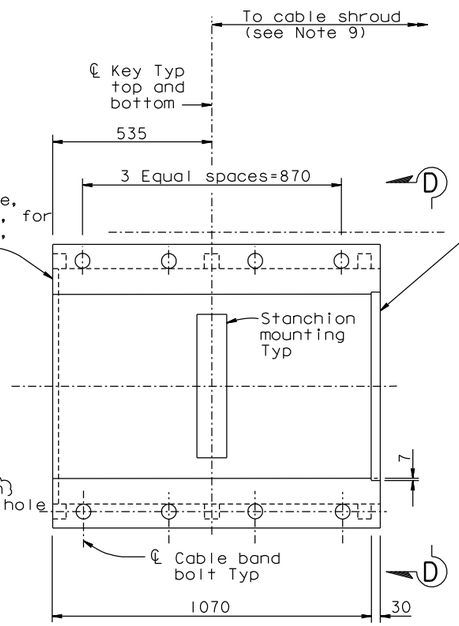

ELEVATION VIEW

BAND TYPE B15, B16 SIMILAR
1:10

NOTES:

1. For anchor rod details, see "Cable Bracket Details No. 1" sheet.
2. For Detail A and Section C-C, see "Cable Band Details No. 5" sheet.
3. For typical details not shown, see "Cable Band Details No. 3" sheet.
4. For caulking groove details, see "Cable Band Details No. 5" sheet.
5. For machined surfaces of cable bands, see "Cable Band Details No. 3" sheet.
6. Surfaces in contact with elastomeric bearings shall be geometrically true within ±1 mm. Surface roughness shall be finished to ANSI 1000.
7. Bolt bearing surface roughness shall be finished to ANSI 500.
8. Extension for Cable Shroud shall be part of cable band casting. For B16 only, both ends shall have Cable Shroud extensions.
9. For Cable Shrouds, see "West Cable Shroud Details", "Tower Cable Shroud Details" and "East Cable Shroud Details" sheets.

REGISTERED PROFESSIONAL ENGINEER Marwan N. Nader No. C 054426 Exp. 12/31/11 CIVIL STATE OF CALIFORNIA

FOR REVISIONS ONLY

CONTRACT CHANGE ORDER NO. _____
SHEET ___ OF ___

REQUESTS FOR INFORMATION NOT ADDRESSED IN THIS CCO REMAIN IN FORCE

ALL DIMENSIONS ARE IN MILLIMETERS UNLESS OTHERWISE SHOWN

R. Valizadeh/V. Toan/Y.L./W.L./F.C.
DESIGN OVERSIGHT
Roya Valizadeh / Vong Toan / Y. Liu
SIGN OFF DATE 02/18/11

MARK	DATE	DESCRIPTIONS	BY	CH'D	CCO#
1	02/18/11	MISCELLANEOUS CABLE SYSTEM DETAILS	GB	MN	37S1

REVISIONS

DESIGN	BY G. Baker	CHECKED	T. McMeans
DETAILS	BY S. Camo	CHECKED	P. Ritchie
QUANTITIES	BY C. Mauch	CHECKED	C. Mibelli

PREPARED FOR THE STATE OF CALIFORNIA DEPARTMENT OF TRANSPORTATION

R. Manzanarez
PROJECT ENGINEER

BRIDGE NO. 34-0006L/R
KILOMETER POST 13.2/13.9

SAN FRANCISCO OAKLAND BAY BRIDGE
EAST SPAN SEISMIC SAFETY PROJECT
SELF-ANCHORED SUSPENSION BRIDGE
(SUPERSTRUCTURE & TOWER)

CABLE BAND DETAILS NO. 4

Rev. Date: 5-18-98

ORIGINAL SCALE IN MILLIMETERS FOR REDUCED PLANS 0 10 20 30 40 50 60 70 80 90 100

CU 04
EA 0120F1

DISREGARD PRINTS BEARING EARLIER REVISION DATES

REVISION DATES (PRELIMINARY STAGE ONLY) 01/15/99 05/15/99 08/06/99 05/17/01 04/08/02 07/01/02 12/19/02

SHEET 344R1 OF

FILE => I:\bb\04-012001\sas\contract plans and cco\cco\cco*37s1\1-update 02-18-11\dgn\agcbd04.dgn

USERNAME => DWinrow DATE PLOTTED => 18 FEB 2011 TIME PLOTTED => 11:12:57

100% PS&E