Caltrans now has a web site! To get to the web site, go to: http://www.dot.ca.gov

DIST.	COUNTY	ROUTE	KILOMETER POST TOTAL PROJECT	SHEET NO.	TOTAL SHEETS
04	SF	80	13.2/13.9	732R1	1204

George Baker
REGISTERED ENGINEER - CIVIL
12-6-04
PLANS APPROVAL DATE

The State of California or its officers or agents shall not be responsible for the accuracy or completeness of electronic copies of this plan sheet.

REGISTERED PROFESSIONAL ENGINEER George S. Baker No. C 57112 Exp. 12/31/05 CIVIL STATE OF CALIFORNIA

T.Y. LIN / MOFFATT & NICHOL
825 BATTERY STREET
SAN FRANCISCO, CA 94111

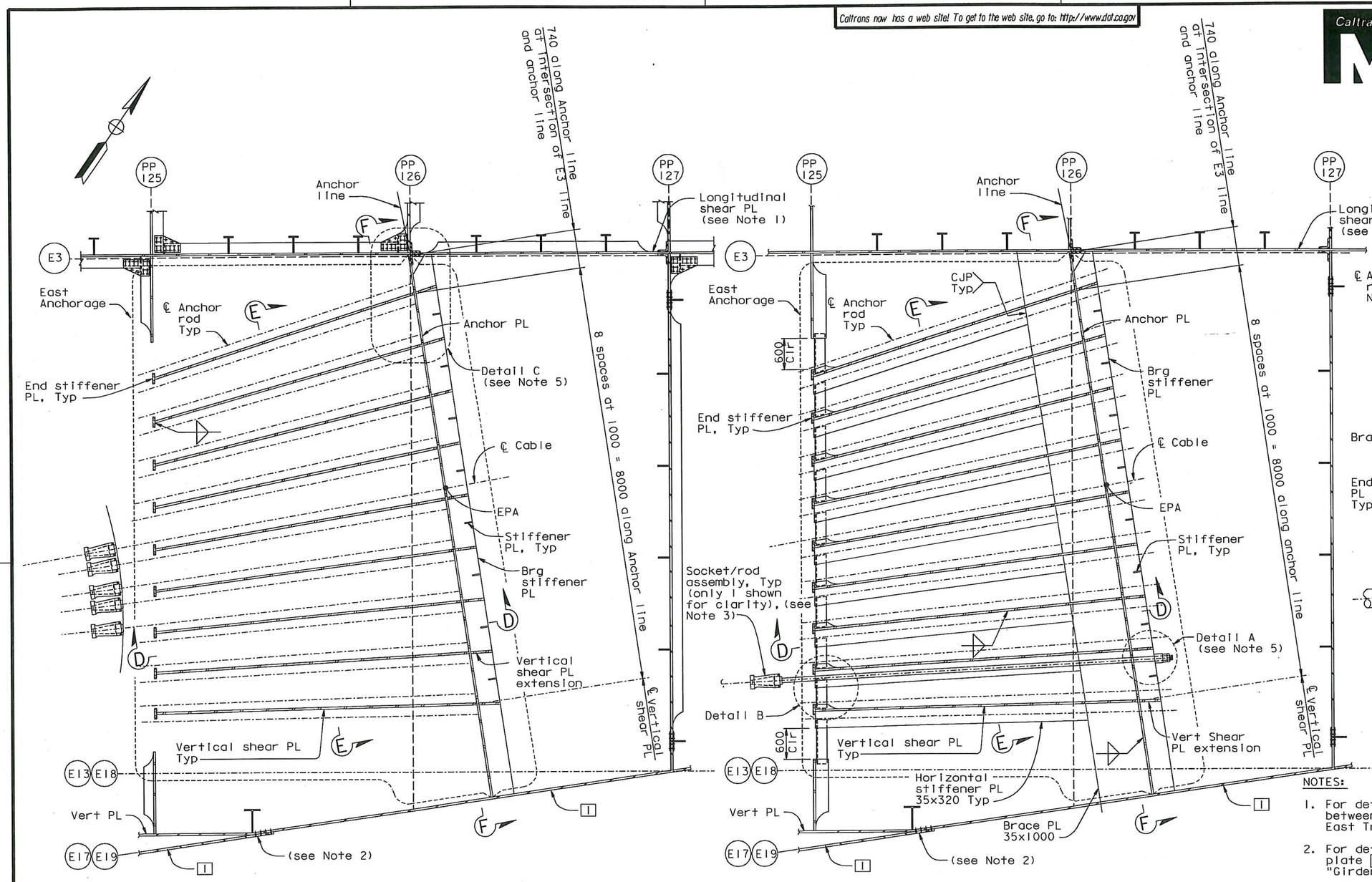

AT LEVEL OF TYPICAL BEARING STIFFENER

AT LEVEL OF BRACE PLATE

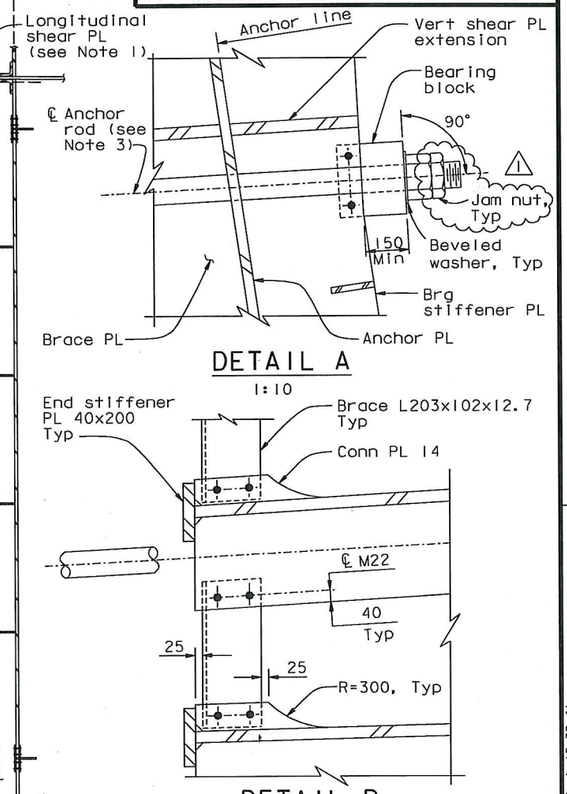

DETAIL A
1:10

DETAIL B
1:10

NOTES:

1. For details of longitudinal shear plate between PP125 and PP127, see "Girder At East Transition No. 16" sheet.
2. For details of splice connection at girder plate [1] and vertical plate convergence, see "Girder At East Transition Details" sheets.
3. For strand socket and anchor rod details, see "East Cable Anchorage Details" sheet.
4. For Detail C and Sections D-D, E-E and F-F, see "East Cable Anchorage "E" Line Layout No. 3" sheet.
5. Machining of bearing stiffener not shown in plan view.

REGISTERED PROFESSIONAL ENGINEER Marwan N. Nader No. C 054426 Exp. 12/31/11 CIVIL STATE OF CALIFORNIA

FOR REVISIONS ONLY

CONTRACT CHANGE ORDER NO. 37S01
SHEET 3 OF 11

PLAN SECTION C-C
1:40

REQUESTS FOR INFORMATION NOT ADDRESSED IN THIS CCO REMAIN IN FORCE

ALL DIMENSIONS ARE IN MILLIMETERS UNLESS OTHERWISE SHOWN

100 % PS&E

SAN FRANCISCO OAKLAND BAY BRIDGE
EAST SPAN SEISMIC SAFETY PROJECT
SELF-ANCHORED SUSPENSION BRIDGE
(SUPERSTRUCTURE & TOWER)

EAST CABLE ANCHORAGE "E" LINE LAYOUT NO. 2

R. Valizadeh/V. Toan/Y.L./W.L./F.C.
DESIGN OVERSIGHT
Reza Valizadeh / Vong Toan / Y. Liu
SIGN OFF DATE 01/28/11

MARK	DATE	DESCRIPTIONS	BY	CH'D	CCO#
1	01/28/11	MISCELLANEOUS CABLE SYSTEM DETAILS	GB	MN	37S1

REVISIONS

DESIGN	BY G. Baker	CHECKED J. Kuliki	
DETAILS	BY M. Gulyas	CHECKED T. McMeans	
QUANTITIES	BY M. Gulyas	CHECKED M. Roberts	

PREPARED FOR THE STATE OF CALIFORNIA DEPARTMENT OF TRANSPORTATION

R. Manzanarez
PROJECT ENGINEER

BRIDGE NO. 34-0006L/R
KILOMETER POST 13.2/13.9

Rev. Date: 5-18-98

ORIGINAL SCALE IN MILLIMETERS FOR REDUCED PLANS 0 10 20 30 40 50 60 70 80 90 100

CU 04
EA 0120F1

DISREGARD PRINTS BEARING EARLIER REVISION DATES

REVISION DATES (PRELIMINARY STAGE ONLY) 01/15/99 05/15/99 08/02/99 05/31/01 04/08/02 07/01/02 12/19/02

SHEET 315R1 OF

FILE => I:\bb\04-012001\sas\contract plans and cco\cco\cco#37s1\1-original 01-28-11\dgn\agan105.dgn

USERNAME => arivera DATE PLOTTED => 27 JAN 2011 TIME PLOTTED => 15:39:41

DIST.	COUNTY	ROUTE	KILOMETER POST TOTAL PROJECT	SHEET NO.	TOTAL SHEETS
04	SF	80	13.2/13.9	733R2	1204

George Baker
REGISTERED ENGINEER - CIVIL
12-6-04
PLANS APPROVAL DATE

REGISTERED PROFESSIONAL ENGINEER George S. Baker No. C57112 Exp. 12/31/05 CIVIL STATE OF CALIFORNIA

The State of California or its officers or agents shall not be responsible for the accuracy or completeness of electronic copies of this plan sheet.

T.Y. LIN / MOFFATT & NICHOL
825 BATTERY STREET
SAN FRANCISCO, CA 94111

Caltrans now has a web site! To get to the web site, go to: http://www.dot.ca.gov

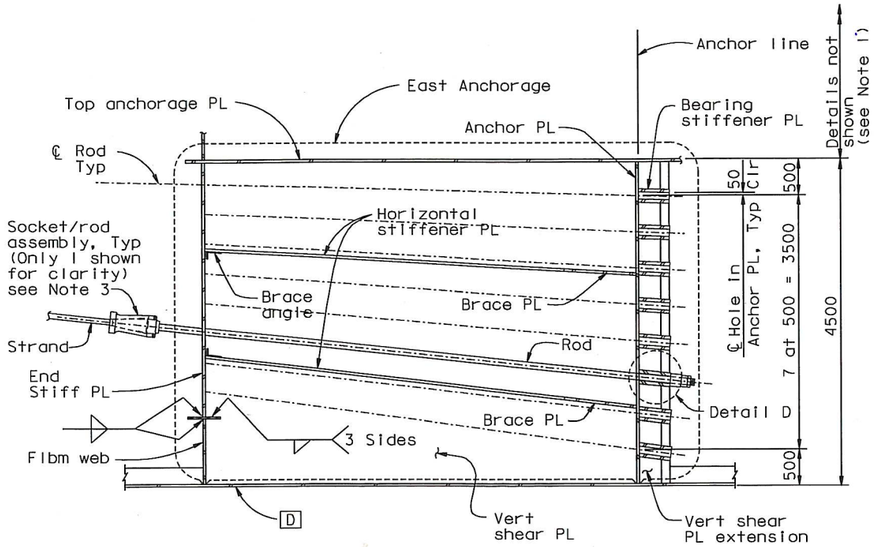

SECTION D-D
1:40

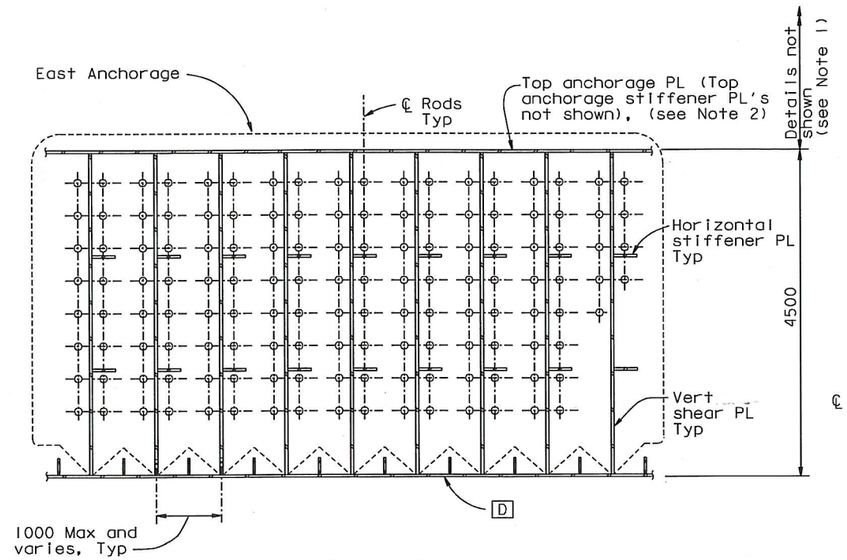

SECTION E-E
1:40

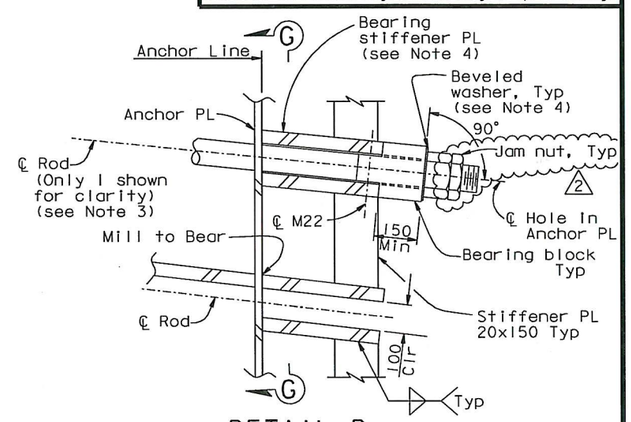

DETAIL D
1:10

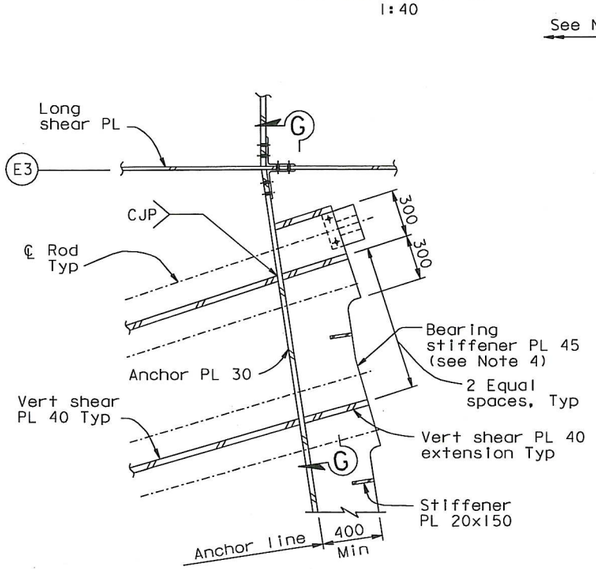

DETAIL C
1:20

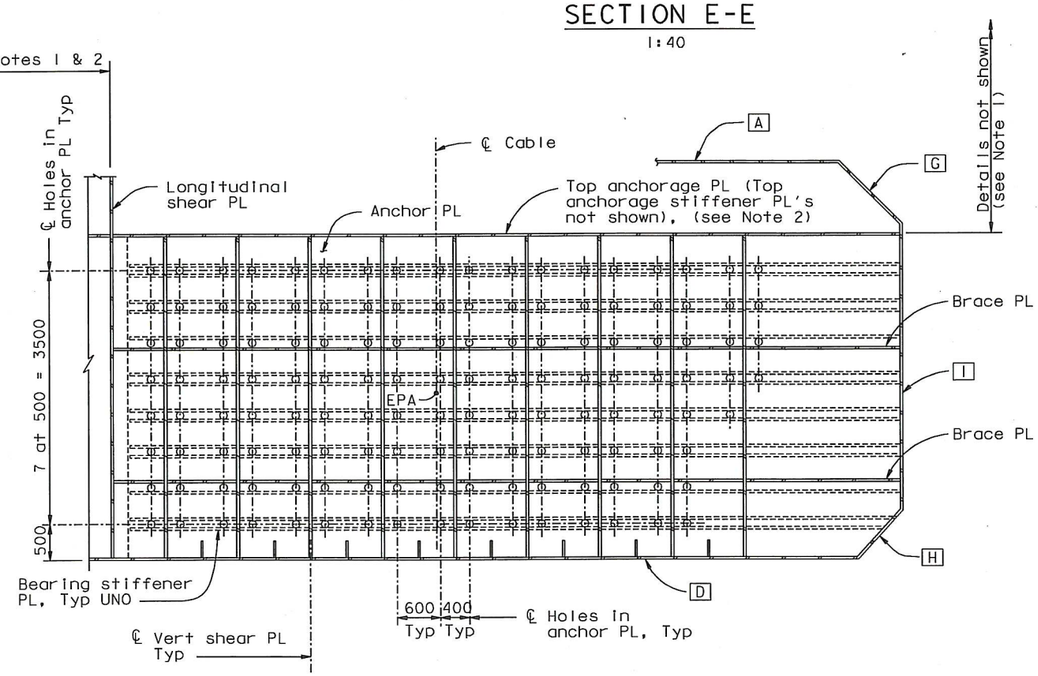

SECTION F-F
1:40

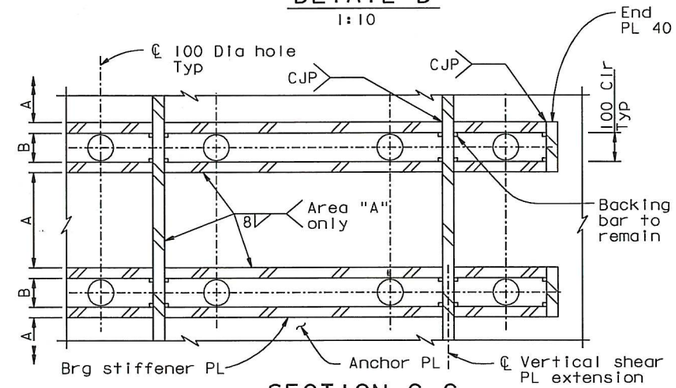

SECTION G-G
1:10

NOTES:

1. For girder details not shown, see "Girder At East Transition" sheets.
2. For top anchorage plate details not shown, see "Crossbeam at East Anchorage" and "Girder At East Transition" sheets.
3. For strand socket, transition anchor rod and bearing block details, see "East Cable Anchorage Details" sheet.
4. Bearing stiffener plates shall be machined to level the bearing block under the nut. Washers may be beveled to 1°.

REGISTERED PROFESSIONAL ENGINEER Daniel J. Turner No. C 65033 Exp. 06/30/11 CIVIL STATE OF CALIFORNIA

FOR REVISIONS ONLY

CONTRACT CHANGE ORDER NO. 37501
SHEET 4 OF 11

REQUESTS FOR INFORMATION NOT ADDRESSED IN THIS CCO REMAIN IN FORCE

ALL DIMENSIONS ARE IN MILLIMETERS UNLESS OTHERWISE SHOWN

MARK	DATE	DESCRIPTIONS	BY	CH'D	CCO#
2	01/28/11	MISCELLANEOUS CABLE SYSTEM DETAILS	DT	GB	37SI
1	08/28/09	BEARING BLOCKS	DT	GB	78

REVISIONS

R. Valizadeh/V. Toan/Y.L./W.L./F.C.
DESIGN OVERSIGHT
SIGN OFF DATE 0/28/11

Rev. Date: 5-18-98

DESIGN	BY G. Baker	CHECKED J. Kullke	
DETAILS	BY M. Guylas	CHECKED T. McMeans	
QUANTITIES	BY M. Guylas	CHECKED M. Roberts	

PREPARED FOR THE STATE OF CALIFORNIA DEPARTMENT OF TRANSPORTATION

R. Manzanarez
PROJECT ENGINEER

CU 04
EA 0120F1

BRIDGE NO. 34-0006L/R
KILOMETER POST 13.2/13.9

ORIGINAL SCALE IN MILLIMETERS FOR REDUCED PLANS 0 10 20 30 40 50 60 70 80 90 100

DISREGARD PRINTS BEARING EARLIER REVISION DATES

SAN FRANCISCO OAKLAND BAY BRIDGE
EAST SPAN SEISMIC SAFETY PROJECT
SELF-ANCHORED SUSPENSION BRIDGE
(SUPERSTRUCTURE & TOWER)

EAST CABLE ANCHORAGE "E" LINE LAYOUT NO. 3

REVISION DATES (PRELIMINARY STAGE ONLY) 01/23/99 05/13/99 09/07/99 05/31/01 04/08/02 07/09/02 12/18/02 11/13/05

SHEET 316R2 OF

FILE => I:\bb\04-0120FI\sas\contract plans and cco\cco\cco*37si\1-original 01-28-11\dgn\dgan106.dgn

100 % PS&E

USERNAME => arivera DATE PLOTTED => 27 JAN 2011 TIME PLOTTED => 15:54:24

NOTES:

1. For details of longitudinal shear plate between P125 and PP127, see "Girder At East Transition No. 16" sheet.
2. For details of splice connection at girder plate and vertical plate convergence, see "East Cable Anchorage Details" sheet.
3. For strand socket and anchor rod details, see "East Cable Anchorage Details" sheet.
4. For Detail C and Sections D-D, E-E and F-F, see "East Cable Anchorage "W" Line Layout No. 3" sheet.
5. Machining of bearing stiffener not shown in plan view.

To get to the web site, go to: http://www.dot.ca.gov

Caltrans Metric

DIST.	COUNTY	ROUTE	KILOMETER POST TOTAL PROJECT	SHEET NO.	TOTAL SHEETS
04	SF	80	13.2/13.9	735R1	1204

George Baker
REGISTERED ENGINEER - CIVIL
12-6-04
PLANS APPROVAL DATE

REGISTERED PROFESSIONAL ENGINEER George S. Baker No. C57112 Exp. 12/31/05 CIVIL STATE OF CALIFORNIA

The State of California or its officers or agents shall not be responsible for the accuracy or completeness of electronic copies of this plan sheet.

T.Y. LIN / MOFFATT & NICHOL
825 BATTERY STREET
SAN FRANCISCO, CA 94111

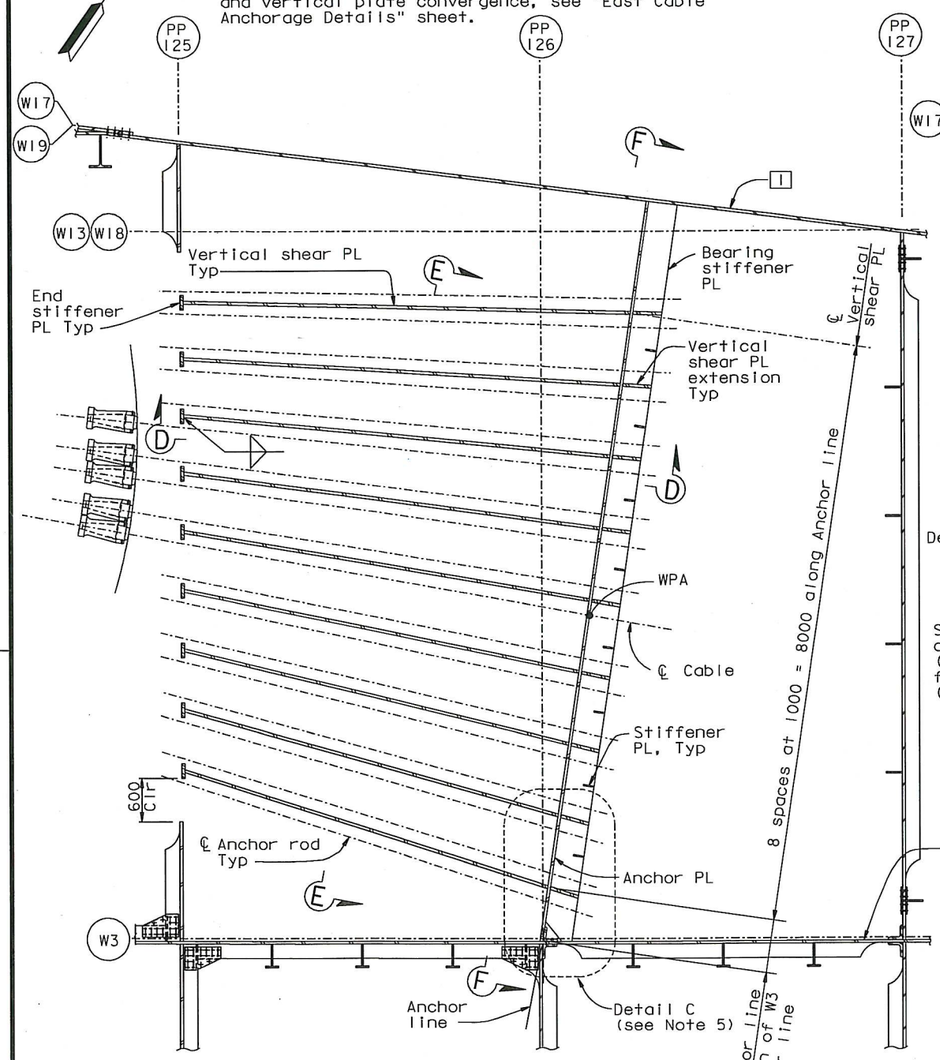

AT LEVEL OF TYPICAL BEARING STIFFENER

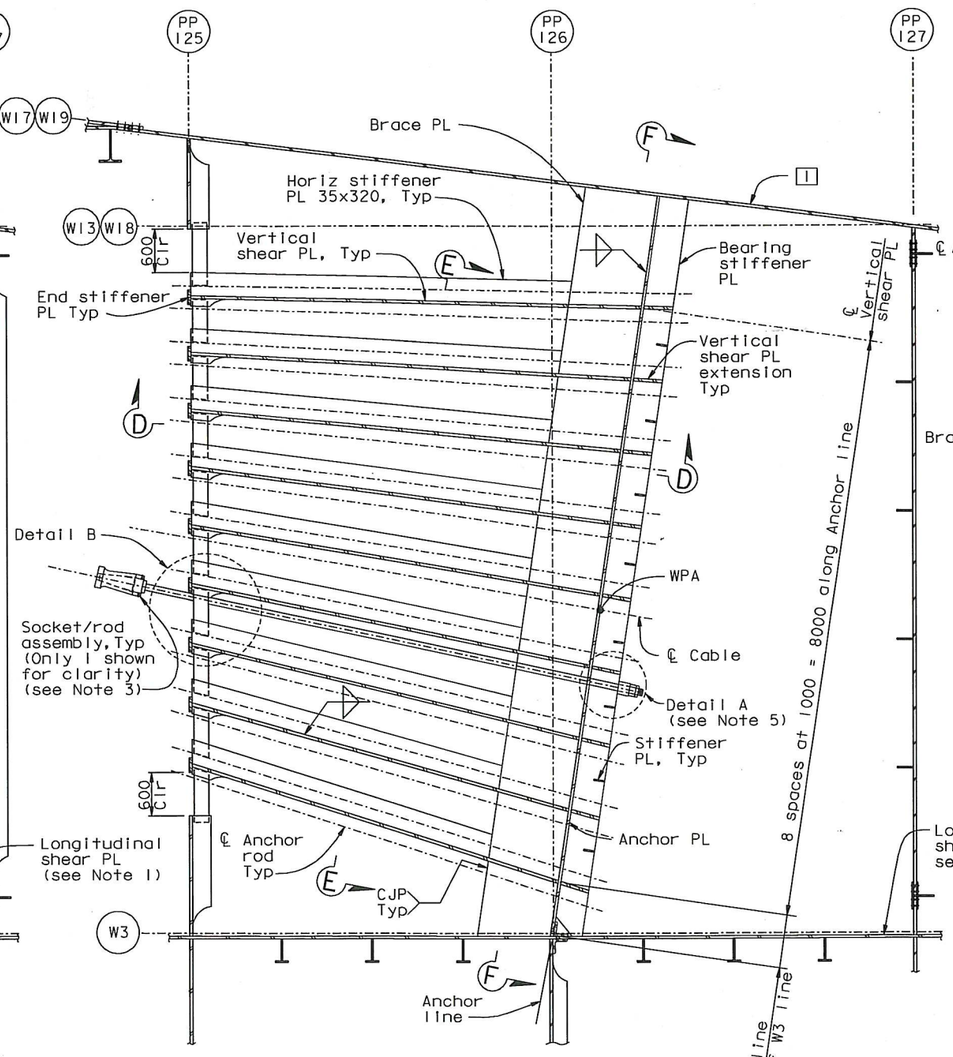

AT LEVEL OF BRACE PLATE

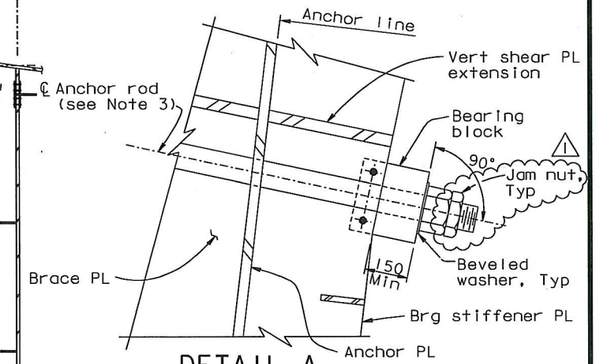

DETAIL A
1:10

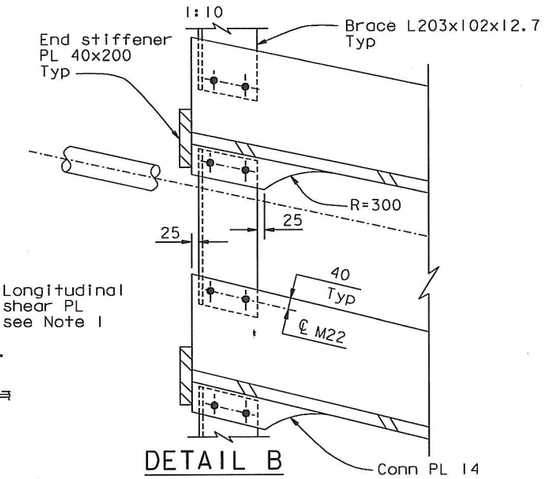

DETAIL B
1:10

PLAN SECTION C-C
1:40

ALL DIMENSIONS ARE IN MILLIMETERS UNLESS OTHERWISE SHOWN

Marwan N. Nader
REGISTERED PROFESSIONAL ENGINEER No. C 054426 Exp. 12/31/11 CIVIL STATE OF CALIFORNIA
FOR REVISIONS ONLY

CONTRACT CHANGE ORDER NO. 37S01
SHEET 5 OF 11

REQUESTS FOR INFORMATION NOT ADDRESSED IN THIS CCO REMAIN IN FORCE

MARK	DATE	DESCRIPTIONS	BY	CH'D	CCO#
1	01/28/11	MISCELLANEOUS CABLE SYSTEM DETAILS	GB	MN	37S1

REVISIONS

R. Vallzadeh/V. Toan/Y.L./W.L./F.C.
DESIGN OVERSIGHT
SIGN OFF DATE 01/28/11

Rev. Date: 5-18-98

	BY	CHECKED	
DESIGN	G. Baker	J. Kulikl	
DETAILS	M. Gulyas	T. McMeans	
QUANTITIES	M. Gulyas	M. Roberts	

PREPARED FOR THE STATE OF CALIFORNIA DEPARTMENT OF TRANSPORTATION

R. Manzanarez
PROJECT ENGINEER

CU 04
EA 0120F1

BRIDGE NO. 34-0006L/R
KILOMETER POST 13.2/13.9

SAN FRANCISCO OAKLAND BAY BRIDGE
EAST SPAN SEISMIC SAFETY PROJECT
SELF-ANCHORED SUSPENSION BRIDGE
(SUPERSTRUCTURE & TOWER)
EAST CABLE ANCHORAGE "W" LINE LAYOUT NO. 2

ORIGINAL SCALE IN MILLIMETERS FOR REDUCED PLANS 0 10 20 30 40 50 60 70 80 90 100

DISREGARD PRINTS BEARING EARLIER REVISION DATES

REVISION DATES (PRELIMINARY STAGE ONLY): 01/13/99 05/13/99 08/02/99 05/31/01 01/08/02 01/07/02 12/19/02

SHEET 318R1 OF

FILE => I:\bb\04-01200I\sas\contract plans and cco\cco\cco#37s1\1-original 01-28-11\dgn\agan108.dgn

100 % PS&E

USERNAME => orivera DATE PLOTTED => 27 JAN 2011 TIME PLOTTED => 15:55:18

DIST.	COUNTY	ROUTE	KILOMETER POST TOTAL PROJECT	SHEET NO.	TOTAL SHEETS
04	SF	80	13.2/13.9	736R2	1204

George Baker
REGISTERED ENGINEER - CIVIL
12-6-04
PLANS APPROVAL DATE

REGISTERED PROFESSIONAL ENGINEER George S. Baker No. C57112 Exp. 12/31/05 CIVIL STATE OF CALIFORNIA

The State of California or its officers or agents shall not be responsible for the accuracy or completeness of electronic copies of this plan sheet.

T.Y. LIN / MOFFATT & NICHOL
825 BATTERY STREET
SAN FRANCISCO, CA 94111

Caltrans now has a web site! To get to the web site, go to: http://www.dot.ca.gov

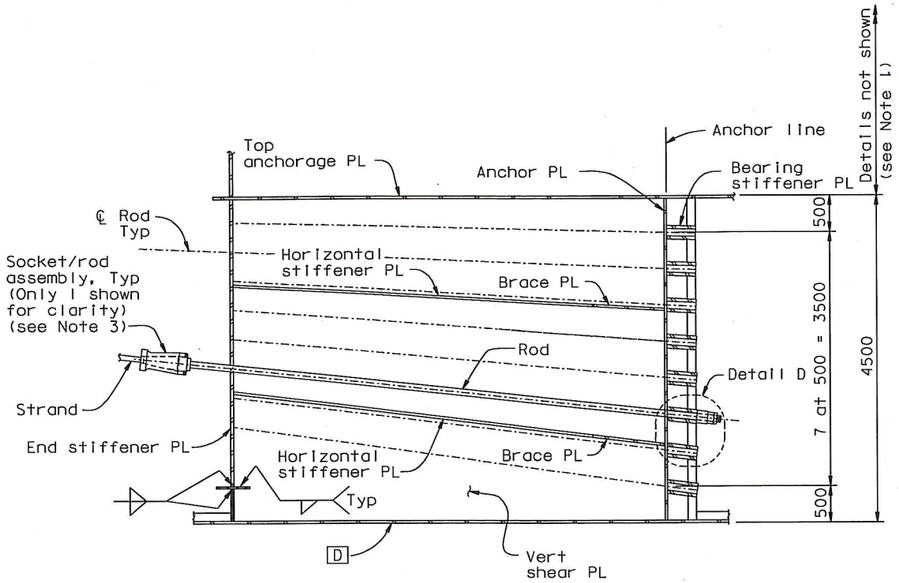

SECTION D-D
1:40

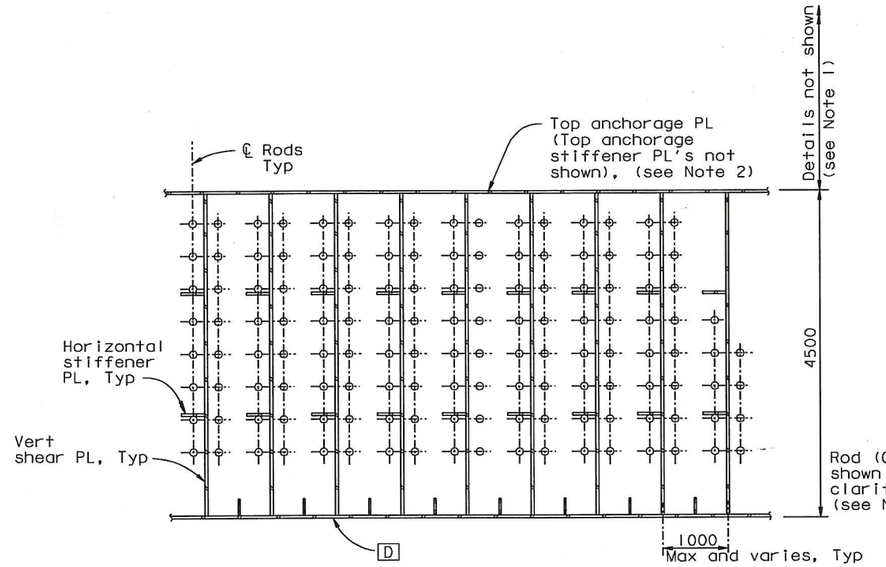

SECTION E-E
1:40

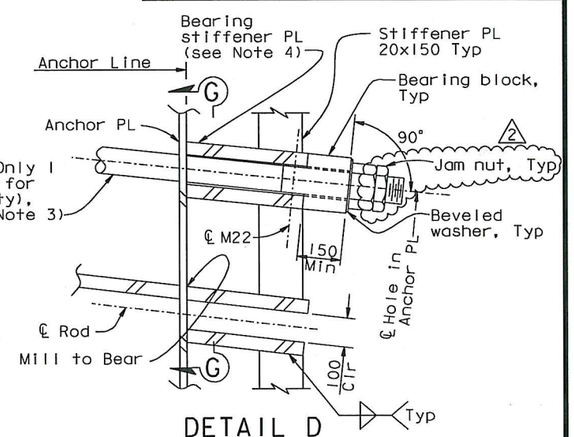

DETAIL D
1:10

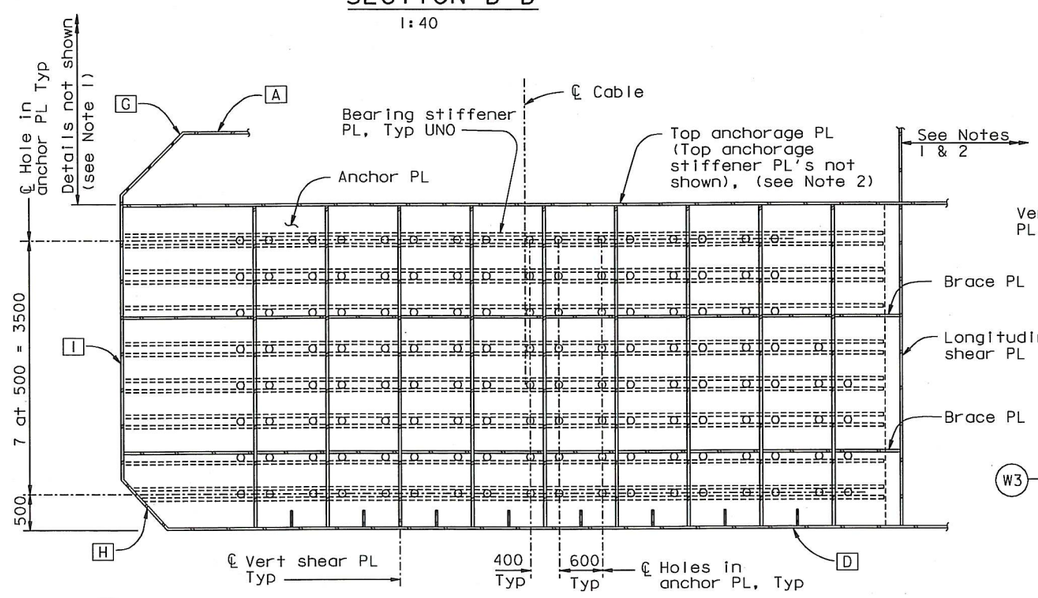

SECTION F-F
1:40

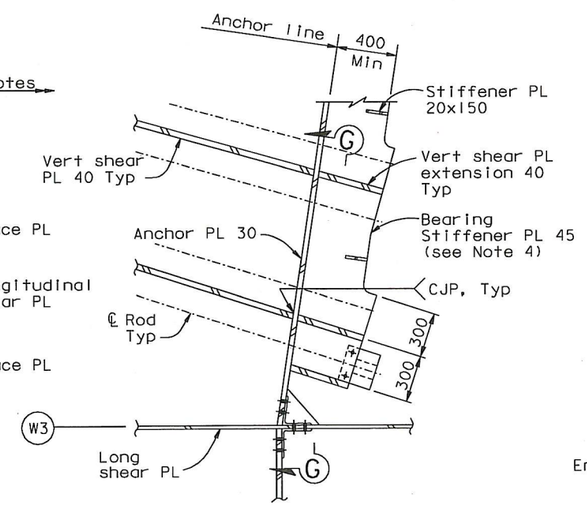

DETAIL C
1:20

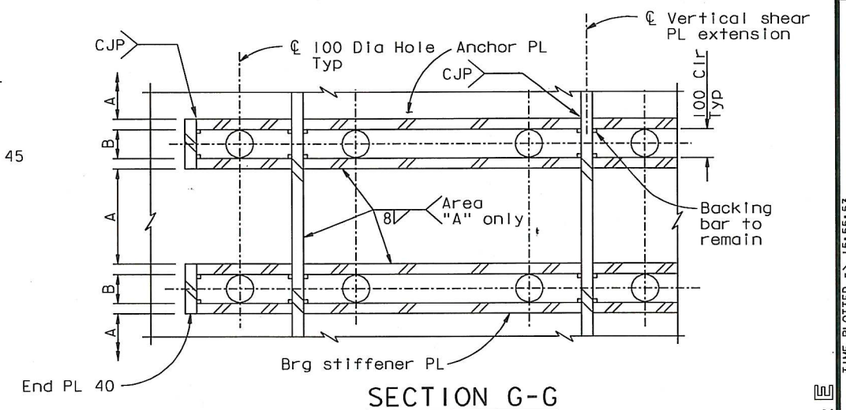

SECTION G-G
1:10

NOTES:

1. For girder details not shown, see "Girder At East Transition" sheets.
2. For top anchorage plate details not shown, see "Crossbeam At East Anchorage" and "Girder At East Transition" sheets.
3. For strand socket, transition anchor rod and bearing block details, see "East Cable Anchorage Details" sheet.
4. Bearing stiffeners plates shall be machined to level the bearing block under the nut. Washers may be beveled to 1°.

Daniel J. Turner
REGISTERED PROFESSIONAL ENGINEER Daniel J. Turner No. C 65033 Exp. 06/30/11 CIVIL STATE OF CALIFORNIA

FOR REVISIONS ONLY

CONTRACT CHANGE ORDER NO. 37s01
SHEET 6 OF 11

REQUESTS FOR INFORMATION NOT ADDRESSED IN THIS CCO REMAIN IN FORCE

ALL DIMENSIONS ARE IN MILLIMETERS UNLESS OTHERWISE SHOWN

R. Valizadeh/V. Toan/Y.L./W.L./F.C.
DESIGN OVERSIGHT
SIGN OFF DATE 01/28/11

MARK	DATE	DESCRIPTIONS	BY	CH'D	CCO#
2	01/28/11	MISCELLANEOUS CABLE SYSTEM DETAILS	DT	GB	37S1
1	08/28/09	BEARING BLOCKS	DT	GB	78

REVISIONS

DESIGN	BY G. Baker	CHECKED	J. Kullki
DETAILS	BY M. Gulyas	CHECKED	T. McMeans
QUANTITIES	BY M. Gulyas	CHECKED	M. Roberts

PREPARED FOR THE STATE OF CALIFORNIA DEPARTMENT OF TRANSPORTATION

R. Manzanarez
PROJECT ENGINEER

BRIDGE NO. 34-0006L/R
KILOMETER POST 13.2/13.9

SAN FRANCISCO OAKLAND BAY BRIDGE
EAST SPAN SEISMIC SAFETY PROJECT
SELF-ANCHORED SUSPENSION BRIDGE
(SUPERSTRUCTURE & TOWER)
EAST CABLE ANCHORAGE "W" LINE LAYOUT NO. 3

Rev. Date: 5-18-98

ORIGINAL SCALE IN MILLIMETERS FOR REDUCED PLANS 0 10 20 30 40 50 60 70 80 90 100

CU 04
EA 0120F1

DISREGARD PRINTS BEARING EARLIER REVISION DATES

REVISION DATES (PRELIMINARY STAGE ONLY) 01/13/99 05/13/99 08/08/99 05/31/01 04/08/02 01/04/02 12/18/02 11/13/05

SHEET 319R2 OF

FILE => I:\bb\04-01200I\sas\contract plans and cco\cco\cco#37s1\1-original 01-28-11\dgn\dgan109.dgn

100 % PS&E

USERNAME => arivera DATE PLOTTED => 27 JAN 2011 TIME PLOTTED => 15:55:53

DIST.	COUNTY	ROUTE	KILOMETER POST TOTAL PROJECT	SHEET NO.	TOTAL SHEETS
04	SF	80	13.2/13.9	737R2	1204

George Baker
REGISTERED ENGINEER - CIVIL
12-6-04
PLANS APPROVAL DATE

REGISTERED PROFESSIONAL ENGINEER George S. Baker No. C57112 Exp. 12/31/05 CIVIL STATE OF CALIFORNIA

The State of California or its officers or agents shall not be responsible for the accuracy or completeness of electronic copies of this plan sheet.

T.Y. LIN / MOFFATT & NICHOL
825 BATTERY STREET
SAN FRANCISCO, CA 94111

Caltrans now has a web site! To get to the web site, go to: http://www.dot.ca.gov

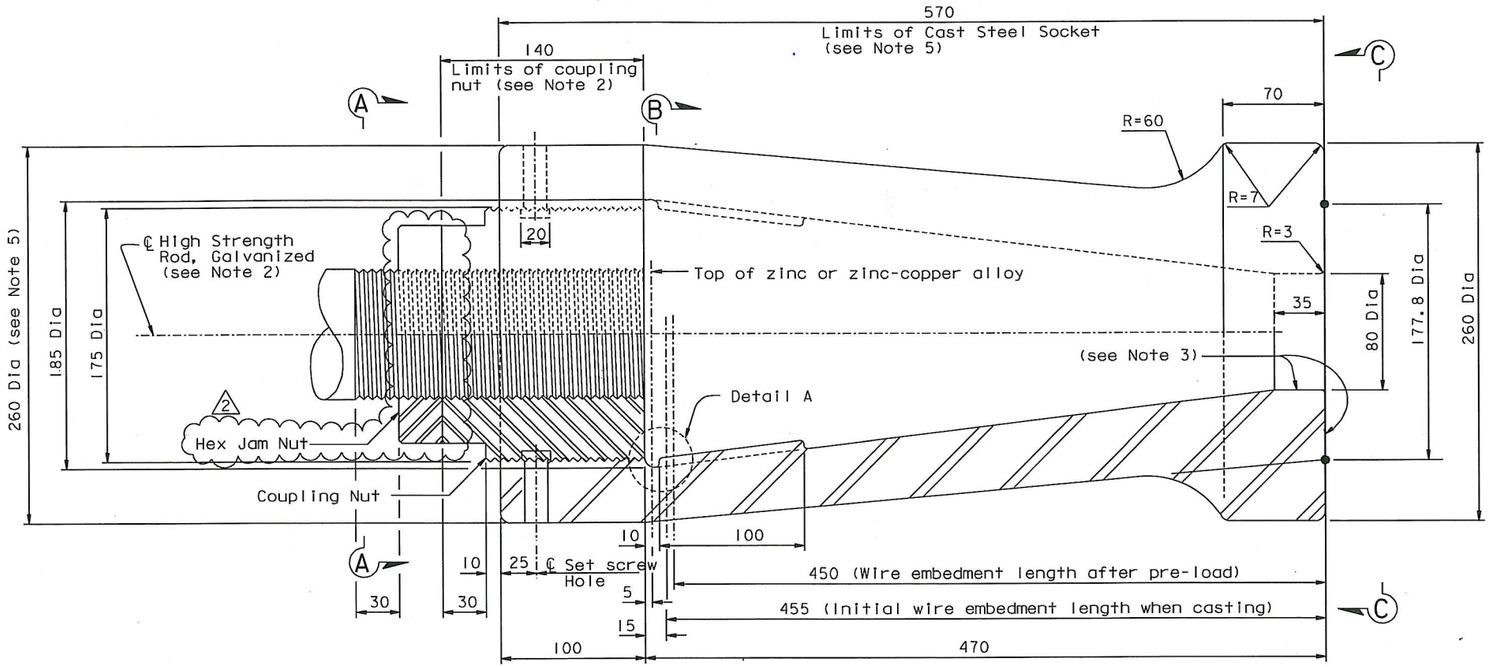

SOCKET DETAIL
1:2

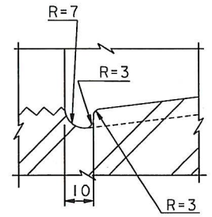

DETAIL A
1:1

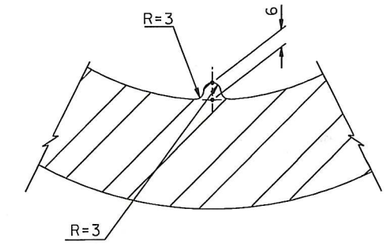

DETAIL B
1:1

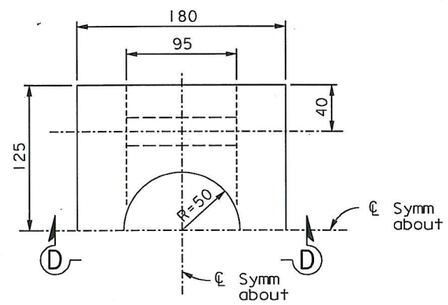

PLAN

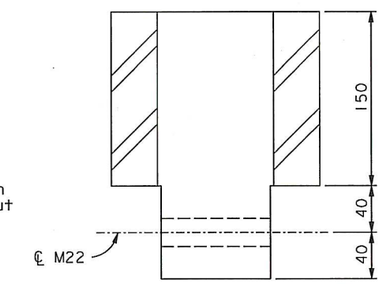

SECTION D-D

BEARING BLOCK DETAIL (See Note 6)
1:2.5

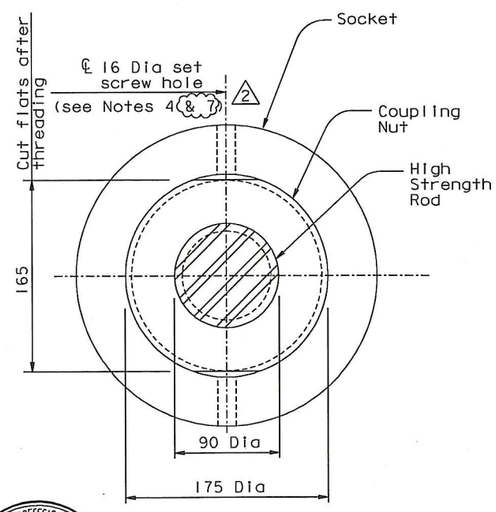

VIEW A-A
1:2.5

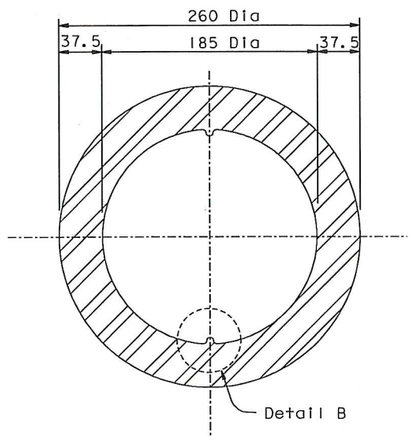

SECTION B-B
1:2.5

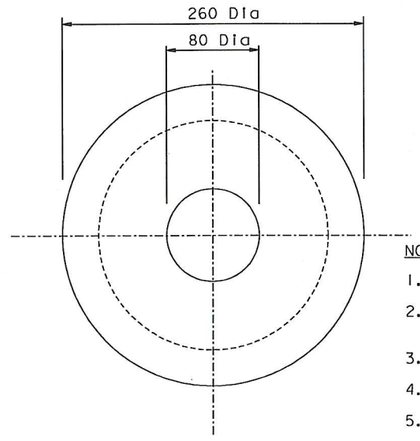

VIEW C-C
1:2.5

NOTES:

1. Coupling nut and socket shall conform to ASTM A194 GR 7, with 4 threads per inch.
2. For main cable strand anchor rod and cable strand socket materials, see "General Notes" sheets.
3. Surface shall be finished to ANSI 500.
4. Provide 16 Dia stainless set screws in threaded hole.
5. All socket dimensions are for information only. The Contractor shall develop socket details consistent with his means and methods and the east cable anchorage geometry, and shall submit them to the Engineer for review and approval. The socket dimensions shall be such that adequate prestressing and erection clearance is provided.
6. Material for bearing blocks shall be ASTM A668 Grade F, or ASTM A148 Grade 550-345.
7. Thread locking compound shall be used to secure the coupling nut set screws. (2)

Daniel J. Turner
REGISTERED PROFESSIONAL ENGINEER Daniel J. Turner No. C 65033 Exp. 06/30/11 CIVIL STATE OF CALIFORNIA

FOR REVISIONS ONLY

CONTRACT CHANGE ORDER NO. 37S01
SHEET 7 OF 11

REQUESTS FOR INFORMATION NOT ADDRESSED IN THIS CCO REMAIN IN FORCE

ALL DIMENSIONS ARE IN MILLIMETERS UNLESS OTHERWISE SHOWN

MARK	DATE	DESCRIPTIONS	BY	CH'D	CCO#
2	02/18/11	MISCELLANEOUS CABLE SYSTEM DETAILS	DT	GB	37SI
1	08/28/09	BEARING BLOCKS	DT	GB	78

REVISIONS

R. Vallizadeh/V. Toan/Y.L./W.L./F.C.
DESIGN OVERSIGHT
Roya Vallizadeh / Vang Toan / Y. Liu
SIGN OFF DATE 02/18/11

DESIGN BY G. Baker CHECKED J. Kulikl
DETAILS BY M. Gulyas CHECKED T. McMeans
QUANTITIES BY M. Gulyas CHECKED M. Roberts

PREPARED FOR THE STATE OF CALIFORNIA DEPARTMENT OF TRANSPORTATION

R. Manzanarez
PROJECT ENGINEER

BRIDGE NO. 34-0006L/R
KILOMETER POST 13.2/13.9

SAN FRANCISCO OAKLAND BAY BRIDGE
EAST SPAN SEISMIC SAFETY PROJECT
SELF-ANCHORED SUSPENSION BRIDGE
(SUPERSTRUCTURE & TOWER)

EAST CABLE ANCHORAGE DETAILS

Rev. Date: 5-18-98

ORIGINAL SCALE IN MILLIMETERS FOR REDUCED PLANS 0 10 20 30 40 50 60 70 80 90 100

CU 04
EA 0120F1

DISREGARD PRINTS BEARING EARLIER REVISION DATES

REVISION DATES (PRELIMINARY STAGE ONLY) 08/02/99 05/31/01 04/08/02 07/01/02 12/19/02

SHEET 320R2 OF

FILE => L:\BB\04-012001\SAS\Contract Plans and CCO\CCO\CCO#37SI\1-Update 02-18-11\DGN\agand08a.dgn

100 % PS&E

USERNAME => DWinrow DATE PLOTTED => 18 FEB 2011 TIME PLOTTED => 11:10:35

DIST.	COUNTY	ROUTE	KILOMETER POST TOTAL PROJECT	SHEET NO.	TOTAL SHEETS
04	SF	80	13.2/13.9	744R3	1204

George Baker
REGISTERED ENGINEER - CIVIL

1-27-03
PLANS APPROVAL DATE

REGISTERED PROFESSIONAL ENGINEER George S. Baker No. C 57112 Exp. 12/31/05 CIVIL STATE OF CALIFORNIA

The State of California or its officers or agents shall not be responsible for the accuracy or completeness of electronic copies of this plan sheet.

T.Y. LIN / MOFFATT & NICHOL
825 BATTERY STREET
SAN FRANCISCO, CA 94111

Caltrans now has a web site! To get to the web site, go to: http://www.dot.ca.gov

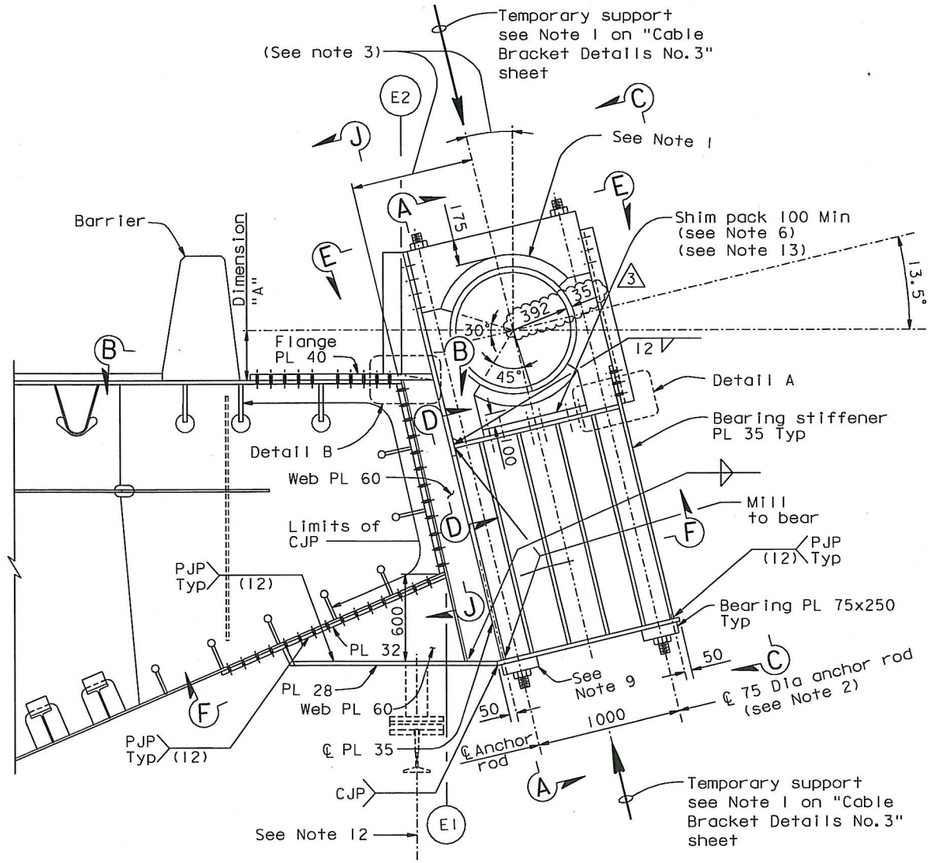

ELEVATION

CABLE BRACKET AT PP 112, 114 AND 116

1:20 (PP 110 similar) (See Note 14)

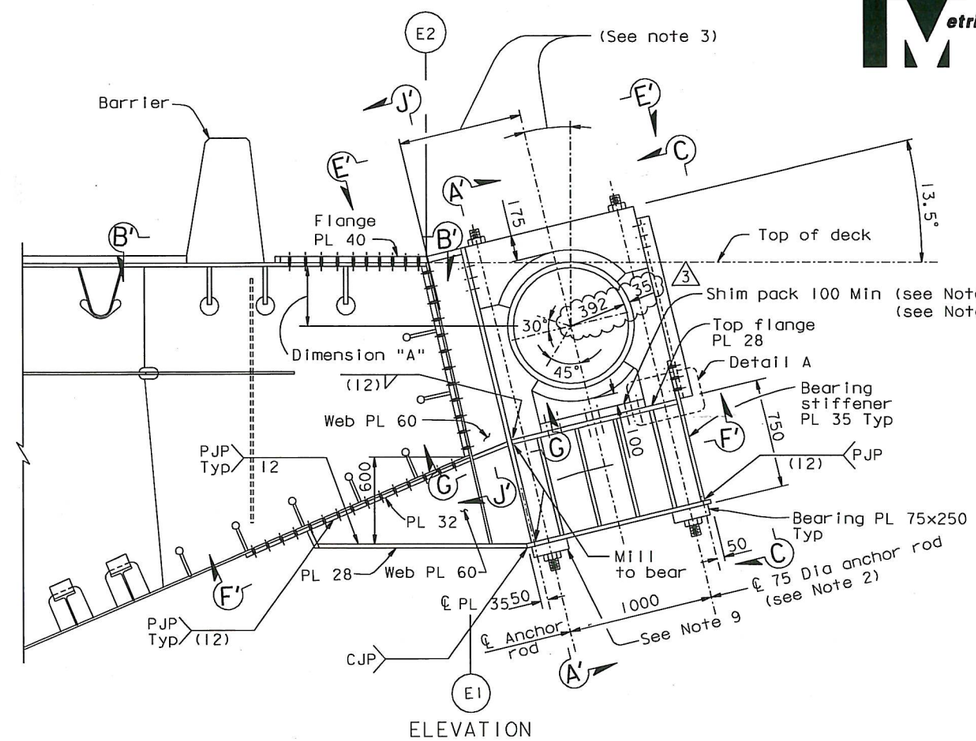

ELEVATION

ALTERNATIVE CABLE BRACKET (See Note 4)

1:20

PANEL POINT	DIMENSION "A" (SEE NOTE 3)	
	NORTH CABLE	SOUTH CABLE
110	960	1075 Above deck
112	545 Above deck	630 Above deck
114	240 Above deck	300 Above deck
116	0.0	0.0
ALTERNATIVE	BELOW DECK	BELOW DECK

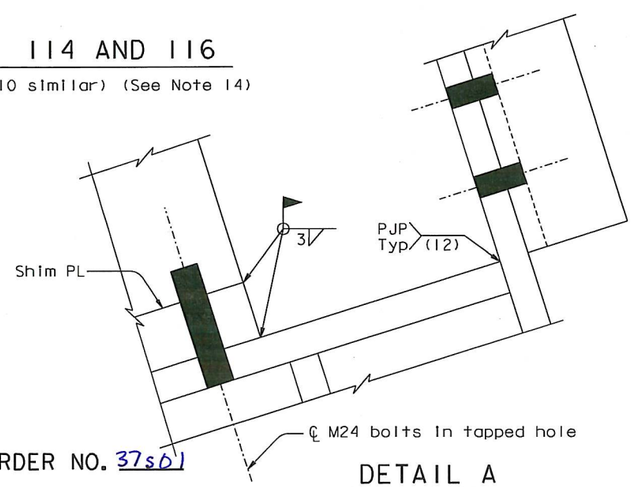

DETAIL A

1:2.5

NOTES:

1. For details of elastomeric bearing see "Cable Band Details No.5" sheet.
2. For anchor rod material, see "General Notes" sheet.
3. The Contractor shall compute dimension "A" for construction using the cable profile of his Erection Plan. All permanent components shall be fabricated to fit the computed cable profile.
4. If Contractor's actual cable center lies below top of deck the alternative bracket may be used.
5. At PP114 and PP116 the brackets should be located so as to apply no load to the cable at the completion of construction.
6. The Contractor shall allow for the compression of the elastomeric bearing due to the permanent anchor rods in his fabrication and shimming. See "Cable Bracket Details No.3" sheet.
7. For "Cable Bracket Details" sheets all bolts shall be detailed according to the "Bolt Dimension Table". See "Typical Girder Details No.1" sheet. All bolts are HS, unless noted otherwise.
8. For "Cable Bracket Details" sheets, unless noted otherwise all fillet welds shall be 6 mm for plate sizes not greater than 20 mm. For plates greater than 20 mm, fillet welds shall be 8 mm, unless noted otherwise.
9. At PP116 rod bearing interferes with traveler rails. For alternative rpd bearing, see Detail C on "Cable Bracket Details No.2" sheet.
10. For Sections A-A, A'-A', B-B, B'-B', C-C, D-D and Detail B, see "Cable Bracket Details No.2" sheet.
11. For Views E-E, E'-E', Sections F-F, F'-F', G-G, J-J and J'-J', see "Cable Bracket Details No.3" sheet.
12. For location and details of traveler rail support, see "Traveler Rail Details" sheets.
13. Shim plate thickness shall be 10 mm each.
14. The Contractor shall provide shop drawings for two cable brackets and for two suspender brackets at PP 110 ("E" line and "W" line). The Contractor shall fabricate and install either a cable bracket or a suspender bracket at PP 110 ("E" line and "W" line) as directed by the Engineer. For suspender bracket details see "Suspender Bracket Details" sheets.

REGISTERED PROFESSIONAL ENGINEER Marwan N. Nader No. C 054426 Exp. 12/31/11 CIVIL STATE OF CALIFORNIA

FOR REVISIONS ONLY

CONTRACT CHANGE ORDER NO. 37S01
SHEET 8 OF 11

REQUESTS FOR INFORMATION NOT ADDRESSED IN THIS CCO REMAIN IN FORCE

MARK	DATE	DESCRIPTIONS	BY	CH'D	CCO#
3	01/28/11	MISCELLANEOUS CABLE SYSTEM DETAILS	GB	MN	37S1
2	12/18/09	SUSPENDER BRACKETS	GB	MN	104
1	02/20/09	SUSPENDER BRACKETS	GB	MN	104

REVISIONS

R. Vallizadeh/V. Toan/Y.L./W.L./F.C.
DESIGN OVERSIGHT
SIGN OFF DATE 01/28/11

DESIGN	BY G. Baker	CHECKED	T. McMeans
DETAILS	BY S. Camo	CHECKED	T. McMeans
QUANTITIES	BY D. Turner	CHECKED	C. Mibelli

PREPARED FOR THE STATE OF CALIFORNIA DEPARTMENT OF TRANSPORTATION

R. Manzanarez
PROJECT ENGINEER

BRIDGE NO. 34-0006L/R
KILOMETER POST 13.2/13.9

ALL DIMENSIONS ARE IN MILLIMETERS UNLESS OTHERWISE SHOWN

SAN FRANCISCO OAKLAND BAY BRIDGE
EAST SPAN SEISMIC SAFETY PROJECT
SELF-ANCHORED SUSPENSION BRIDGE
(SUPERSTRUCTURE & TOWER)

CABLE BRACKET DETAILS NO. 1

Rev. Date: 5-18-98

ORIGINAL SCALE IN MILLIMETERS FOR REDUCED PLANS 0 10 20 30 40 50 60 70 80 90 100

CU 04
EA 0120F1

DISREGARD PRINTS BEARING EARLIER REVISION DATES

REVISION DATES (PRELIMINARY STAGE ONLY) 08/07/99 05/31/01 04/08/02 07/24/02 12/13/02

SHEET 327R3 OF

FILE => I:\bb\04-012001\sas\contract plans and cco\cco\cco#37s1\1-original 01-28-11\dgn\agcbr01.dgn

USERNAME => arivera DATE PLOTTED => 27 JAN 2011 TIME PLOTTED => 15:57:02

100 % PS&E

DIST.	COUNTY	ROUTE	KILOMETER POST TOTAL PROJECT	SHEET NO.	TOTAL SHEETS
04	SF	80	13.2/13.9	751R2	1204

George Baker
REGISTERED ENGINEER - CIVIL

12-6-04
PLANS APPROVAL DATE

The State of California or its officers or agents shall not be responsible for the accuracy or completeness of electronic copies of this plan sheet.

REGISTERED PROFESSIONAL ENGINEER George S. Baker No. C 57112 Exp. 12/31/05 CIVIL STATE OF CALIFORNIA

T.Y. LIN / MOFFATT & NICHOL
825 BATTERY STREET
SAN FRANCISCO, CA 94111

Caltrans now has a web site! To get to the web site, go to: http://www.dot.ca.gov

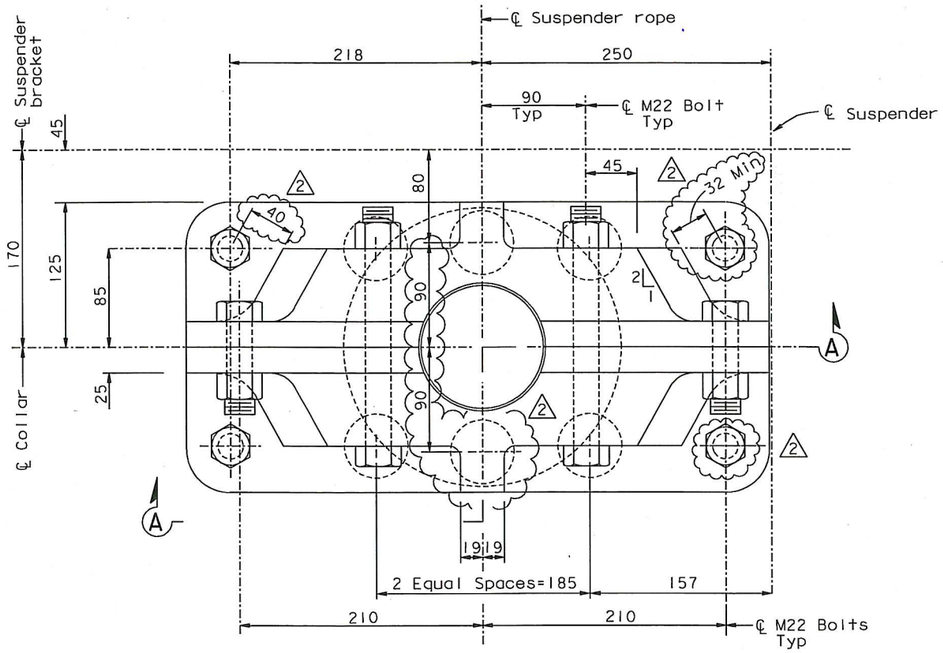

PLAN

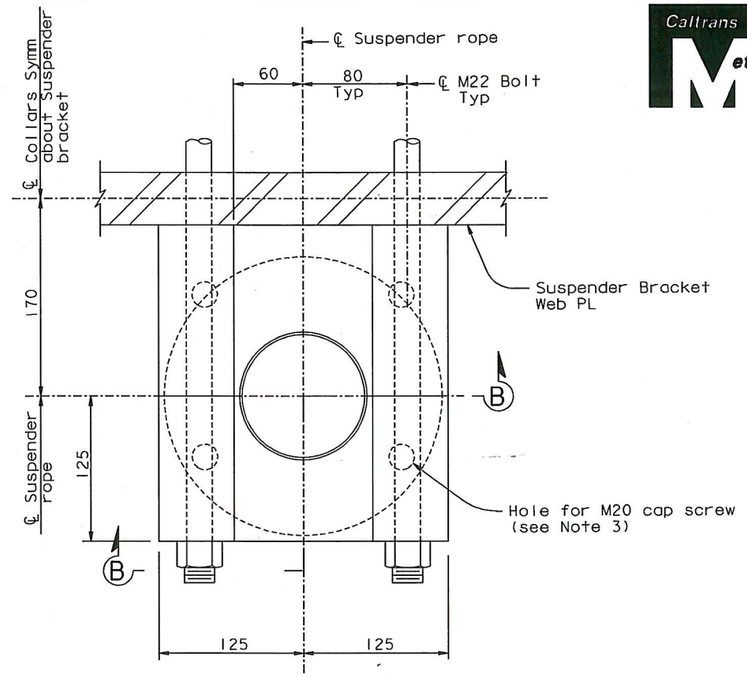

PLAN

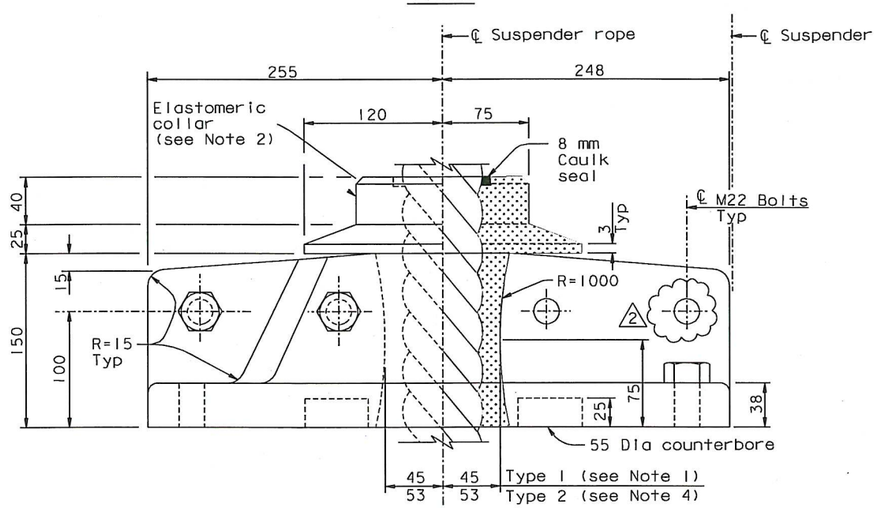

ELEVATION A-A

SPLIT COLLAR DETAIL

1:2.5

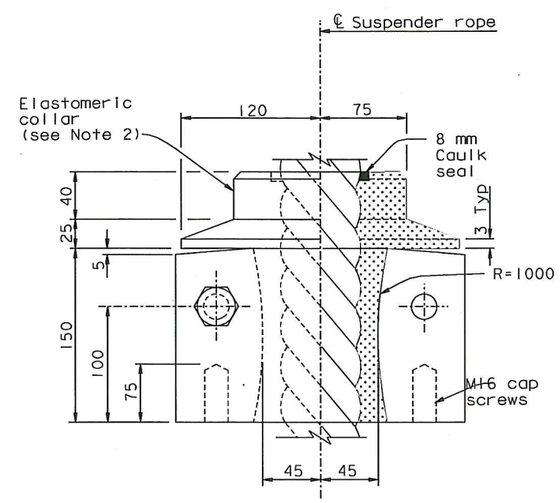

ELEVATION B-B

SPLIT COLLAR DETAIL

AT PANEL POINTS 104 TO 110
1:2.5

LEGEND:

Elastomeric collar in section

NOTES:

1. For location of suspender types, see "Suspender Layout No. 1" sheet.
2. Elastomeric collars shall be polyurethane, durometer 60, molded to fit suspender ropes.
3. Holes shall match those of seat plate detail, see "Suspender Bracket No. 6" sheet.
4. Collar dimension shown is for a 90 mm suspender rope size. If larger rope size is used, the dimension shall be equal to the rope radius plus 8 mm.

REGISTERED PROFESSIONAL ENGINEER Daniel J. Turner No. C 65033 Exp. 06/30/11 CIVIL STATE OF CALIFORNIA

FOR REVISIONS ONLY

CONTRACT CHANGE ORDER NO. 37S01
SHEET 9 OF 11

REQUESTS FOR INFORMATION NOT ADDRESSED IN THIS CCO REMAIN IN FORCE

ALL DIMENSIONS ARE IN MILLIMETERS UNLESS OTHERWISE SHOWN

100 % PS&E

SAN FRANCISCO OAKLAND BAY BRIDGE
EAST SPAN SEISMIC SAFETY PROJECT
SELF-ANCHORED SUSPENSION BRIDGE
(SUPERSTRUCTURE & TOWER)

SUSPENDER BRACKET DETAILS NO. 5

R. Valizadeh/V. Toan/Y.L./W.L./F.C.
DESIGN OVERSIGHT
SIGN OFF DATE 02/18/11

MARK	DATE	DESCRIPTIONS	BY	CH'D	CCO#
2	02/18/11	MISCELLANEOUS CABLE SYSTEM DETAILS	GB	DT	37S1
1	04/16/07	CABLE SYSTEM	GB	DT	37

REVISIONS

	BY	CHECKED
DESIGN	G. Baker	T. McMeans
DETAILS	S. Camo	P. Ritchie
QUANTITIES	C. Mauch	C. Mibelli

PREPARED FOR THE STATE OF CALIFORNIA DEPARTMENT OF TRANSPORTATION

R. Manzanarez
PROJECT ENGINEER

BRIDGE NO. 34-0006L/R
KILOMETER POST 13.2/13.9

Rev. Date: 5-18-98

ORIGINAL SCALE IN MILLIMETERS FOR REDUCED PLANS 0 10 20 30 40 50 60 70 80 90 100

CU 04
EA 0120F1

DISREGARD PRINTS BEARING EARLIER REVISION DATES

REVISION DATES (PRELIMINARY STAGE ONLY) 05/15/99 08/02/99 05/31/01 04/26/02 07/01/02 12/19/02

SHEET 334R2 OF

FILE => I:\bb\04-012001\sas\contract plans and cco\cco\cco#37s1\1-update 02-18-11\dgn\agsad12b.dgn

USERNAME => DWinrow DATE PLOTTED => 18 FEB 2011 TIME PLOTTED => 11:12:10

DIST.	COUNTY	ROUTE	KILOMETER POST TOTAL PROJECT	SHEET NO.	TOTAL SHEETS
04	SF	80	13.2/13.9	761R1	1204

George Baker
REGISTERED ENGINEER - CIVIL
12-6-04
PLANS APPROVAL DATE

REGISTERED PROFESSIONAL ENGINEER George S. Baker No. C 57112 Exp. 12/31/05 CIVIL STATE OF CALIFORNIA

The State of California or its officers or agents shall not be responsible for the accuracy or completeness of electronic copies of this plan sheet.

T.Y. LIN / MOFFATT & NICHOL
825 BATTERY STREET
SAN FRANCISCO, CA 94111

Caltrans now has a web site! To get to the web site, go to: http://www.dot.ca.gov

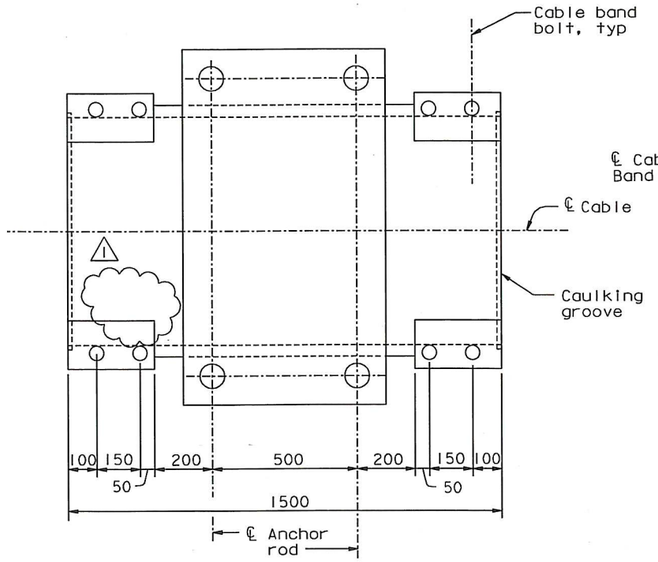

PLAN VIEW
(View parallel to the Cable Plane)

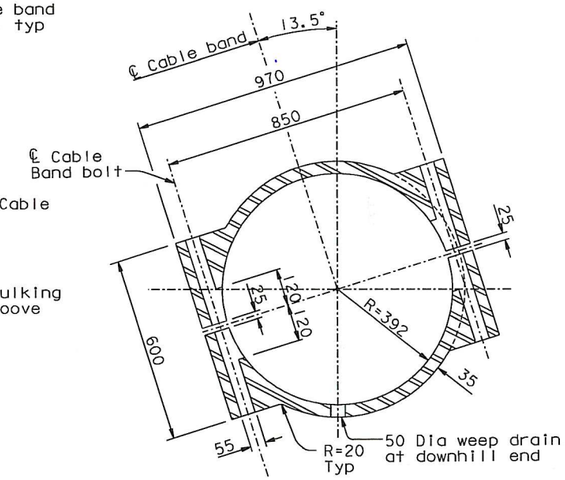

SECTION A-A
1:10

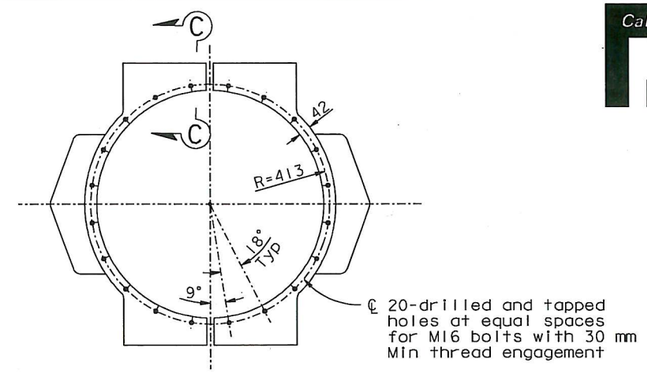

VIEW D-D FOR B11, B13 AND B15
1:10

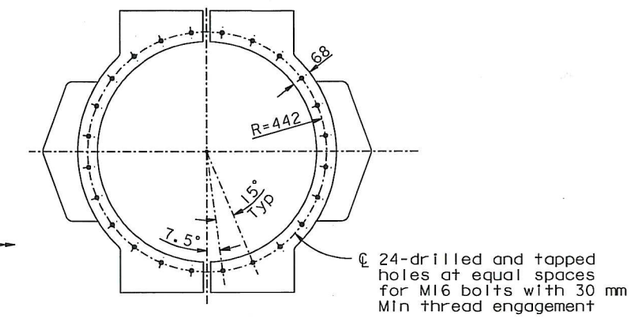

VIEW D-D FOR B16 ONLY
1:10

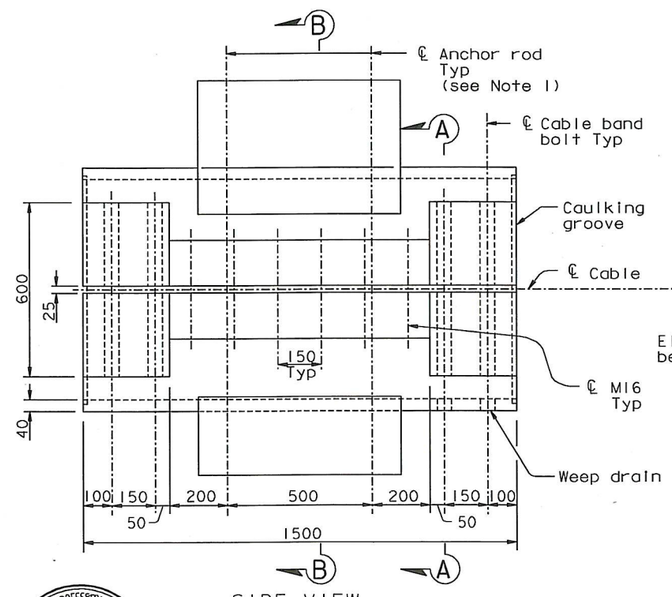

SIDE VIEW
(View perpendicular to the Cable Plane)

BAND TYPE B14
1:10

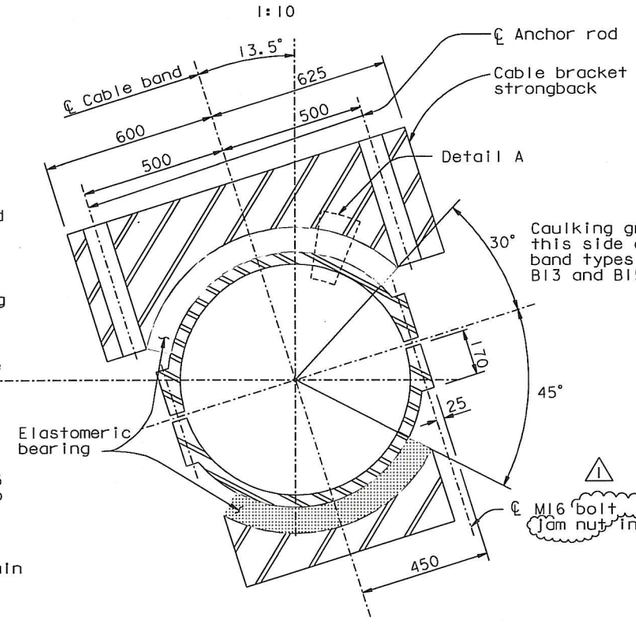

SECTION B-B

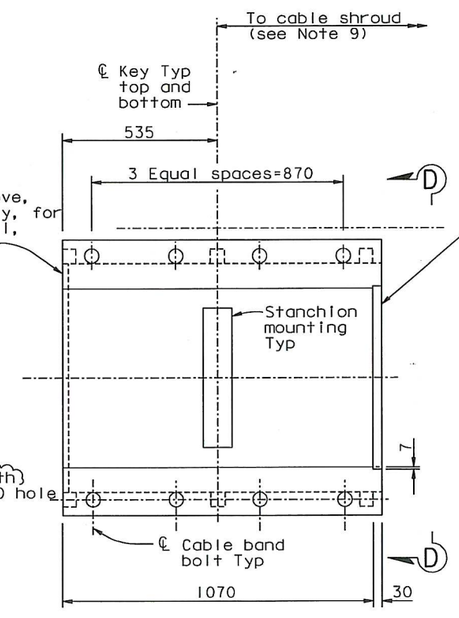

ELEVATION VIEW

BAND TYPE B15, B16 SIMILAR
1:10

NOTES:

1. For anchor rod details, see "Cable Bracket Details No. 1" sheet.
2. For Detail A and Section C-C, see "Cable Band Details No. 5" sheet.
3. For typical details not shown, see "Cable Band Details No. 3" sheet.
4. For caulking groove details, see "Cable Band Details No. 5" sheet.
5. For machined surfaces of cable bands, see "Cable Band Details No. 3" sheet.
6. Surfaces in contact with elastomeric bearings shall be geometrically true within ±1 mm. Surface roughness shall be finished to ANSI 1000.
7. Bolt bearing surface roughness shall be finished to ANSI 500.
8. Extension for Cable Shroud shall be part of cable band casting. For B16 only, both ends shall have Cable Shroud extensions.
9. For Cable Shrouds, see "West Cable Shroud Details", "Tower Cable Shroud Details" and "East Cable Shroud Details" sheets.

REGISTERED PROFESSIONAL ENGINEER Marwan N. Nader No. C 054426 Exp. 12/31/11 CIVIL STATE OF CALIFORNIA

FOR REVISIONS ONLY

CONTRACT CHANGE ORDER NO. 37S01
SHEET 10 OF 11

REQUESTS FOR INFORMATION NOT ADDRESSED IN THIS CCO REMAIN IN FORCE

ALL DIMENSIONS ARE IN MILLIMETERS UNLESS OTHERWISE SHOWN

R. Valizadeh/V. Toan/Y.L./W.L./F.C.
DESIGN OVERSIGHT
SIGN OFF DATE 02/18/11

MARK	DATE	DESCRIPTIONS	BY	CH'D	CCO#
1	02/18/11	MISCELLANEOUS CABLE SYSTEM DETAILS	GB	MN	37S1

REVISIONS

DESIGN	BY G. Baker	CHECKED T. McMeans	
DETAILS	BY S. Camo	CHECKED P. Ritchie	
QUANTITIES	BY C. Mauch	CHECKED C. Mibelli	

PREPARED FOR THE STATE OF CALIFORNIA DEPARTMENT OF TRANSPORTATION

R. Manzanarez
PROJECT ENGINEER

BRIDGE NO. 34-0006L/R
KILOMETER POST 13.2/13.9

SAN FRANCISCO OAKLAND BAY BRIDGE
EAST SPAN SEISMIC SAFETY PROJECT
SELF-ANCHORED SUSPENSION BRIDGE
(SUPERSTRUCTURE & TOWER)

CABLE BAND DETAILS NO. 4

Rev. Date: 5-18-98

ORIGINAL SCALE IN MILLIMETERS FOR REDUCED PLANS 0 10 20 30 40 50 60 70 80 90 100

CU 04
EA 0120F1

DISREGARD PRINTS BEARING EARLIER REVISION DATES

REVISION DATES (PRELIMINARY STAGE ONLY) 01/25/99 05/13/99 09/08/99 05/31/01 01/04/02 01/07/02 12/19/02

SHEET 344R1 OF

FILE => I:\bb\04-0120F1\sas\contract plans and cco\cco\cco#37s1\1-update 02-18-11\dgn\agcbd04.dgn

USERNAME => DWinrow DATE PLOTTED => 18 FEB 2011 TIME PLOTTED => 11:12:57

100 % PS&E

DIST.	COUNTY	ROUTE	KILOMETER POST TOTAL PROJECT	SHEET NO.	TOTAL SHEETS
04	SF	80	13.2/13.9	912R3	1204

Caltrans Metric

REGISTERED ENGINEER - CIVIL

12-6-04
PLANS APPROVAL DATE

REGISTERED PROFESSIONAL ENGINEER Tien Hung Ho No. C 43990 Exp. 06/30/11 CIVIL STATE OF CALIFORNIA

The State of California or its officers or agents shall not be responsible for the accuracy or completeness of electronic copies of this plan sheet.

T.Y. LIN / MOFFATT & NICHOL
825 BATTERY STREET
SAN FRANCISCO, CA 94111

Caltrans now has a web site! To get to the web site, go to: http://www.dot.ca.gov

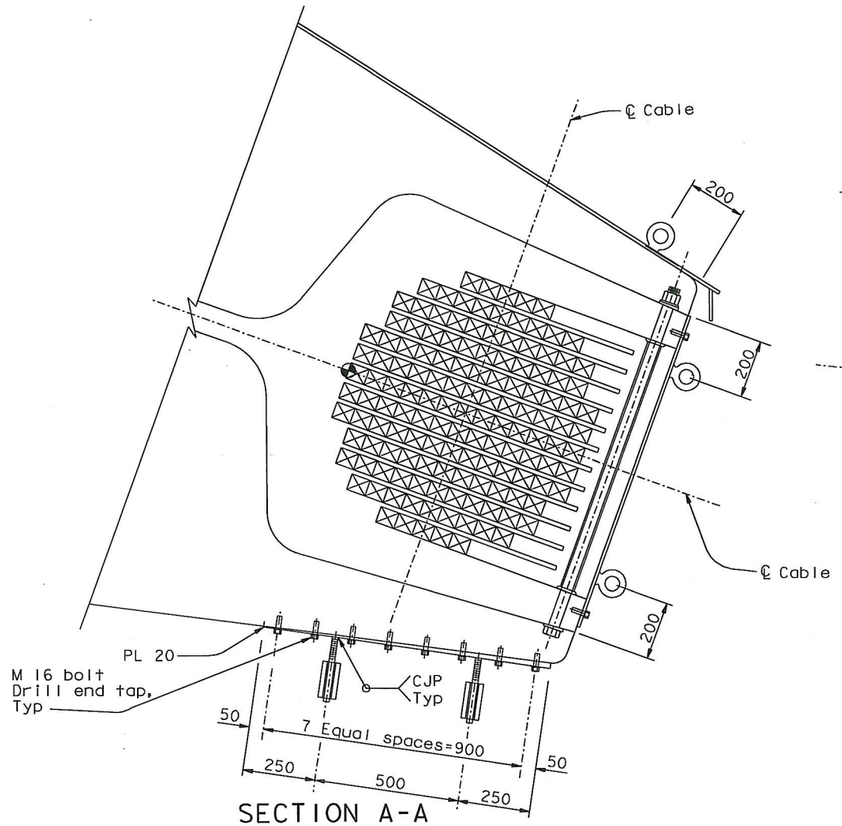

SECTION A-A
1:10

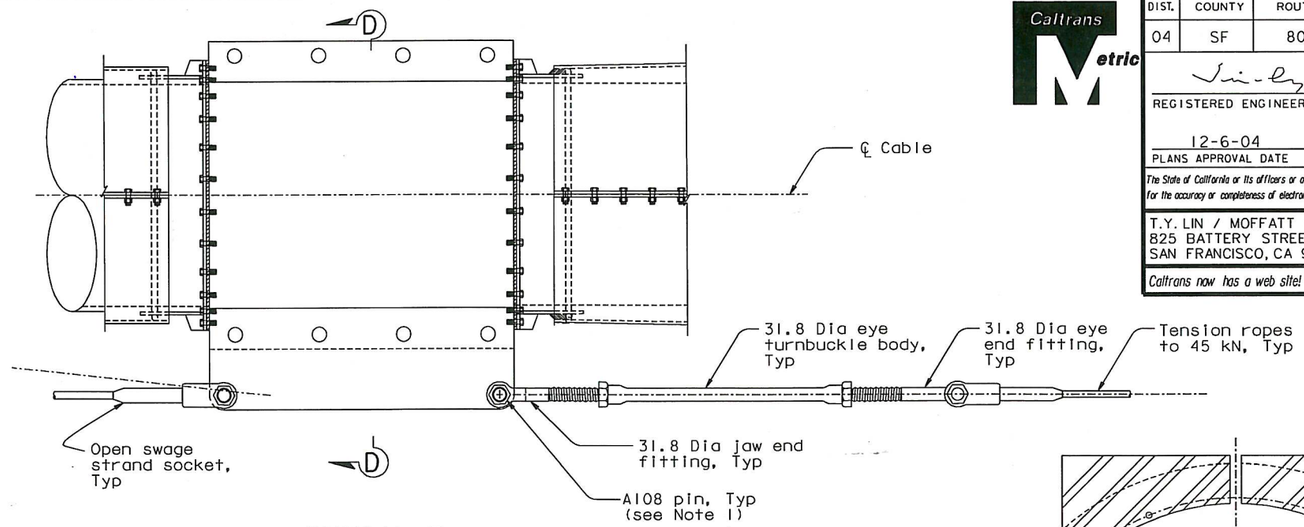

DETAIL D (Detail C similar)
1:10

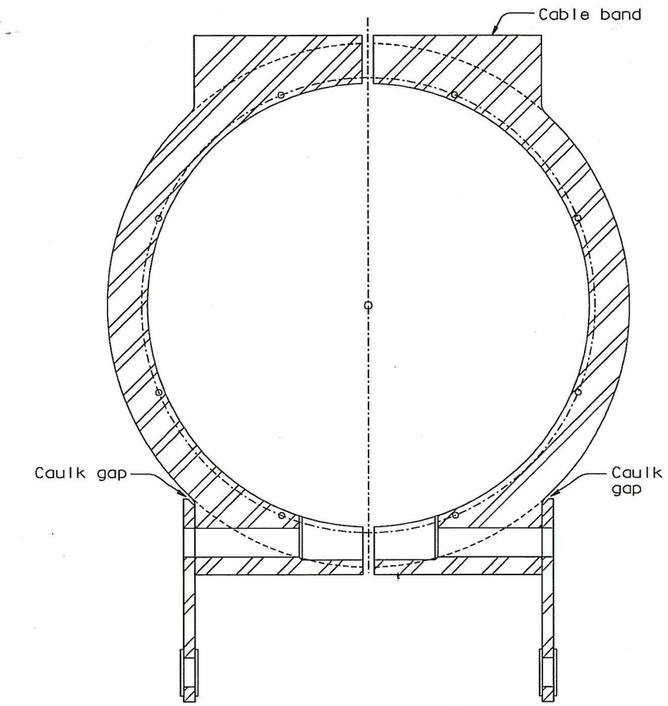

SECTION D-D
1:5

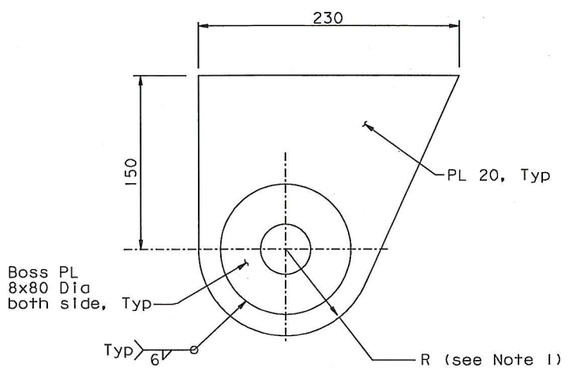

ANCHOR PLATE ASSEMBLY DETAIL
1:2.5

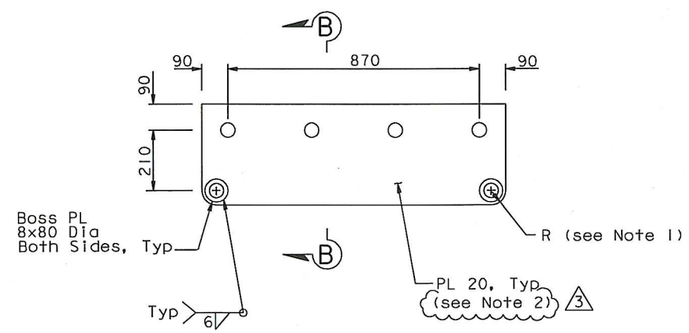

CABLE BAND PLATE ASSEMBLY DETAIL
1:10

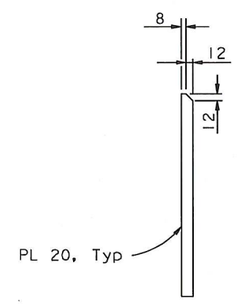

SECTION B-B
1:5

NOTES:

1. For pin details see "Cable Handrope Details No. 2" sheet.
2. (3) At the Contractor's option, 36 mm assembly plates without boss plates and with longer cable band bolts may be used in lieu of the detail shown, subject to review and approval of the Engineer.

CONTRACT CHANGE ORDER NO. 37s01
SHEET 11 OF 11

REQUESTS FOR INFORMATION NOT ADDRESSED IN THIS CCO REMAIN IN FORCE

MARK	DATE	DESCRIPTIONS	BY	CH'D	CCO#
3	02/18/11	MISCELLANEOUS CABLE SYSTEM DETAILS	TH	GB	37S1
2	06/22/07	WELDED PADEYES	NV	TH	41
1	04/20/07	WEST ANCHORAGE ACCESS DETAILS	GB	TH	28

REVISIONS

R. Vallizadeh/V. Toan/Y.L./W.L./F.C.
DESIGN OVERSIGHT
SIGN OFF DATE 02/18/11

Rev. Date: 5-18-98

	BY	CHECKED
DESIGN	T. Ho	N. Vo
DETAILS	J. Sun	N. Vo
QUANTITIES	T. Ho	N. Vo

PREPARED FOR THE STATE OF CALIFORNIA DEPARTMENT OF TRANSPORTATION

ALL DIMENSIONS ARE IN MILLIMETERS UNLESS OTHERWISE SHOWN

R. Manzanarez
PROJECT ENGINEER

BRIDGE NO. 34-0006L/R
KILOMETER POST 13.2/13.9

SAN FRANCISCO OAKLAND BAY BRIDGE
EAST SPAN SEISMIC SAFETY PROJECT
SELF-ANCHORED SUSPENSION BRIDGE
(SUPERSTRUCTURE & TOWER)

WEST ANCHORAGE ACCESS DETAILS NO. 3

ORIGINAL SCALE IN MILLIMETERS FOR REDUCED PLANS 0 10 20 30 40 50 60 70 80 90 100

CU 04
EA 0120F1

DISREGARD PRINTS BEARING EARLIER REVISION DATES

REVISION DATES (PRELIMINARY STAGE ONLY) 08/08/99 05/24/01 04/08/02 07/24/02 12/19/02 09/06/04

SHEET 495R3 OF

FILE => I:\bb\04-012001\sas\contract plans and cco\cco\cco#37s1\1-update 02-18-11\dgn\akacc02e.dgn

USERNAME => DWinrow DATE PLOTTED => 18 FEB 2011 TIME PLOTTED => 11:13:42

100 % PS&E