DIST.	COUNTY	ROUTE	KILOMETER POST TOTAL PROJECT	SHEET NO.	TOTAL SHEETS
04	SF	80	13.2/13.9	604R1	1204

Caltrans Metric

REGISTERED ENGINEER - CIVIL

12-6-04
PLANS APPROVAL DATE

REGISTERED PROFESSIONAL ENGINEER Marwan N. Nader No. C 054426 Exp. 12/31/09 CIVIL STATE OF CALIFORNIA

The State of California or its officers or agents shall not be responsible for the accuracy or completeness of electronic copies of this plan sheet.

T.Y. LIN / MOFFATT & NICHOL
825 BATTERY STREET
SAN FRANCISCO, CA 94111

Caltrans now has a web site! To get to the web site, go to: http://www.dot.ca.gov

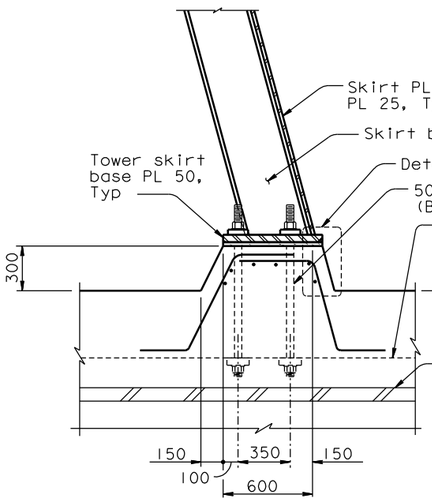

DETAIL F
1:20

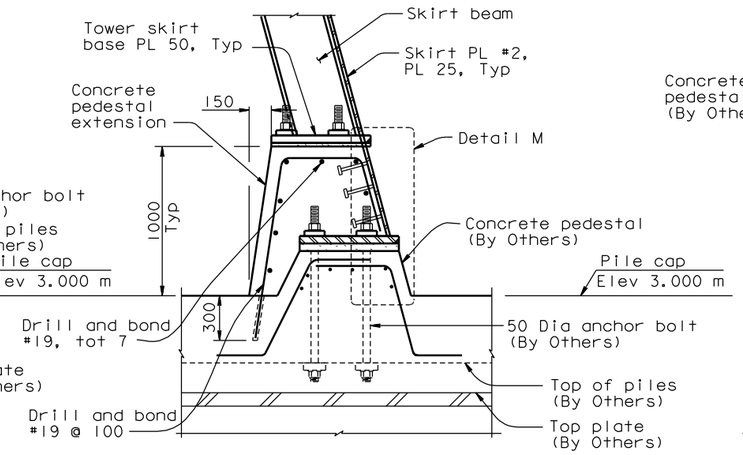

DETAIL G
1:20

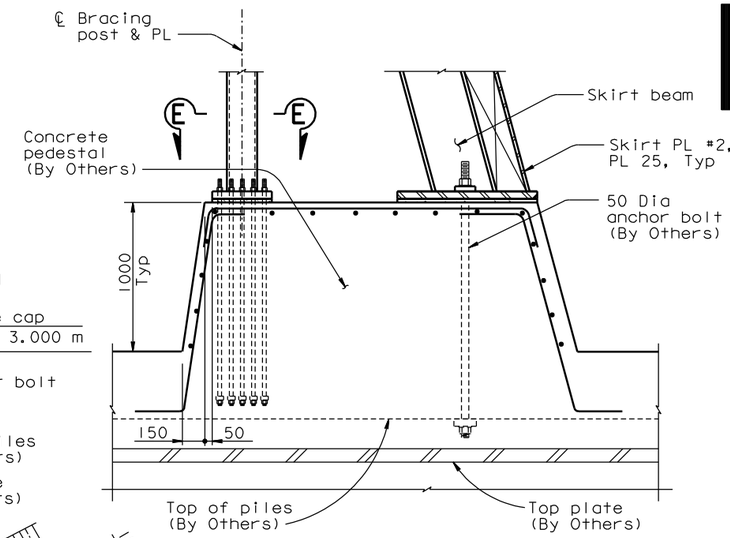

DETAIL H
1:20

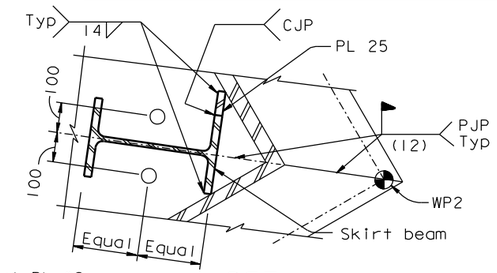

DETAIL L
1:10

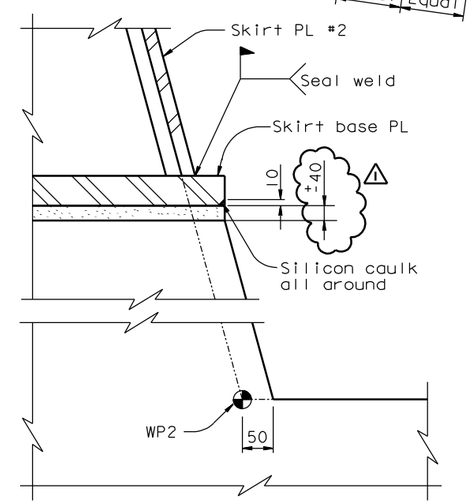

DETAIL M
1:2

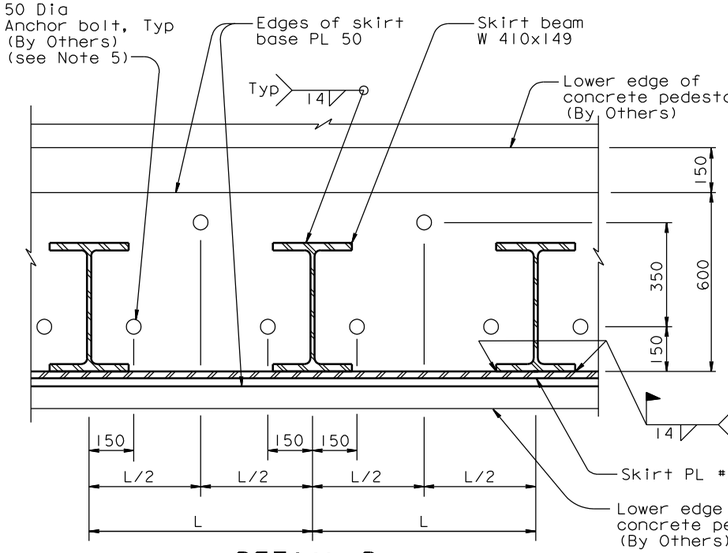

DETAIL D (TYPICAL)
1:10

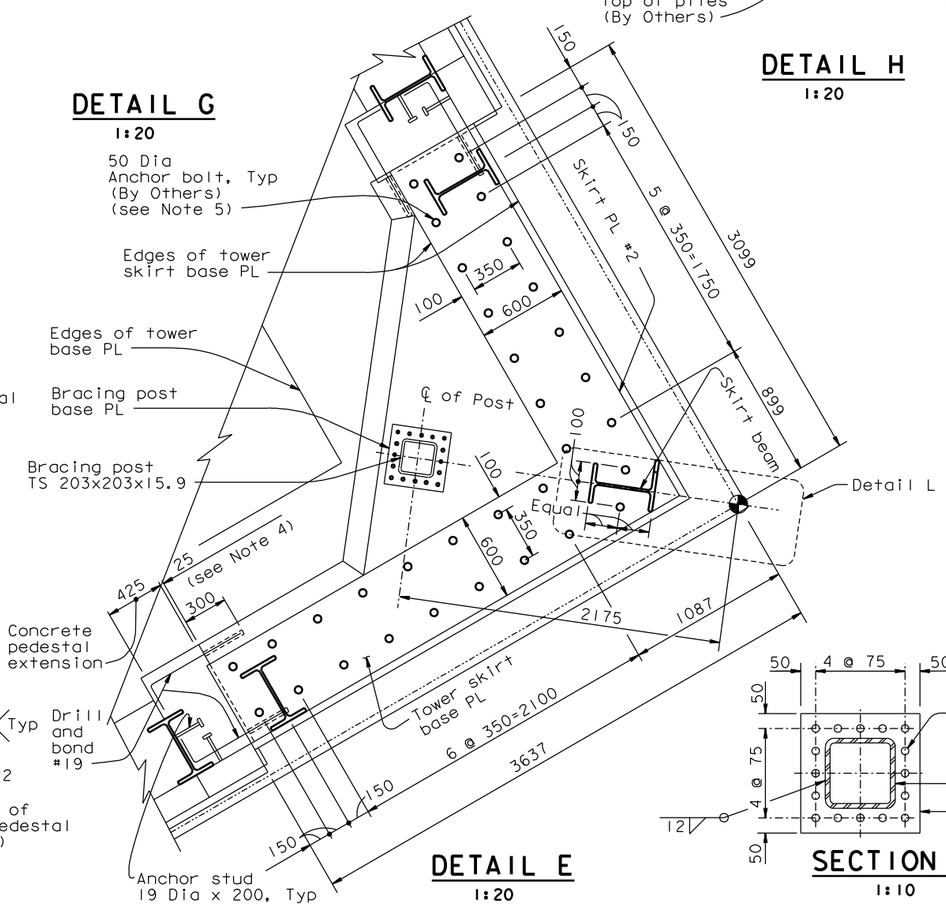

DETAIL E
1:20

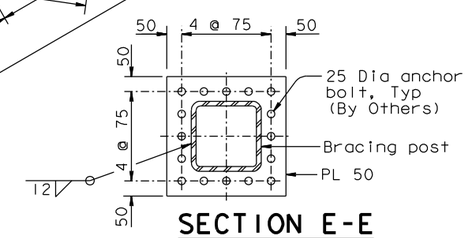

SECTION E-E
1:10

NOTES:

1. For tower anchorage details, see "Tower Anchorage Details" sheets.
2. Reinforcement is for information only, and by Others.
3. Tower skirt anchor bolts shall be pretensioned to 50% of their ultimate tensile strength. Tower skirt anchor bolts are A354 Gr. BC.
4. Remove existing cover concrete.
5. The Contractor shall field verify the locations of all anchor bolts before drilling holes in the skirt base plate.

ALL DIMENSIONS ARE IN MILLIMETERS UNLESS OTHERWISE SHOWN

REQUESTS FOR INFORMATION NOT ADDRESSED IN THIS CCO REMAIN IN FORCE

MARK	DATE	DESCRIPTIONS	BY	CH'D	CCO#
1	02/12/08	TOWER ANCHORAGE BASE PLATE GROUT	MN	NV	36S1

REVISIONS

CONTRACT CHANGE ORDER NO. ____
SHEET ____ OF ____

R. Valizadeh/V. Toan/Y.L./W.L./F.C.
DESIGN OVERSIGHT
Roya Valizadeh / Vong Toan / Y. Liu
SIGN OFF DATE 02/12/08

Rev. Date: 5-18-98

DESIGN	BY M. Nader	CHECKED G. Baker	
DETAILS	BY S. Hamoud	CHECKED G. Baker	
QUANTITIES	BY S. Hamoud	CHECKED Y. Zhang	

PREPARED FOR THE STATE OF CALIFORNIA DEPARTMENT OF TRANSPORTATION

R. Manzanarez
PROJECT ENGINEER

BRIDGE NO. 34-0006L/R
KILOMETER POST 13.2/13.9

CU 04
EA 0120F1

ORIGINAL SCALE IN MILLIMETERS FOR REDUCED PLANS 0 10 20 30 40 50 60 70 80 90 100

DISREGARD PRINTS BEARING EARLIER REVISION DATES

REVISION DATES (PRELIMINARY STAGE ONLY): 08/08/99 05/31/01 04/08/02 07/01/02 12/19/02

SHEET 187R1 OF

SAN FRANCISCO OAKLAND BAY BRIDGE
EAST SPAN SEISMIC SAFETY PROJECT
SELF-ANCHORED SUSPENSION BRIDGE
(SUPERSTRUCTURE & TOWER)

TOWER SKIRT DETAILS NO. 4

FILE => I:\bb\04-0120I\sas\contract plans and cco\cco\in progress\cco#36s1\dgn\aeped04.dgn

USERNAME => vignatovs DATE PLOTTED => 22 FEB 2008 TIME PLOTTED => 14:44:07

100% PS&E