DIST.	COUNTY	ROUTE	KILOMETER POST TOTAL PROJECT	SHEET NO.	TOTAL SHEETS
04	SF	80	13.2/13.9	599R3	1204

Caltrans Metric

REGISTERED ENGINEER - CIVIL

12-6-04
PLANS APPROVAL DATE

REGISTERED PROFESSIONAL ENGINEER Marwan N. Nader No. C 054426 Exp. 12/31/09 CIVIL STATE OF CALIFORNIA

The State of California or its officers or agents shall not be responsible for the accuracy or completeness of electronic copies of this plan sheet.

T.Y. LIN / MOFFATT & NICHOL
825 BATTERY STREET
SAN FRANCISCO, CA 94111

Caltrans now has a web site! To get to the web site, go to: http://www.dot.ca.gov

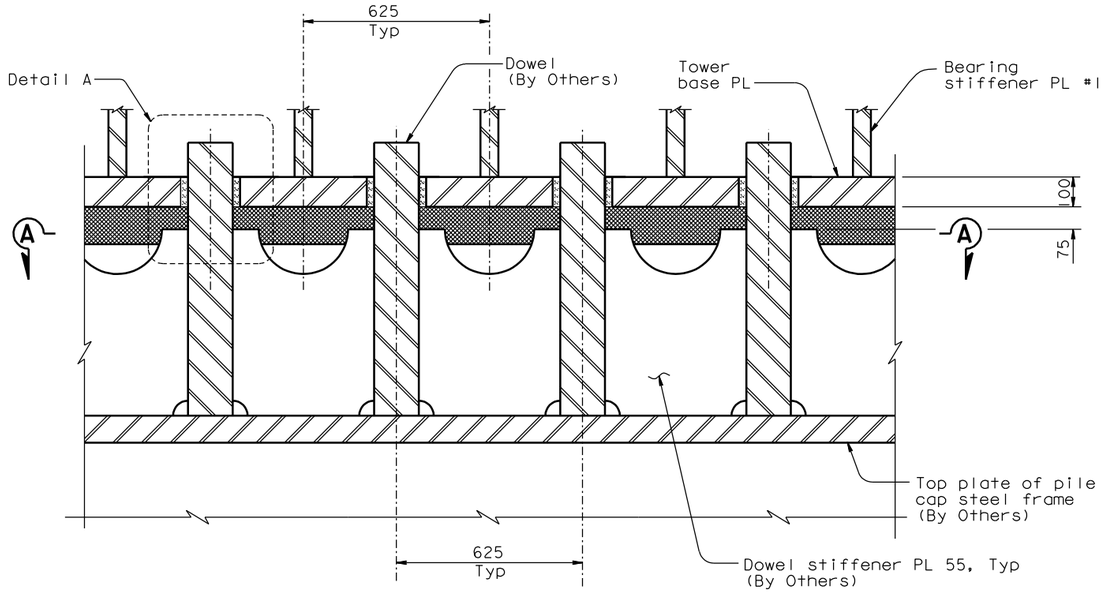

SECTION F-F

1:10

(Section at B shown, others are similar)

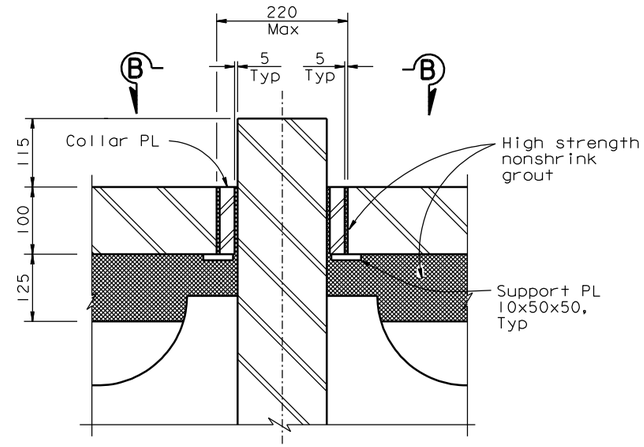

DOWEL ANCHORAGE CONTINGENCY DETAIL (see Note 2)

1:5

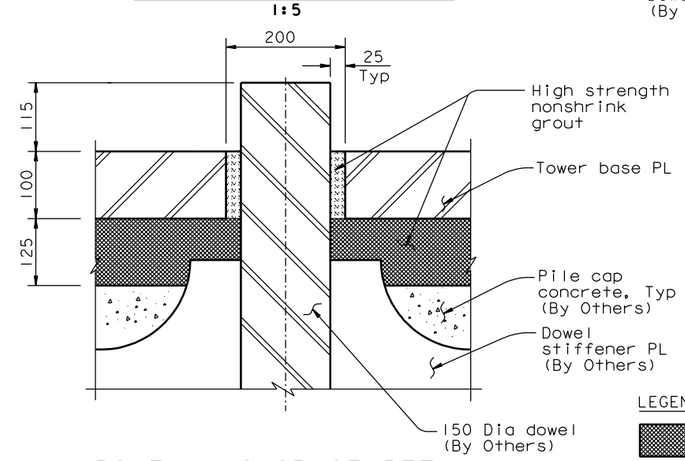

DOWEL ANCHORAGE DETAIL

DETAIL A (See Note 4)

1:5

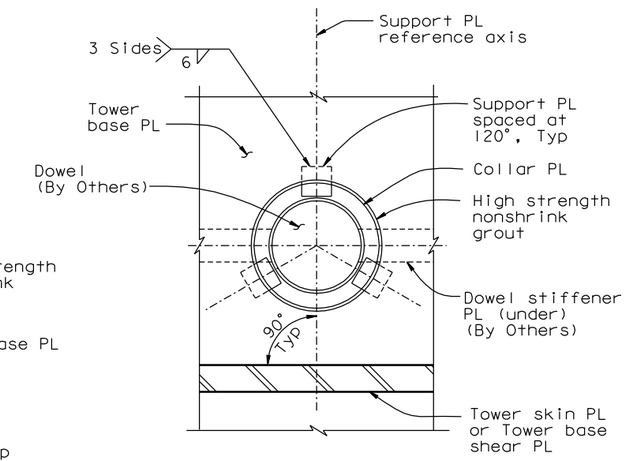

VIEW B-B

1:5

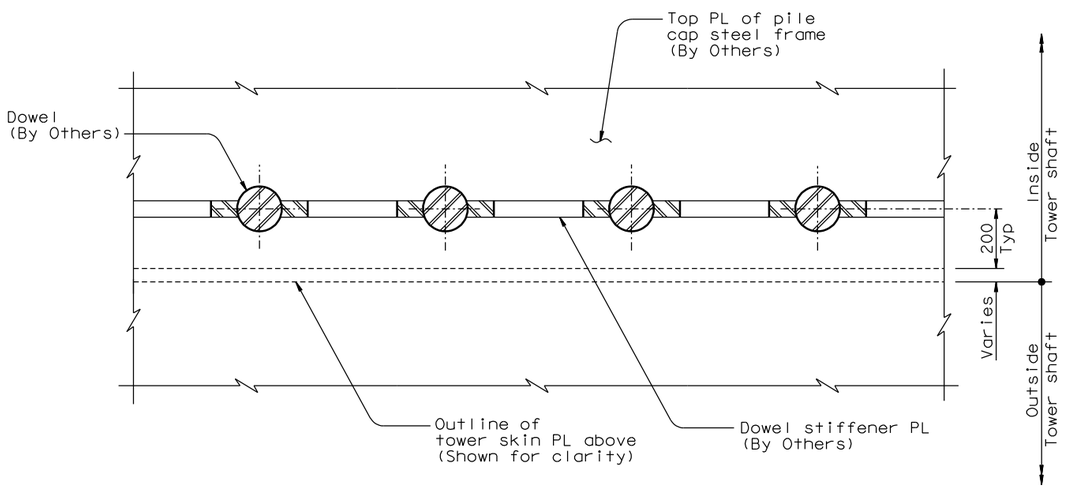

SECTION A-A

1:10

LEGEND:

3 High strength nonshrink grout (f'c=60 MPa)

3 High strength nonshrink grout (f'c=104 MPa) (see Note 3)

NOTES:

1. For dowel layout, see "Tower Anchorage Details No. 3" sheet.
2. Oversize hole in tower base PL is an acceptable alternative to accomodate tolerance requirements for the erection of the tower base plate. Collar plates shall be A709M Gr. 345 and shall be fabricated based on field measurements and then installed.
3. The Contractor shall recommend an epoxy grout based on manufacturer's recommendations, subject to review and approval of the Engineer.
4. The Contractor may submit alternate dowel anchorage details to suit his erection means and methods, subject to review and approval of the Engineer.

REQUESTS FOR INFORMATION NOT ADDRESSED IN THIS CCO REMAIN IN FORCE

MARK	DATE	DESCRIPTIONS	BY	CH'D	CCO#
3	08/29/08	TOWER ANCHORAGE BASE PLATE GROUT	JD	MN	36S1
2	04/03/07	TOWER BASE PLATE	JD	MN	36
1	02/28/07	TOWER BASE PLATE	JD	MN	36

REVISIONS

CONTRACT CHANGE ORDER NO. ____
SHEET ___ OF ___

ALL DIMENSIONS ARE IN MILLIMETERS UNLESS OTHERWISE SHOWN

SAN FRANCISCO OAKLAND BAY BRIDGE
EAST SPAN SEISMIC SAFETY PROJECT
SELF-ANCHORED SUSPENSION BRIDGE
(SUPERSTRUCTURE & TOWER)

TOWER ANCHORAGE DETAILS NO. 7

R. Valizadeh/V. Toan/Y.L./W.L./F.C.
DESIGN OVERSIGHT
Roya Valizadeh / Vona Toan / Y. Liu
SIGN OFF DATE 08/29/08

	BY	CHECKED
DESIGN	M. Nader	S. Camo
DETAILS	L. Rus	S. Camo
QUANTITIES	L. Rus	Y. Zhang

PREPARED FOR THE STATE OF CALIFORNIA DEPARTMENT OF TRANSPORTATION

R. Manzanarez
PROJECT ENGINEER

BRIDGE NO. 34-0006L/R
KILOMETER POST 13.2/13.9

Rev. Date: 5-18-98

ORIGINAL SCALE IN MILLIMETERS FOR REDUCED PLANS 0 10 20 30 40 50 60 70 80 90 100

CU 04
EA 0120F1

DISREGARD PRINTS BEARING EARLIER REVISION DATES

REVISION DATES (PRELIMINARY STAGE ONLY): 05/15/99 08/02/99 05/31/01 04/08/02 07/01/02 12/19/02

SHEET 182R3 OF

FILE => L:\BB\04-012001\SAS\Contract Plans and CCO\CCO\In Progress\CCO#36S1\Revised 8-29-08 OPTION A\DGN\aetwa05.dgn

USERNAME => dwinrow DATE PLOTTED => 12 SEP 2008 TIME PLOTTED => 08:50:31

100% PS&E