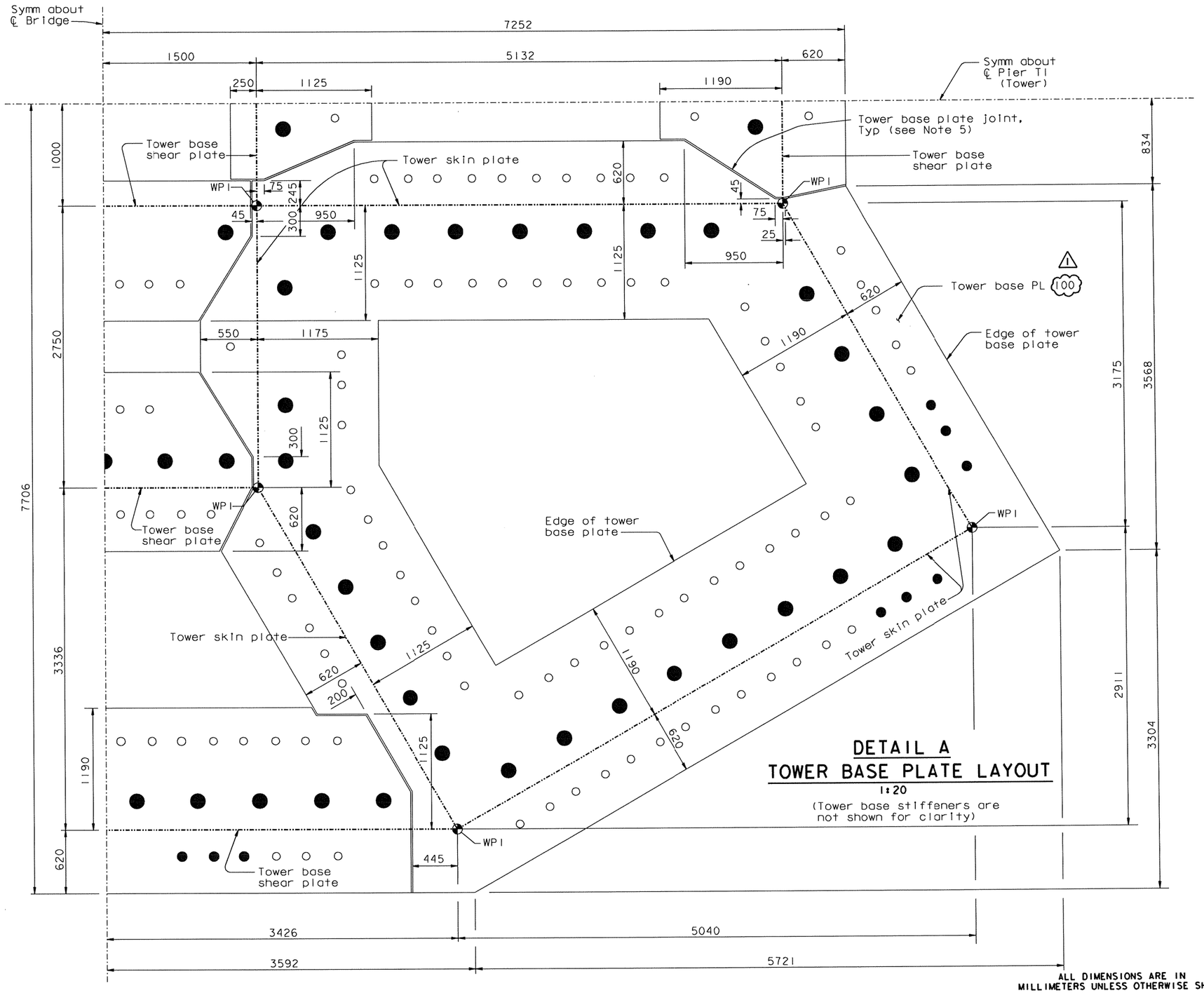

DETAIL A
TOWER BASE PLATE LAYOUT
1:20

(Tower base stiffeners are not shown for clarity)

LEGEND:

- Tower base plate outline
- Edges of tower skin & tower base shear plate outline
- 150 Dia dowel
- 75 Dia anchor bolt
- 100 Dia anchor bolt
- WP1 - Geometric working point @ Elev 3.125 m

MARK	DATE	DESCRIPTIONS	BY	CH'D	CCO#
1	02/28/07	TOWER BASE PLATE	AS	MN	36

REVISIONS

CONTRACT CHANGE ORDER NO. ____
SHEET ____ OF ____

NOTES:

1. For anchor bolts and dowels layout, see "Tower Anchorage Details No. 3" sheet.
2. For tower base stiffener layout, see "Tower Anchorage Details No. 4" sheet.
3. Tower anchorage WP are extrapolated using control cross sections WP shown in "Tower Layout No. 4" sheet. Tower anchorage WP are for information only, and shall not govern the control cross section WP.
4. For anchor bolt hole details, see "Tower Anchorage Details No. 6" sheet. For dowel hole detail, see "Tower Anchorage Details No. 7" sheet.
5. For details of tower base plate joint, see "Tower Anchorage Details No. 8" sheet.

ALL DIMENSIONS ARE IN MILLIMETERS UNLESS OTHERWISE SHOWN

DIST.	COUNTY	ROUTE	KILOMETER POST TOTAL PROJECT	SHEET NO.	TOTAL SHEETS
04	SF	80	13.2/13.9	594R1	1204

REGISTERED ENGINEER - CIVIL

12-6-04
PLANS APPROVAL DATE

REGISTERED PROFESSIONAL ENGINEER Marwan N. Nader No. C 054426 Exp. 12/31/07 CIVIL STATE OF CALIFORNIA

The State of California or its officers or agents shall not be responsible for the accuracy or completeness of electronic copies of this plan sheet.

T.Y. LIN / MOFFATT & NICHOL
825 BATTERY STREET
SAN FRANCISCO, CA 94111

Caltrans now has a web site! To get to the web site, go to: http://www.dot.ca.gov

100 % PS&E

DATE PLOTTED => 19 MAR 2007 TIME PLOTTED => 14:46:51

USERNAME => ptom

R. Valizadeh/V. Toan/Y.L./W.L./F.C.
DESIGN OVERSIGHT
Reza Valizadeh / Vona Toan / Y. Liu
SIGN OFF DATE 02/28/07

Rev. Date: 5-18-98

DESIGN	BY M. Nader	CHECKED S. Camo	
DETAILS	BY L. Rus	CHECKED S. Camo	
QUANTITIES	BY L. Rus	CHECKED Y. Zhang	

PREPARED FOR THE STATE OF CALIFORNIA DEPARTMENT OF TRANSPORTATION

R. Manzanarez
PROJECT ENGINEER

BRIDGE NO. 34-0006L/R
KILOMETER POST 13.2/13.9

ORIGINAL SCALE IN MILLIMETERS FOR REDUCED PLANS 0 10 20 30 40 50 60 70 80 90 100

CU 04
EA 0120F1

SAN FRANCISCO OAKLAND BAY BRIDGE
EAST SPAN SEISMIC SAFETY PROJECT
SELF-ANCHORED SUSPENSION BRIDGE
(SUPERSTRUCTURE & TOWER)

TOWER ANCHORAGE DETAILS NO. 2

DISREGARD PRINTS BEARING EARLIER REVISION DATES

REVISION DATES (PRELIMINARY STAGE ONLY) 01/15/99 05/15/99 08/02/99 05/31/01 04/08/02 07/01/02 12/19/02

SHEET 177R1 OF

FILE => L:\BB\04-012001\SAS\Contract Plans and CCO\CCO\In Progress\CCO#36\aetwa01.dgn

DIST.	COUNTY	ROUTE	KILOMETER POST TOTAL PROJECT	SHEET NO.	TOTAL SHEETS
04	SF	80	13.2/13.9	596R1	1204

REGISTERED ENGINEER - CIVIL

12-6-04
PLANS APPROVAL DATE

REGISTERED PROFESSIONAL ENGINEER Marwan N. Nader No. C 054426 Exp. 12/31/07 CIVIL STATE OF CALIFORNIA

The State of California or its officers or agents shall not be responsible for the accuracy or completeness of electronic copies of this plan sheet.

T.Y. LIN / MOFFATT & NICHOL
825 BATTERY STREET
SAN FRANCISCO, CA 94111

Caltrans now has a web site! To get to the web site, go to: http://www.dot.ca.gov

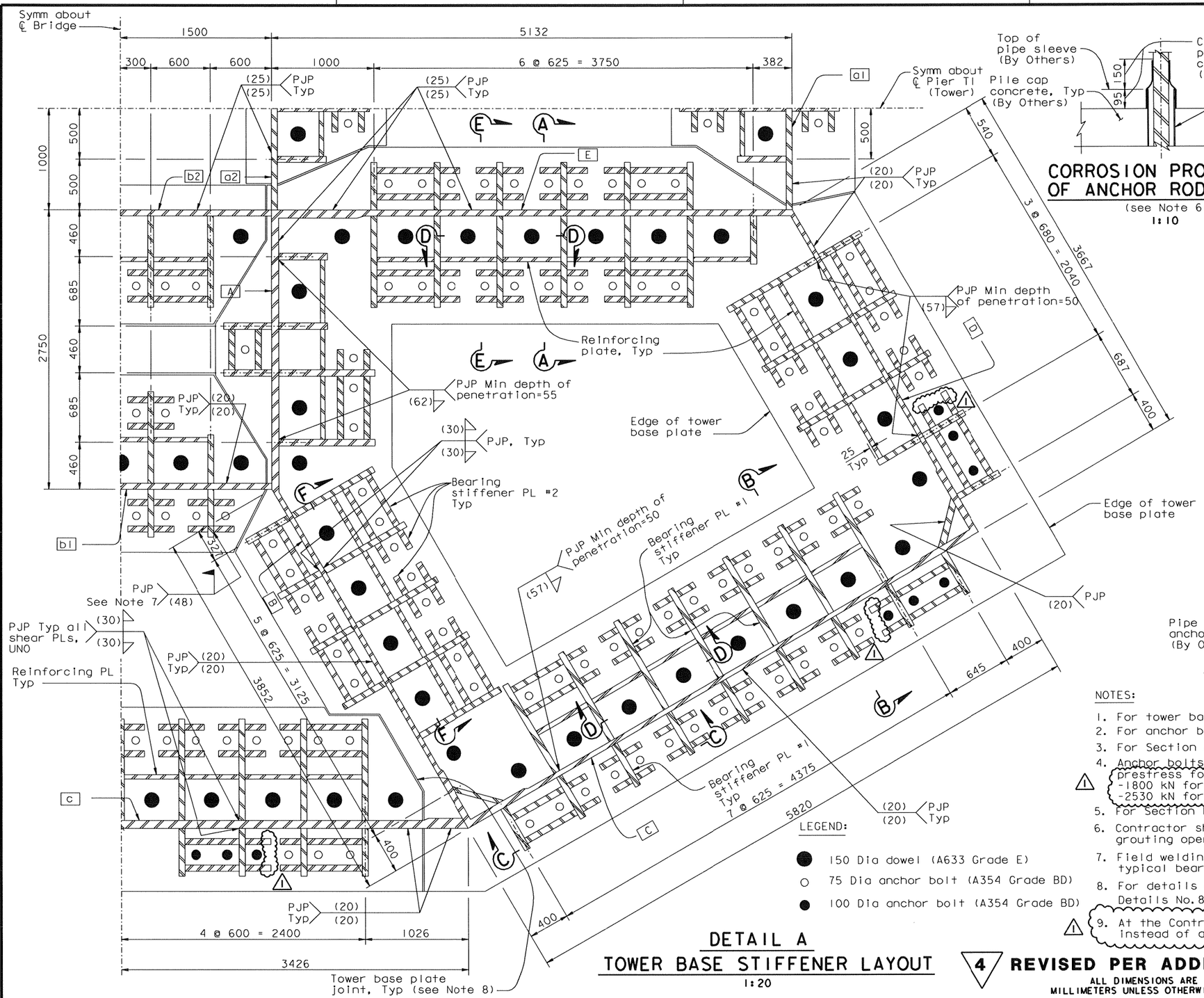

DETAIL A
TOWER BASE STIFFENER LAYOUT
1:20

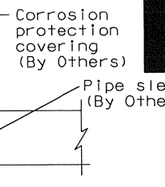

CORROSION PROTECTION OF ANCHOR RODS
(see Note 6)
1:10

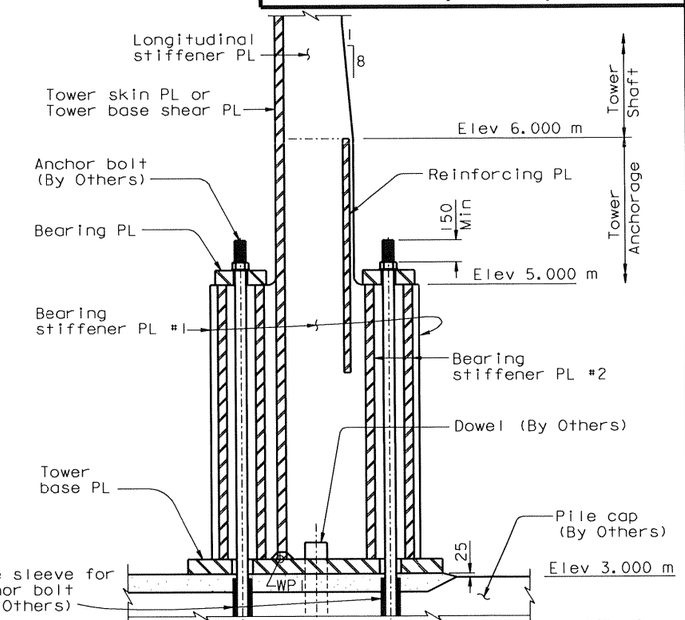

TYPICAL TOWER ANCHORAGE CROSS SECTION
SECTION E-E
1:20

NOTES:

1. For tower base plate layout, see "Tower Anchorage Details No.2" sheet.
2. For anchor bolts and dowels layout, see "Tower Anchorage Details No.3" sheet.
3. For Section A-A, B-B, C-C, and D-D, see "Tower Anchorage Details No.5" sheet.
4. Anchor bolts shall be prestressed as required to provide an effective prestress force as follows:
   -1800 kN for 75 diameter anchor bolts
   -2530 kN for 100 diameter anchor bolts
5. For Section F-F, see "Tower Anchorage Details No.7" sheet.
6. Contractor shall remove corrosion protection covering prior to grouting operations.
7. Field welding is for this bearing stiffener only. For welding of typical bearing stiffeners, see "Tower Anchorage Details No.5" sheet.
8. For details of tower base plate joint, see "Tower Anchorage Details No.8" sheet.
9. At the Contractor's option, an equivalent 2-sided PJP may be used instead of a 1-sided PJP.

4 REVISED PER ADDENDUM NO. 4 DATED DECEMBER 9, 2005

ALL DIMENSIONS ARE IN MILLIMETERS UNLESS OTHERWISE SHOWN

R. Valizadeh/V. Toan/Y.L./W.L./F.C.
DESIGN OVERSIGHT
SIGN OFF DATE 05/11/07

Rev. Date: 5-18-98

MARK	DATE	DESCRIPTIONS	BY	CH'D	CCO#
1	05/11/07	TOWER STIFFENERS	MN	NV	36

REVISIONS

CONTRACT CHANGE ORDER NO. ____
SHEET ___ OF ___

	BY	CHECKED	
DESIGN	M. Nader	S. Camo	
DETAILS	L. Rus	S. Camo	
QUANTITIES	L. Rus	Y. Zhang	

ORIGINAL SCALE IN MILLIMETERS FOR REDUCED PLANS 0 10 20 30 40 50 60 70 80 90 100

PREPARED FOR THE STATE OF CALIFORNIA DEPARTMENT OF TRANSPORTATION

R. Manzanarez
PROJECT ENGINEER

CU 04
EA 0120F1

BRIDGE NO. 34-0006L/R
KILOMETER POST 13.2/13.9

SAN FRANCISCO OAKLAND BAY BRIDGE
EAST SPAN SEISMIC SAFETY PROJECT
SELF-ANCHORED SUSPENSION BRIDGE
(SUPERSTRUCTURE & TOWER)

TOWER ANCHORAGE DETAILS NO. 4

DISREGARD PRINTS BEARING EARLIER REVISION DATES

REVISION DATES (PRELIMINARY STAGE ONLY): 05/15/99 08/06/99 05/31/01 04/08/02 07/07/02 12/19/02 01/14/03 11/13/05

SHEET 179R1 OF

FILE => I:\bb\04-012001\sas\contract plans and cco\cco\in progress\cco#36\aetwa03.dgn

USERNAME => vignatovs DATE PLOTTED => 15 MAY 2007 TIME PLOTTED => 07:33:14

100% PS&E

DIST.	COUNTY	ROUTE	KILOMETER POST TOTAL PROJECT	SHEET NO.	TOTAL SHEETS
04	SF	80	13.2/13.9	597R2	1204

Caltrans Metric

REGISTERED ENGINEER - CIVIL

12-6-04
PLANS APPROVAL DATE

REGISTERED PROFESSIONAL ENGINEER Marwan N. Nader No. C 054426 Exp. 12/31/07 CIVIL STATE OF CALIFORNIA

The State of California or its officers or agents shall not be responsible for the accuracy or completeness of electronic copies of this plan sheet.

T.Y. LIN / MOFFATT & NICHOL
825 BATTERY STREET
SAN FRANCISCO, CA 94111

To get to the web site, go to: http://www.dot.ca.gov

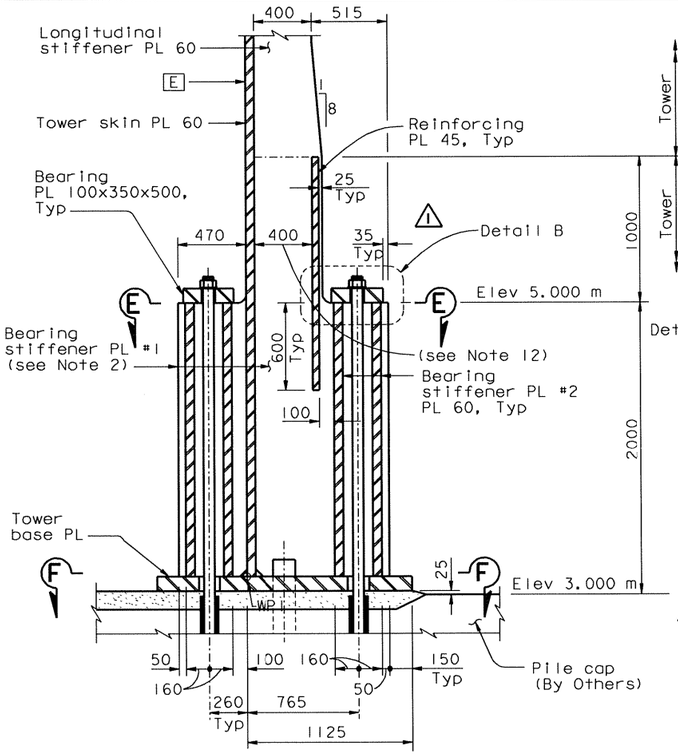

SECTION A-A
1:20
(Section at skin PL E is shown. Sections at skin PL A, B, and Tower base shear PL a2, b1, and b2 are similar. See Note 3)

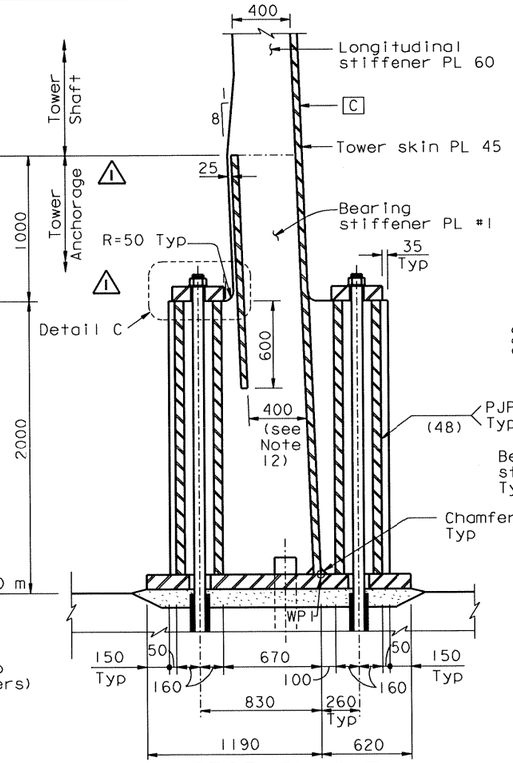

SECTION B-B
1:20
(Section at skin PL C is shown. Section at skin PL D, and Tower base shear PL a1, and c are similar. See Note 3)

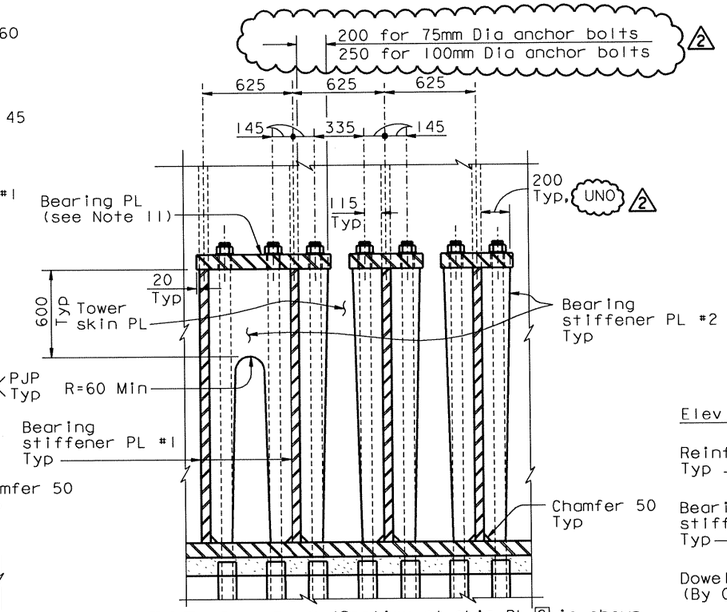

SECTION C-C
1:20
(Section at skin PL C is shown. Sections at skin PL A, B, D, E and Tower base shear PL a1, a2, b1, b2 and c are similar. See Note 3)

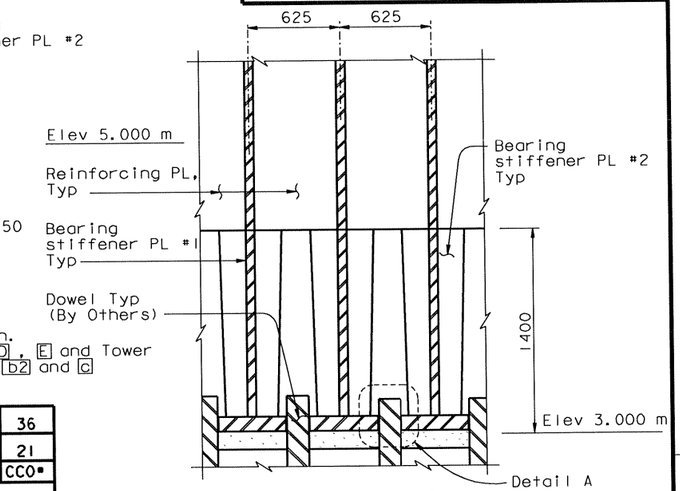

SECTION D-D
1:20

MARK	DATE	DESCRIPTIONS	BY	CH'D	CCO#
2	05/11/07	TOWER STIFFENERS	MN	NV	36
1	06/23/06	DELETE GAP TABLES	MN	NV	21

REVISIONS

CONTRACT CHANGE ORDER NO. ____
SHEET ___ OF ___

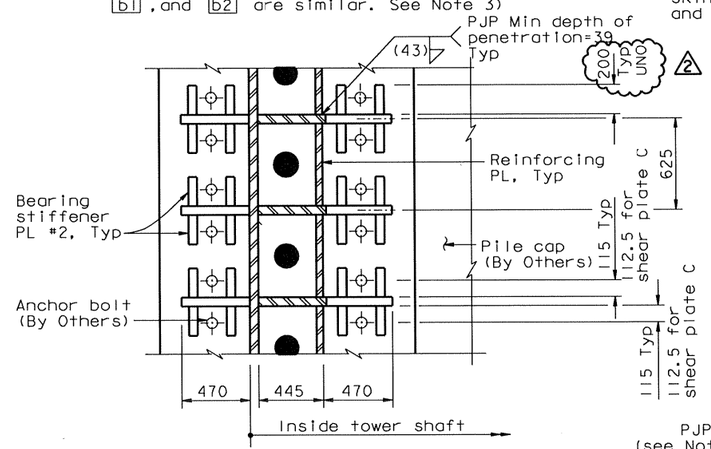

SECTION E-E
1:20
(Section at skin PL E is shown. Other skin PL and tower base shear PL are similar)

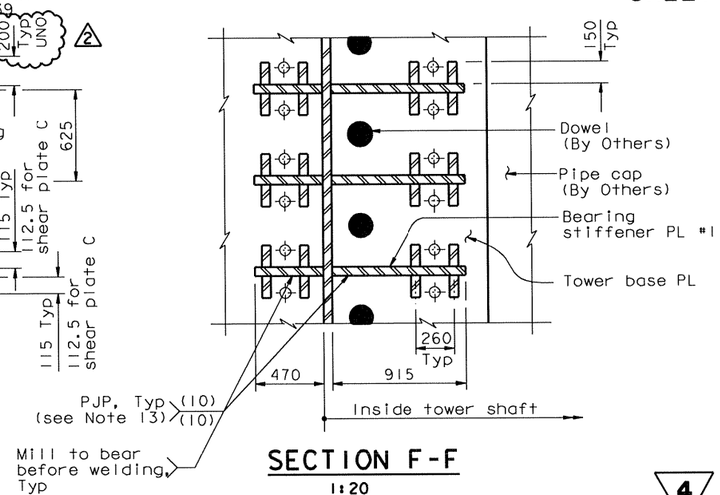

SECTION F-F
1:20
(Section at skin PL E is shown. Other skin PL and tower base shear PL are similar)

NOTES:

1. Bearing stiffener plates shall be milled to bear against the Bearing PL.
2. Bearing stiffener plate #1 thickness shall match longitudinal stiffener plate thickness.
3. For tower skin plate, longitudinal stiffener and base shear plate sizes and dimensions, see "Tower Shaft Details" sheets.
4. For tower base plate layout, see "Tower Anchorage Details No.2" sheet.
5. For anchor bolt and dowels layout, see "Tower Anchorage Details No.3" sheet.
6. For tower base plate stiffener layout, see "Tower Anchorage Details No.4" sheet.
7. For Detail A, see "Tower Anchorage Details No.7" sheet.
8. For weld size of longitudinal stiffener to tower skin plate, see "Tower Splice Details No.2" sheet.
9. For Details B and C, see "Tower Anchorage Details No.6" sheet.
10. Bearing stiffener PL #2 shall be milled to bear against tower base plate.
11. A single bearing plate shall be used at locations where Bearing Stiffener PL #2 are connected.
12. The clear distance between the inner face of the tower skin plate and the reinforcing plate shall match the longitudinal stiffener plate width. For longitudinal stiffener plate width, see "Tower Shaft Details" sheets.
13. At the base of stiffeners two-sided PJP welds may be replaced with equivalent single-sided welds, subject to approval by the Engineer.

4 REVISED PER ADDENDUM NO. 4 DATED DECEMBER 9, 2005

ALL DIMENSIONS ARE IN MILLIMETERS UNLESS OTHERWISE SHOWN

100% PS&E

SAN FRANCISCO OAKLAND BAY BRIDGE
EAST SPAN SEISMIC SAFETY PROJECT
SELF-ANCHORED SUSPENSION BRIDGE
(SUPERSTRUCTURE & TOWER)

TOWER ANCHORAGE DETAILS NO. 5

R. Valizadeh/V. Toan/Y.L./W.L./F.C.
DESIGN OVERSIGHT
Ryan Valizadeh / Vong Toan / Y. Liu
SIGN OFF DATE 05/11/07

	BY	CHECKED
DESIGN	M. Nader	S. Camo
DETAILS	L. Rus	S. Camo
QUANTITIES	L. Rus	Y. Zhang

PREPARED FOR THE STATE OF CALIFORNIA DEPARTMENT OF TRANSPORTATION

R. Manzanarez
PROJECT ENGINEER

BRIDGE NO. 34-0006L/R
KILOMETER POST 13.2/13.9

CU 04
EA 0120F1

DISREGARD PRINTS BEARING EARLIER REVISION DATES

REVISION DATES (PRELIMINARY STAGE ONLY): 05/15/99 08/26/99 05/31/01 01/08/02 07/09/02 12/13/02 07/18/03 11/13/05

SHEET 180R2 OF

Rev. Date: 5-18-98

ORIGINAL SCALE IN MILLIMETERS FOR REDUCED PLANS 0 10 20 30 40 50 60 70 80 90 100

FILE => I:\bb\04-012001\sas\contract plans and cco\cco\in progress\cco#36\aetwa04.dgn

USERNAME => vignatovs DATE PLOTTED => 15 MAY 2007 TIME PLOTTED => 07:31:11

DIST.	COUNTY	ROUTE	KILOMETER POST TOTAL PROJECT	SHEET NO.	TOTAL SHEETS
04	SF	80	13.2/13.9	598R2	1204

Caltrans Metric

REGISTERED ENGINEER - CIVIL

12-6-04
PLANS APPROVAL DATE

REGISTERED PROFESSIONAL ENGINEER Marwan N. Nader No. C 054426 Exp. 12/31/07 CIVIL STATE OF CALIFORNIA

The State of California or its officers or agents shall not be responsible for the accuracy or completeness of electronic copies of this plan sheet.

T.Y. LIN / MOFFATT & NICHOL
825 BATTERY STREET
SAN FRANCISCO, CA 94111

To get to the web site, go to: http://www.dot.ca.gov

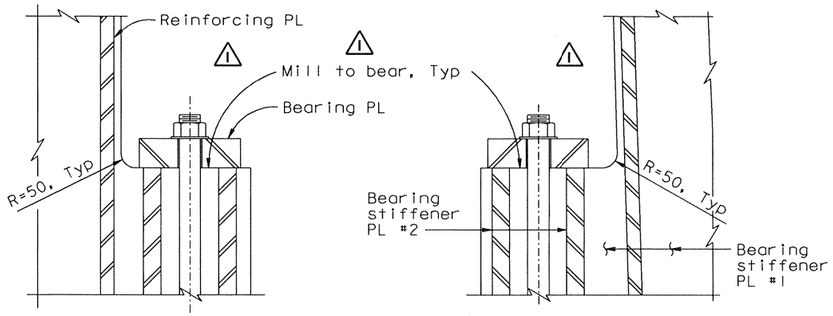

DETAIL B
1:10

DETAIL C
1:10

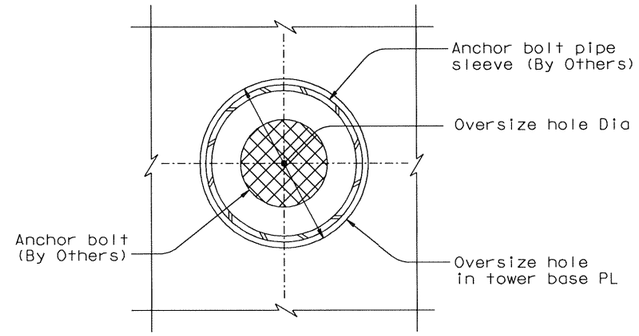

AT TOWER BASE PLATE

ANCHOR BOLT HOLE PLAN VIEW
1:2.5

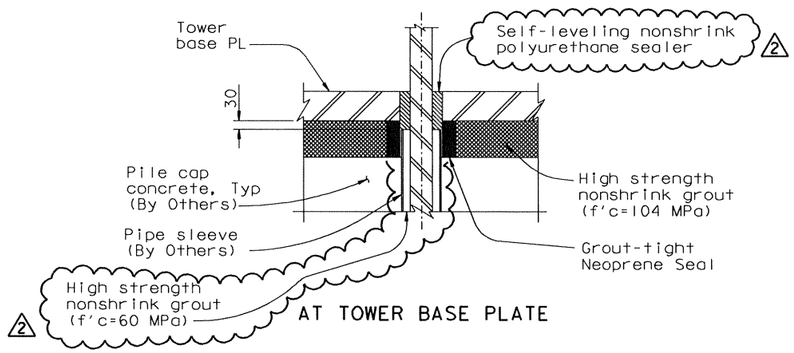

AT TOWER BASE PLATE

ANCHOR BOLT ELEVATION VIEW
1:10

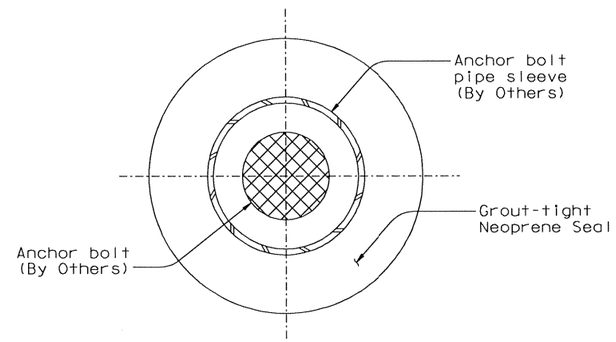

GROUT-TIGHT NEOPRENE SEAL PLAN VIEW (see Note 3)
NTS

MARK	DATE	DESCRIPTIONS	BY	CH'D	CCO#
2	02/28/07	TOWER BASE PLATE	JD	MN	36
1	06/23/06	DELETE GAP TABLES	MN	NV	21

REVISIONS

CONTRACT CHANGE ORDER NO. ____
SHEET ____ OF ____

Anchor Bolt Dia	75	100
Oversize hole Dia	145	170

LEGEND:

- High strength nonshrink grout (f'c=104 MPa)
- High strength nonshrink grout (f'c=60 MPa)
- Self-leveling nonshrink polyurethane sealer

NOTES:

1. Anchor bolt pipe sleeve shall be filled with nonshrink grout. For additional prestressing details, see "Prestressing Notes" sheet.
2. The Contractor shall develop a scheme for grouting the anchor bolts and submit for review and approval by the Engineer.
3. Grout-tight neoprene seal shown is schematic and is for information only. The seal shall prevent any high strength nonshrink grout from seeping inside the anchor bolt pipe sleeves during grouting of the tower base plate. This is necessary for proper stressing of the anchor bolts. Once final stressing of the anchor bolts is complete, the pipe sleeves shall be grouted (see Note 2). The Contractor shall submit seal details consistent with his means and methods to the Engineer for review and approval.

100 % PS&E

ALL DIMENSIONS ARE IN MILLIMETERS UNLESS OTHERWISE SHOWN

SAN FRANCISCO OAKLAND BAY BRIDGE
EAST SPAN SEISMIC SAFETY PROJECT
SELF-ANCHORED SUSPENSION BRIDGE
(SUPERSTRUCTURE & TOWER)

TOWER ANCHORAGE DETAILS NO. 6

R. Valizadeh/V. Toan/Y.L./W.L./F.C.
DESIGN OVERSIGHT
Roger Valizadeh / Vona Toan / Y. Liu
SIGN OFF DATE 02/28/07

	BY	CHECKED
DESIGN	M. Nader	S. Camo
DETAILS	L. Rus	S. Camo
QUANTITIES	L. Rus	Y. Zhang

PREPARED FOR THE STATE OF CALIFORNIA DEPARTMENT OF TRANSPORTATION

R. Manzanarez
PROJECT ENGINEER

BRIDGE NO. 34-0006L/R
KILOMETER POST 13.2/13.9

Rev. Date: 5-18-98

ORIGINAL SCALE IN MILLIMETERS FOR REDUCED PLANS 0 10 20 30 40 50 60 70 80 90 100

CU 04
EA 0120F1

DISREGARD PRINTS BEARING EARLIER REVISION DATES

REVISION DATES (PRELIMINARY STAGE ONLY) 04/08/02 07/01/02 12/19/02 07/18/03

SHEET 181R2 OF

FILE => I:\bb\04-012001\sas\contract plans and cco\cco\in progress\cco#36\aetwa06.dgn

USERNAME => alishansky DATE PLOTTED => 16 MAR 2007 TIME PLOTTED => 08:10:43

DIST.	COUNTY	ROUTE	KILOMETER POST TOTAL PROJECT	SHEET NO.	TOTAL SHEETS
04	SF	80	13.2/13.9	599R2	1204

Caltrans Metric

REGISTERED ENGINEER - CIVIL

12-6-04
PLANS APPROVAL DATE

REGISTERED PROFESSIONAL ENGINEER
Marwan N. Nader
No. C 054426
Exp. 12/31/07
CIVIL
STATE OF CALIFORNIA

The State of California or its officers or agents shall not be responsible for the accuracy or completeness of electronic copies of this plan sheet.

T.Y. LIN / MOFFATT & NICHOL
825 BATTERY STREET
SAN FRANCISCO, CA 94111

Caltrans now has a web site! To get to the web site, go to: http://www.dot.ca.gov

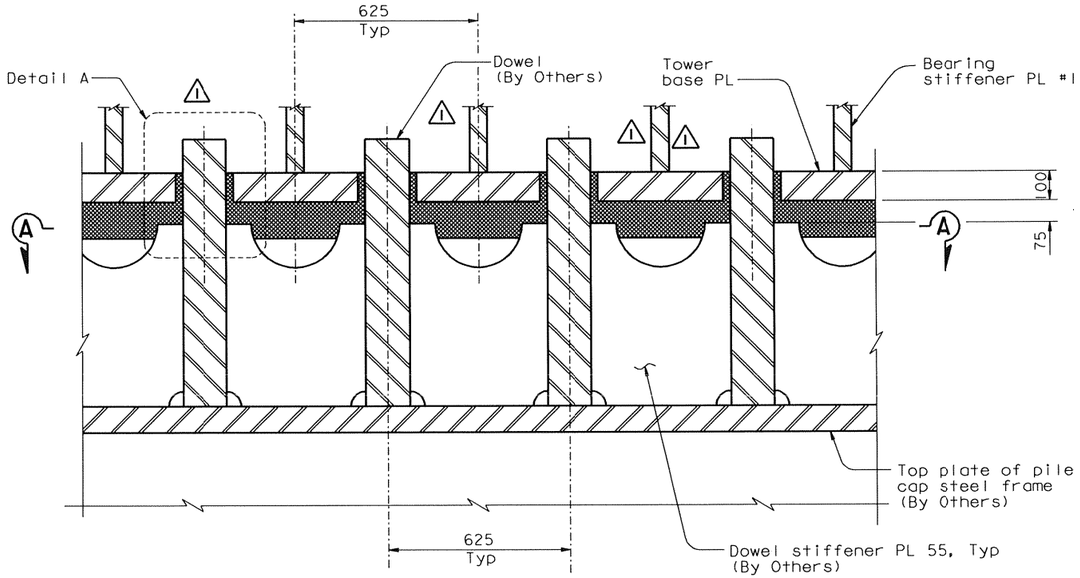

SECTION F-F
1:10
(Section at B shown, others are similar)

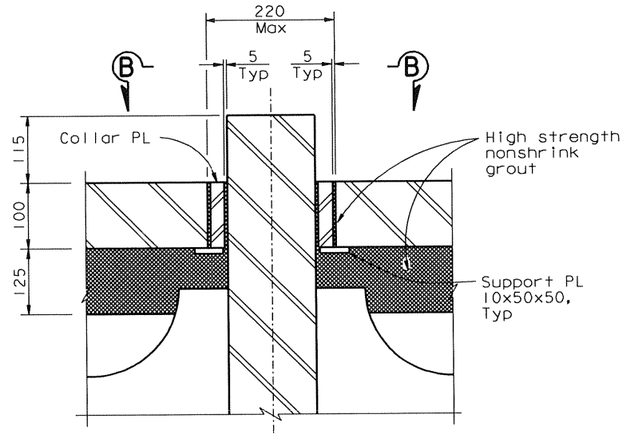

DOWEL ANCHORAGE CONTINGENCY DETAIL (see Note 2)
1:5

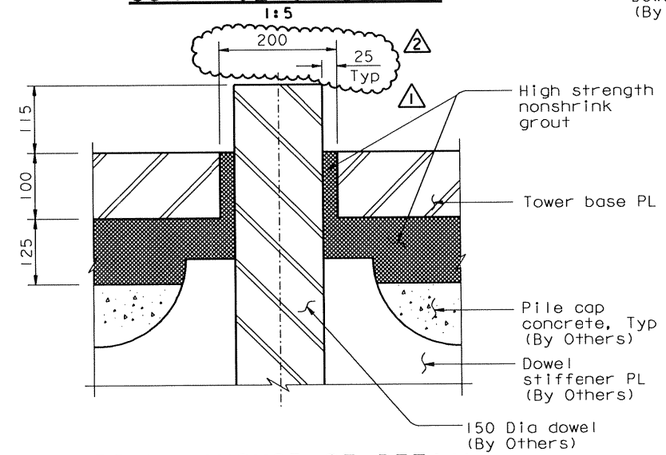

DOWEL ANCHORAGE DETAIL
DETAIL A
1:5

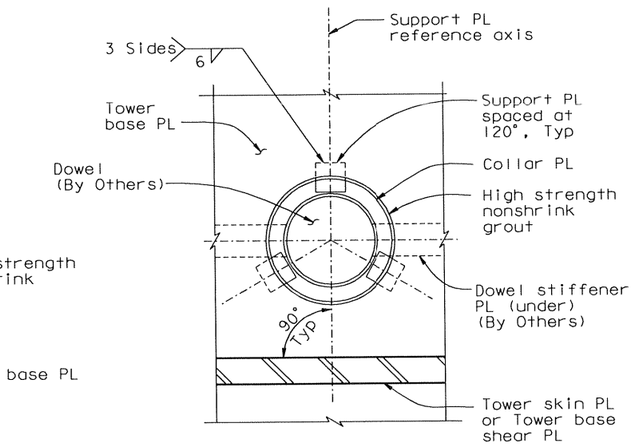

VIEW B-B
1:5

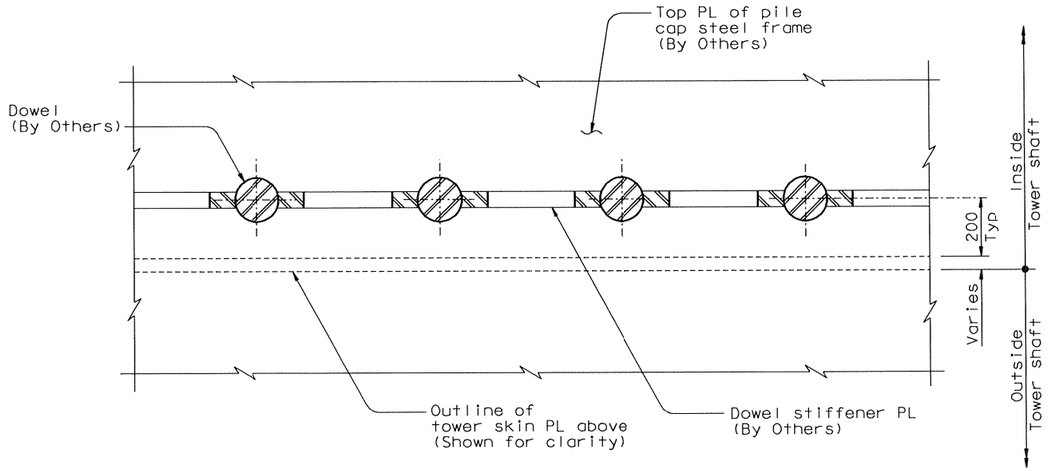

SECTION A-A
1:10

LEGEND:

High strength nonshrink grout (f'c=104 MPa)

NOTES:

1. For dowel layout, see "Tower Anchorage Details No.3" sheet.
2. Oversize hole in tower base PL is an acceptable alternative to accomodate tolerance requirements for the erection of the tower base plate. Collar plates shall be A709M Gr.345 and shall be fabricated based on field measurements and then installed.

MARK	DATE	DESCRIPTIONS	BY	CH'D	CCO#
2	04/03/07	TOWER BASE PLATE	JD	MN	36
1	02/28/07	TOWER BASE PLATE	JD	MN	36

REVISIONS

CONTRACT CHANGE ORDER NO. _____
SHEET ____ OF ____

ALL DIMENSIONS ARE IN MILLIMETERS UNLESS OTHERWISE SHOWN

SAN FRANCISCO OAKLAND BAY BRIDGE
EAST SPAN SEISMIC SAFETY PROJECT
SELF-ANCHORED SUSPENSION BRIDGE
(SUPERSTRUCTURE & TOWER)

TOWER ANCHORAGE DETAILS NO. 7

R. Valizadeh/V. Toan/Y.L./W.L./F.C.
DESIGN OVERSIGHT
Roger Valizadeh / Vona Toan / Y. Liu
SIGN OFF DATE 04/03/07

	BY	CHECKED
DESIGN	M. Nader	S. Camo
DETAILS	L. Rus	S. Camo
QUANTITIES	L. Rus	Y. Zhang

PREPARED FOR THE STATE OF CALIFORNIA DEPARTMENT OF TRANSPORTATION

R. Manzanarez
PROJECT ENGINEER

BRIDGE NO. 34-0006L/R
KILOMETER POST 13.2/13.9

Rev. Date: 5-18-98

ORIGINAL SCALE IN MILLIMETERS FOR REDUCED PLANS 0 10 20 30 40 50 60 70 80 90 100

CU 04
EA 0120F1

DISREGARD PRINTS BEARING EARLIER REVISION DATES

REVISION DATES (PRELIMINARY STAGE ONLY) 05/15/99 08/02/99 05/31/01 04/08/02 07/01/02 12/19/02

SHEET 182R2 OF

FILE => I:\bb\04-012001\sas\contract plans and cco\cco\in progress\cco#36\aetwa05.dgn

USERNAME => kio DATE PLOTTED => 03 APR 2007 TIME PLOTTED => 14:12:37

100 % PS&E

DIST.	COUNTY	ROUTE	KILOMETER POST TOTAL PROJECT	SHEET NO.	TOTAL SHEETS
04	SF	80	13.2/13.9	600R1	1204

Caltrans Metric

REGISTERED ENGINEER - CIVIL

12-6-04
PLANS APPROVAL DATE

REGISTERED PROFESSIONAL ENGINEER Marwan N. Nader No. C 054426 Exp. 12/31/07 CIVIL STATE OF CALIFORNIA

The State of California or its officers or agents shall not be responsible for the accuracy or completeness of electronic copies of this plan sheet.

T.Y. LIN / MOFFATT & NICHOL
825 BATTERY STREET
SAN FRANCISCO, CA 94111

To get to the web site, go to: http://www.dot.ca.gov

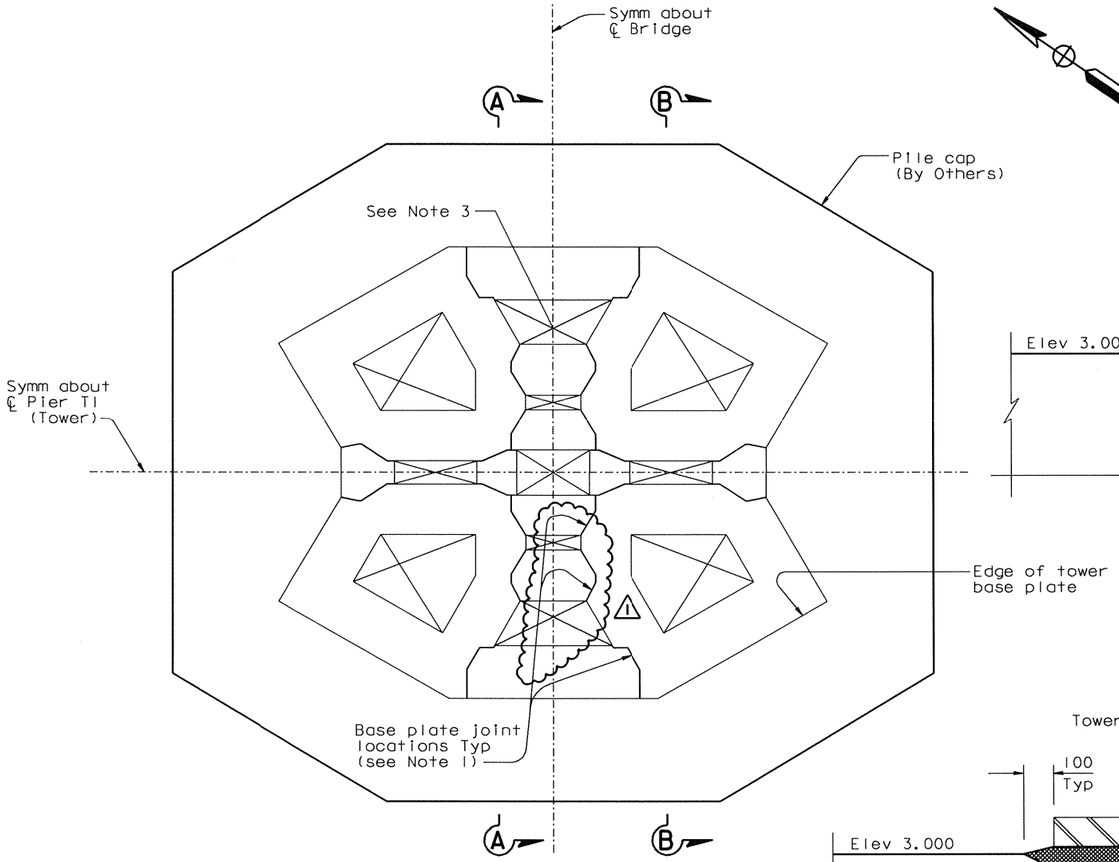

TOWER BASE ASSEMBLY PLAN
1:100

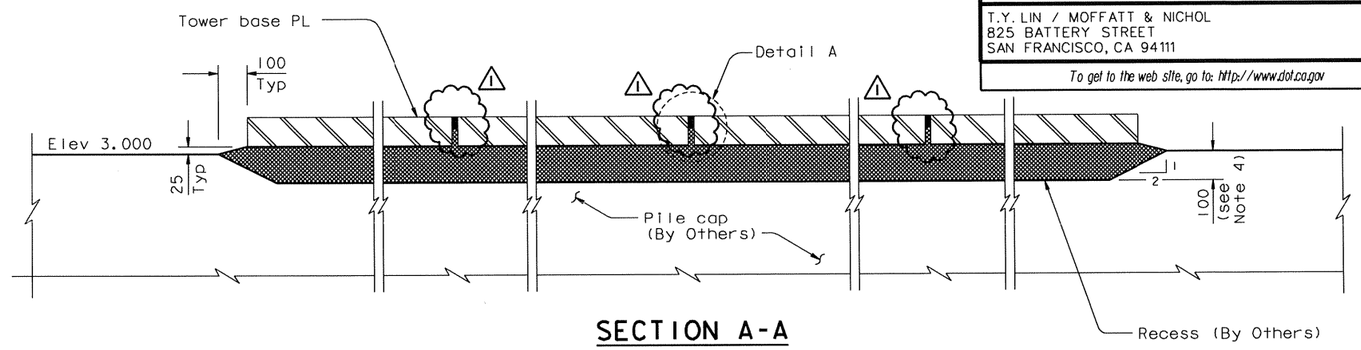

SECTION A-A
1:10

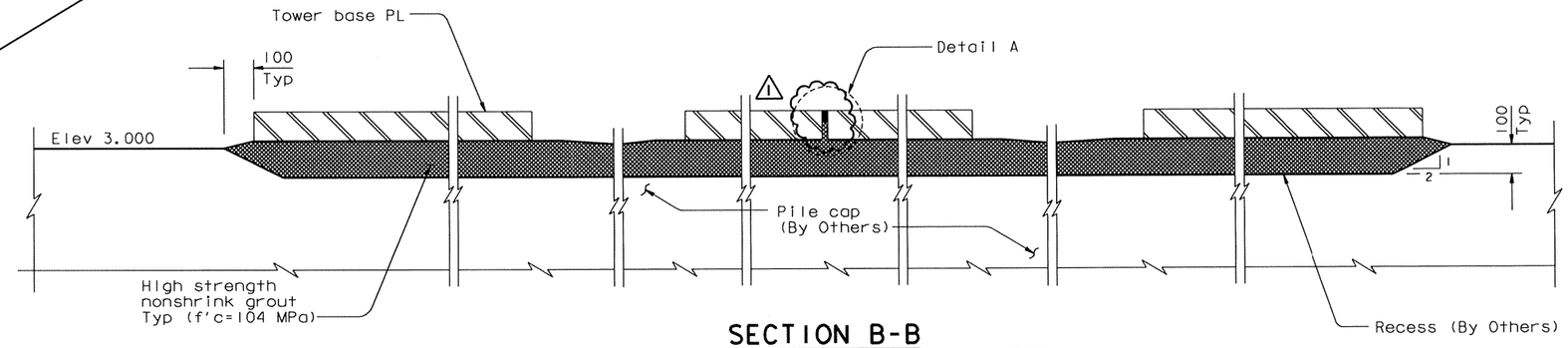

SECTION B-B
1:10

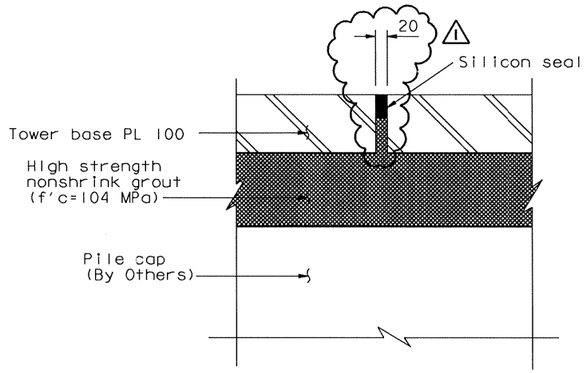

DETAIL A
1:5

NOTES:

1. For layout of tower base plate joint, see "Tower Anchorage Details No. 2" sheet. The Contractor may provide an alternative layout subject to the review and approval of the Engineer.
2. Base plates under each tower shaft and each shear plate shall be single plates or shall be built up from pieces by CJP welds done in the shop.
3. For tower drainage, see "Tower Drainage Details" sheets.
4. The Contractor may vary the depth of grout in order to achieve specified tolerances, provided there is positive flow towards the drains and the elevation of the top of the tower base plate is higher than the top of the drain.

MARK	DATE	DESCRIPTIONS	BY	CH'D	CCO#
1	02/28/07	TOWER BASE PLATE	AS	MN	36

REVISIONS

CONTRACT CHANGE ORDER NO. ____
SHEET ___ OF ___

ALL DIMENSIONS ARE IN MILLIMETERS UNLESS OTHERWISE SHOWN

100 % PS&E

SAN FRANCISCO OAKLAND BAY BRIDGE
EAST SPAN SEISMIC SAFETY PROJECT

SELF-ANCHORED SUSPENSION BRIDGE
(SUPERSTRUCTURE & TOWER)

TOWER ANCHORAGE DETAILS NO. 8

R. Valizadeh/V. Toan/Y.L./W.L./F.C.
DESIGN OVERSIGHT
SIGN OFF DATE 02/28/07

	BY	CHECKED
DESIGN	M. Nader	S. Camo
DETAILS	L. Rus	S. Camo
QUANTITIES	L. Rus	Y. Zhang

PREPARED FOR THE STATE OF CALIFORNIA DEPARTMENT OF TRANSPORTATION

R. Manzanarez
PROJECT ENGINEER

BRIDGE NO. 34-0006L/R
KILOMETER POST 13.2/13.9

REVISION DATES (PRELIMINARY STAGE ONLY): 05/23/01 04/08/02 07/01/02 12/19/02

SHEET 183R1 OF

Rev. Date: 5-18-98

ORIGINAL SCALE IN MILLIMETERS FOR REDUCED PLANS 0 10 20 30 40 50 60 70 80 90 100

CU 04
EA 0120F1

DISREGARD PRINTS BEARING EARLIER REVISION DATES

FILE => I:\bb\04-012001\sas\contract plans and cco\cco\in progress\cco#36\aetwa07.dgn

USERNAME => olshansky DATE PLOTTED => 16 MAR 2007 TIME PLOTTED => 08:12:38