DIST.	COUNTY	ROUTE	KILOMETER POST TOTAL PROJECT	SHEET NO.	TOTAL SHEETS
04	SF	80	13.2/13.9	597R2	1204

REGISTERED ENGINEER - CIVIL

12-6-04
PLANS APPROVAL DATE

REGISTERED PROFESSIONAL ENGINEER Marwan N. Nader No. C 054426 Exp. 12/31/07 CIVIL STATE OF CALIFORNIA

The State of California or its officers or agents shall not be responsible for the accuracy or completeness of electronic copies of this plan sheet.

T.Y. LIN / MOFFATT & NICHOL
825 BATTERY STREET
SAN FRANCISCO, CA 94111

To get to the web site, go to: http://www.dot.ca.gov

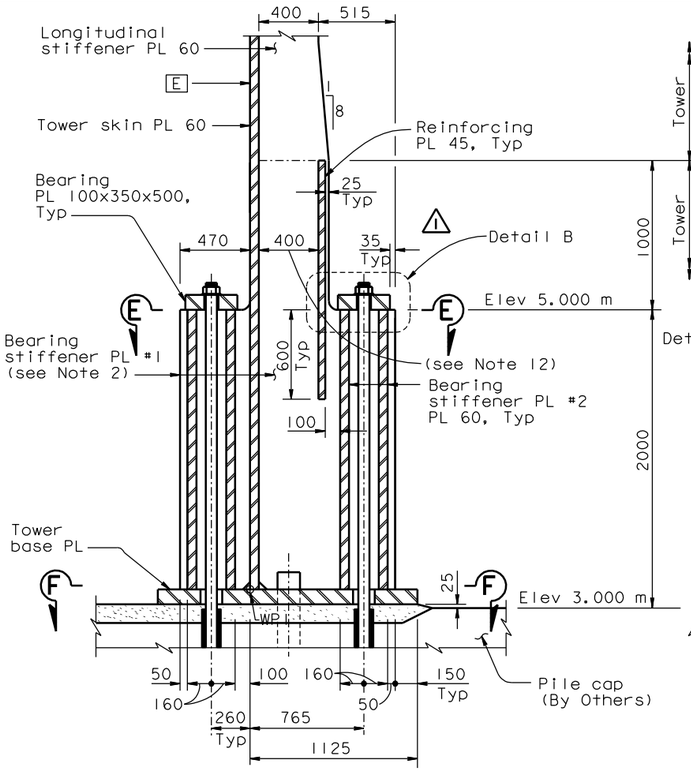

SECTION A-A
1:20
(Section at skin PL E is shown. Sections at skin PL A, B, and Tower base shear PL a2, b1, and b2 are similar. See Note 3)

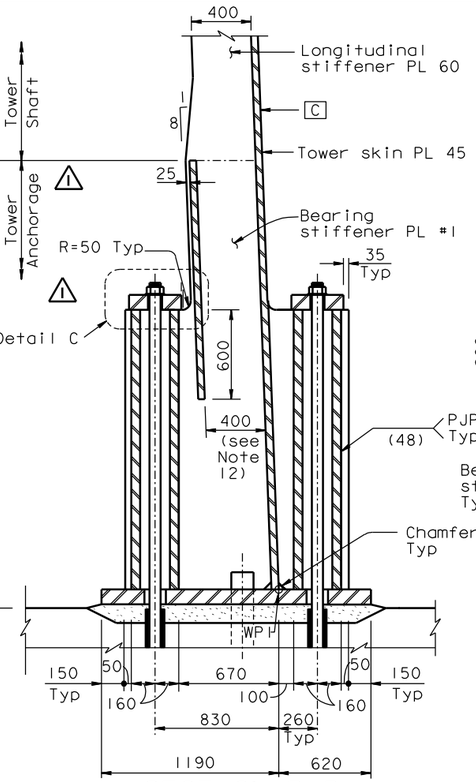

SECTION B-B
1:20
(Section at skin PL C is shown. Section at skin PL D, and Tower base shear PL a1, and c are similar. See Note 3)

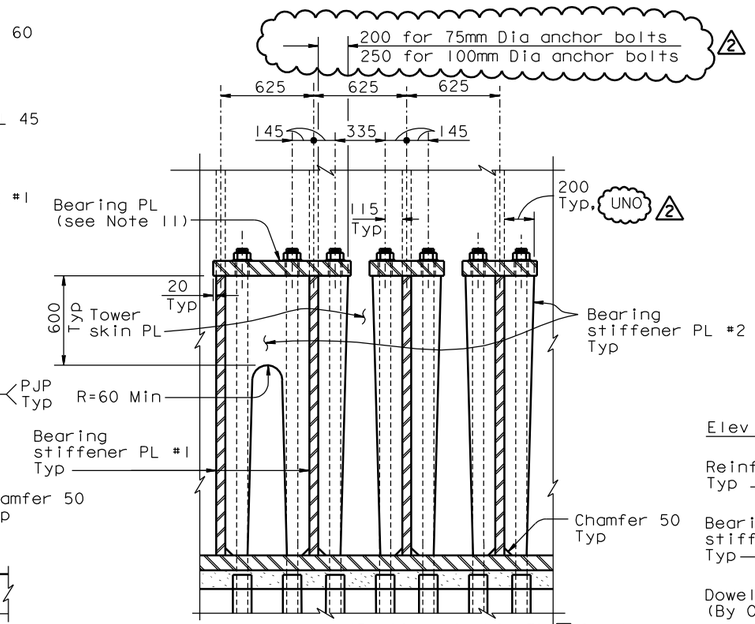

SECTION C-C
1:20
(Section at skin PL C is shown. Sections at skin PL A, B, D, E and Tower base shear PL a1, a2, b1, b2 and c are similar. See Note 3)

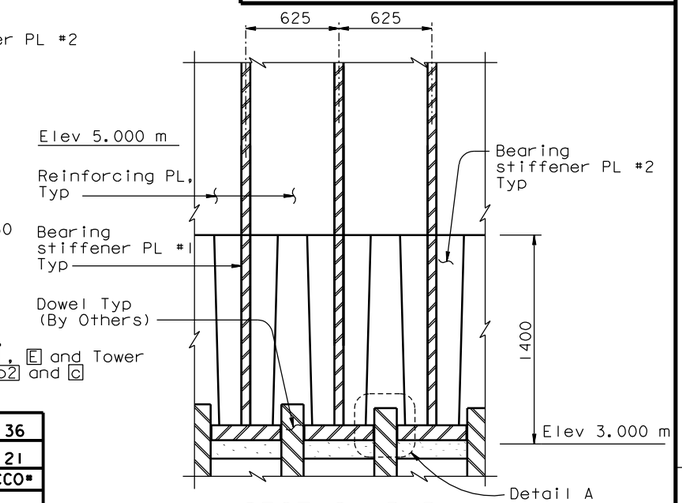

SECTION D-D
1:20

MARK	DATE	DESCRIPTIONS	BY	CH'D	CCO#
2	05/11/07	TOWER STIFFENERS	MN	NV	36
1	06/23/06	DELETE GAP TABLES	MN	NV	21

REVISIONS

CONTRACT CHANGE ORDER NO. ____
SHEET ___ OF ___

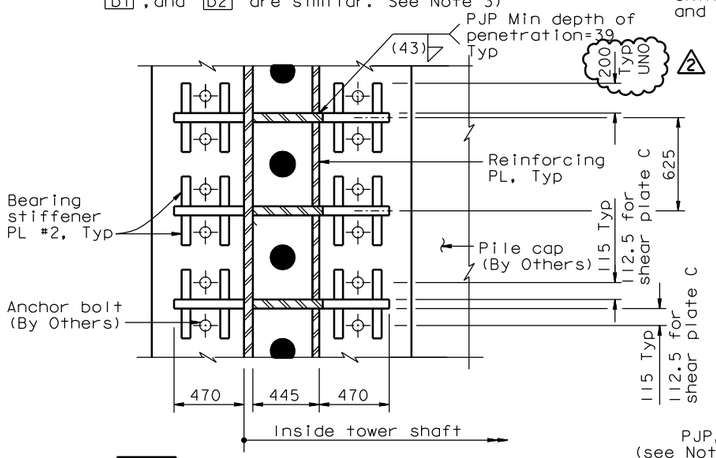

4 SECTION E-E
1:20
(Section at skin PL E is shown. Other skin PL and tower base shear PL are similar)

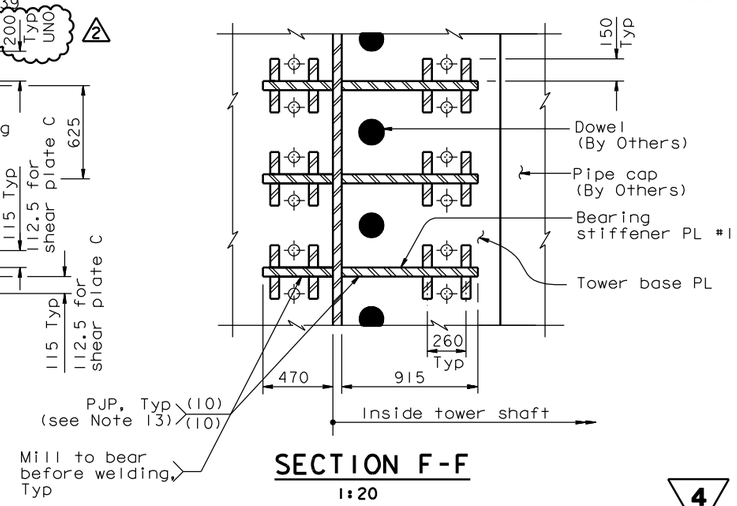

SECTION F-F
1:20
(Section at skin PL E is shown. Other skin PL and tower base shear PL are similar)

NOTES:

1. Bearing stiffener plates shall be milled to bear against the Bearing PL.
2. Bearing stiffener plate #1 thickness shall match longitudinal stiffener plate thickness.
3. For tower skin plate, longitudinal stiffener and base shear plate sizes and dimensions, see "Tower Shaft Details" sheets.
4. For tower base plate layout, see "Tower Anchorage Details No.2" sheet.
5. For anchor bolt and dowels layout, see "Tower Anchorage Details No.3" sheet.
6. For tower base plate stiffener layout, see "Tower Anchorage Details No.4" sheet.
7. For Detail A, see "Tower Anchorage Details No.7" sheet.
8. For weld size of longitudinal stiffener to tower skin plate, see "Tower Splice Details No.2" sheet.
9. For Details B and C, see "Tower Anchorage Details No.6" sheet.
10. Bearing stiffener PL #2 shall be milled to bear against tower base plate.
11. A single bearing plate shall be used at locations where Bearing Stiffener PL #2 are connected.
12. The clear distance between the inner face of the tower skin plate and the reinforcing plate shall match the longitudinal stiffener plate width. For longitudinal stiffener plate width, see "Tower Shaft Details" sheets.
13. At the base of stiffeners two-sided PJP welds may be replaced with equivalent single-sided welds, subject to approval by the Engineer.

4 REVISED PER ADDENDUM NO. 4 DATED DECEMBER 9, 2005

ALL DIMENSIONS ARE IN MILLIMETERS UNLESS OTHERWISE SHOWN

SAN FRANCISCO OAKLAND BAY BRIDGE
EAST SPAN SEISMIC SAFETY PROJECT
SELF-ANCHORED SUSPENSION BRIDGE
(SUPERSTRUCTURE & TOWER)

TOWER ANCHORAGE DETAILS NO.5

R. Valizadeh/V. Toan/Y.L./W.L./F.C.
DESIGN OVERSIGHT
Roya Valizadeh / Vong Toan / Y. Liu
SIGN OFF DATE 05/11/07

	BY	CHECKED
DESIGN	M. Nader	S. Camo
DETAILS	L. Rus	S. Camo
QUANTITIES	L. Rus	Y. Zhang

PREPARED FOR THE STATE OF CALIFORNIA DEPARTMENT OF TRANSPORTATION

R. Manzanarez
PROJECT ENGINEER

BRIDGE NO. 34-0006L/R
KILOMETER POST 13.2/13.9

CU 04
EA 0120F1

DISREGARD PRINTS BEARING EARLIER REVISION DATES

REVISION DATES (PRELIMINARY STAGE ONLY): 05/15/99 08/02/99 05/31/01 04/08/02 07/09/02 12/19/02 07/18/03 11/13/05

SHEET 180R2 OF

Rev. Date: 5-18-98

ORIGINAL SCALE IN MILLIMETERS FOR REDUCED PLANS 0 10 20 30 40 50 60 70 80 90 100

FILE => I:\bb\04-012001\sas\contract plans and cco\cco\in progress\cco#36\aetwa04.dgn

100% PS&E

USERNAME => vignotovs DATE PLOTTED => 15 MAY 2007 TIME PLOTTED => 07:31:11