DIST.	COUNTY	ROUTE	KILOMETER POST TOTAL PROJECT	SHEET NO.	TOTAL SHEETS
04	SF	80	13.2/13.9	596R1	1204

REGISTERED ENGINEER - CIVIL

12-6-04
PLANS APPROVAL DATE

REGISTERED PROFESSIONAL ENGINEER Marwan N. Nader No. C 054426 Exp. 12/31/07 CIVIL STATE OF CALIFORNIA

The State of California or its officers or agents shall not be responsible for the accuracy or completeness of electronic copies of this plan sheet.

T.Y. LIN / MOFFATT & NICHOL
825 BATTERY STREET
SAN FRANCISCO, CA 94111

Caltrans now has a web site! To get to the web site, go to: http://www.dot.ca.gov

Caltrans Metric

4

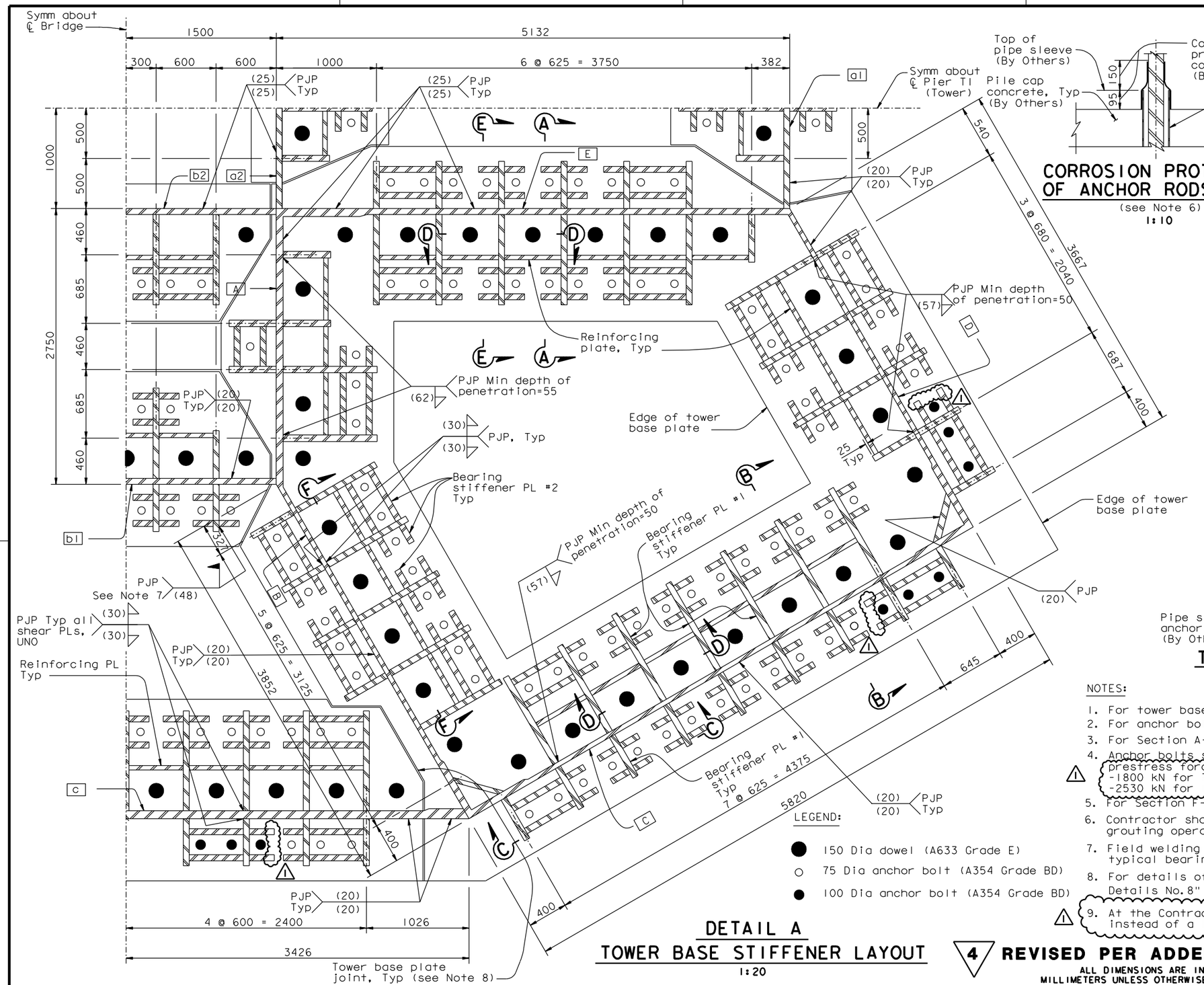

DETAIL A
TOWER BASE STIFFENER LAYOUT
1:20

LEGEND:

- ● 150 Dia dowel (A633 Grade E)
- ○ 75 Dia anchor bolt (A354 Grade BD)
- ● 100 Dia anchor bolt (A354 Grade BD)

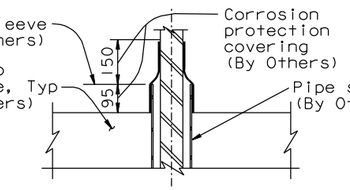

CORROSION PROTECTION OF ANCHOR RODS
(see Note 6)
1:10

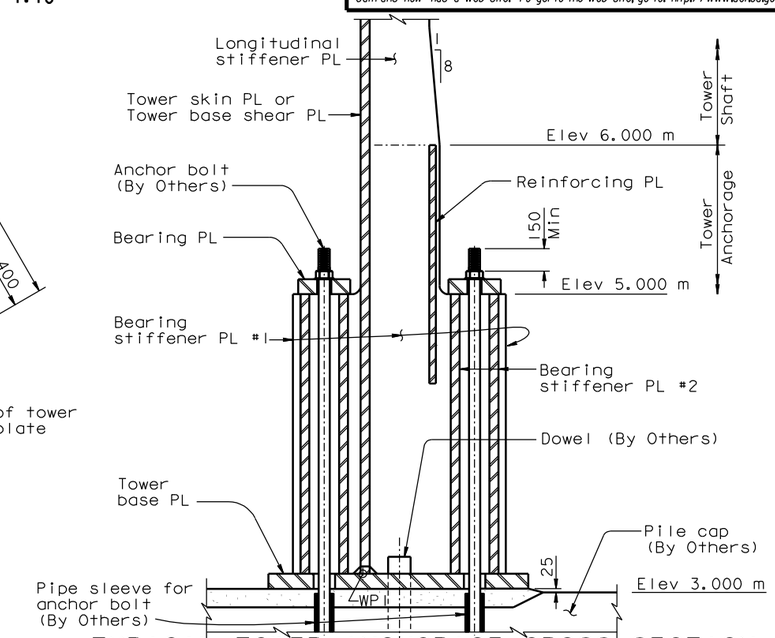

TYPICAL TOWER ANCHORAGE CROSS SECTION
SECTION E-E
1:20

NOTES:

1. For tower base plate layout, see "Tower Anchorage Details No.2" sheet.
2. For anchor bolts and dowels layout, see "Tower Anchorage Details No.3" sheet.
3. For Section A-A, B-B, C-C, and D-D, see "Tower Anchorage Details No.5" sheet.
4. Anchor bolts shall be prestressed as required to provide an effective prestress force as follows:
   -1800 kN for 75 diameter anchor bolts
   -2530 kN for 100 diameter anchor bolts
5. For Section F-F, see "Tower Anchorage Details No.7" sheet.
6. Contractor shall remove corrosion protection covering prior to grouting operations.
7. Field welding is for this bearing stiffener only. For welding of typical bearing stiffeners, see "Tower Anchorage Details No.5" sheet.
8. For details of tower base plate joint, see "Tower Anchorage Details No.8" sheet.
9. At the Contractor's option, an equivalent 2-sided PJP may be used instead of a 1-sided PJP.

4 **REVISED PER ADDENDUM NO. 4 DATED DECEMBER 9, 2005**

ALL DIMENSIONS ARE IN MILLIMETERS UNLESS OTHERWISE SHOWN

R. Valizadeh/V. Toan/Y.L./W.L./F.C.
DESIGN OVERSIGHT
Roya Valizadeh / Vong Toan / Y. Lu
SIGN OFF DATE 05/11/07
Rev. Date: 5-18-98

MARK	DATE	DESCRIPTIONS	BY	CH'D	CCO#
1	05/11/07	TOWER STIFFENERS	MN	NV	36

REVISIONS

CONTRACT CHANGE ORDER NO. ____
SHEET ____ OF ____

	BY	CHECKED
DESIGN	M. Nader	S. Camo
DETAILS	L. Rus	S. Camo
QUANTITIES	L. Rus	Y. Zhang

ORIGINAL SCALE IN MILLIMETERS FOR REDUCED PLANS 0 10 20 30 40 50 60 70 80 90 100

PREPARED FOR THE STATE OF CALIFORNIA DEPARTMENT OF TRANSPORTATION

R. Manzanarez
PROJECT ENGINEER

CU 04
EA 0120F1

BRIDGE NO. 34-0006L/R
KILOMETER POST 13.2/13.9

DISREGARD PRINTS BEARING EARLIER REVISION DATES → 05/15/99 08/02/99 05/31/01 04/08/02 07/09/02 12/18/02 07/18/03 11/13/05

SAN FRANCISCO OAKLAND BAY BRIDGE
EAST SPAN SEISMIC SAFETY PROJECT
SELF-ANCHORED SUSPENSION BRIDGE
(SUPERSTRUCTURE & TOWER)

TOWER ANCHORAGE DETAILS NO. 4

SHEET 179R1 OF

FILE => I:\bb\04-012001\sas\contract plans and cco\cco\in progress\cco#36\aetwa03.dgn

USERNAME => vignatovsky DATE PLOTTED => 15 MAY 2007 TIME PLOTTED => 07:33:14

100% PS&E