DIST.	COUNTY	ROUTE	KILOMETER POST TOTAL PROJECT	SHEET NO.	TOTAL SHEETS
04	SF	80	13.2/13.9	497S24R1	1204

Caltrans Metric

REGISTERED ENGINEER - CIVIL

07-21-06

PLANS APPROVAL DATE

REGISTERED PROFESSIONAL ENGINEER James P. Duxbury No. C 64677 Exp. 06/30/07 CIVIL STATE OF CALIFORNIA

The State of California or its officers or agents shall not be responsible for the accuracy or completeness of electronic copies of this plan sheet.

T.Y. LIN / MOFFATT & NICHOL
825 BATTERY STREET
SAN FRANCISCO, CA 94111

To get to the web site, go to: http://www.dot.ca.gov

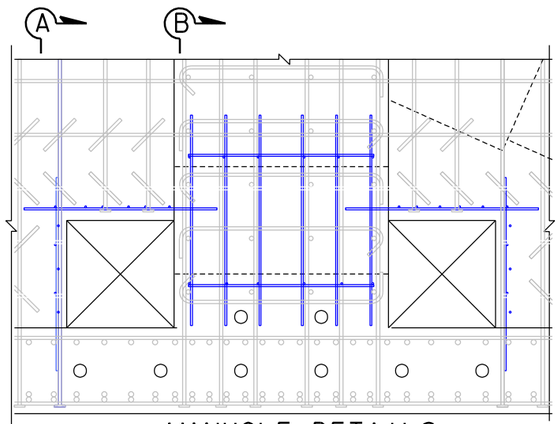

MANHOLE DETAILS

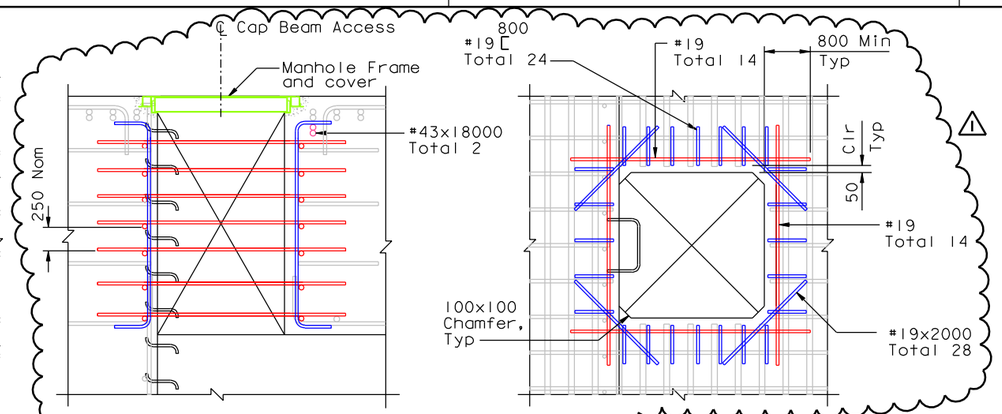

ALTERNATE MANHOLE DETAILS

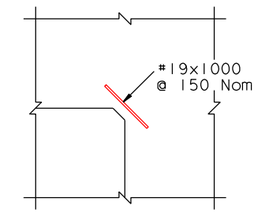

CORNER BAR DETAIL
(Upper cap beam void region)

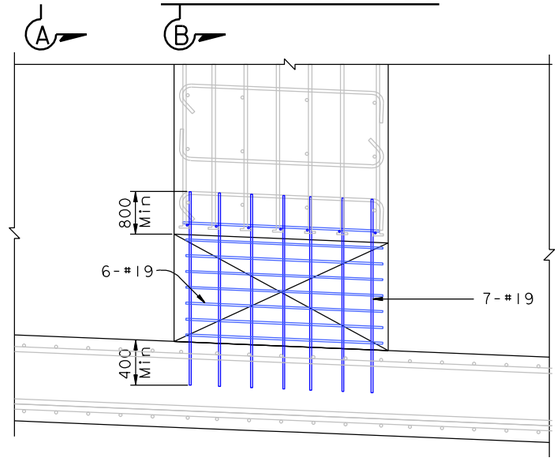

VIEW A-A

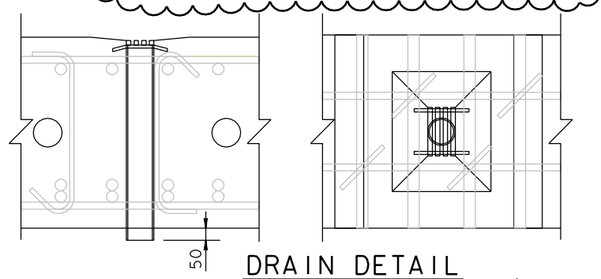

DRAIN DETAIL

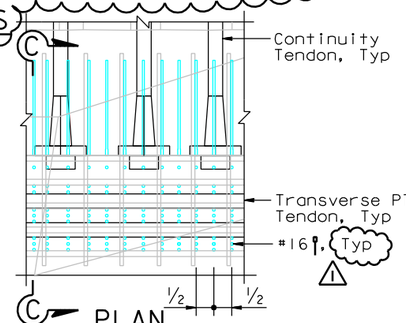

C PLAN
(Continuity Tendons 1A-13A & 30A-33A)

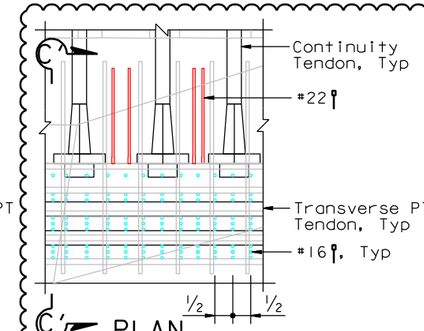

C' PLAN
(Continuity Tendons 14A-29A)

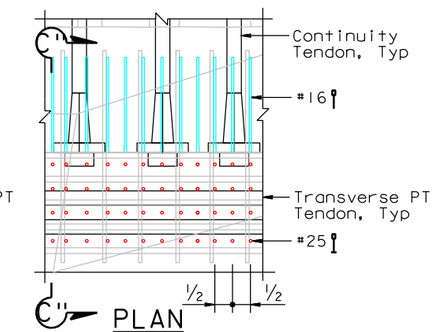

C'' PLAN
(Continuity Tendons 34A-42A)

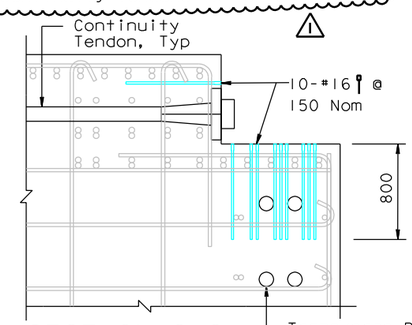

SECTION C-C

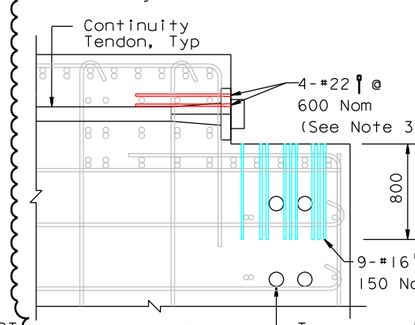

SECTION C'-C'

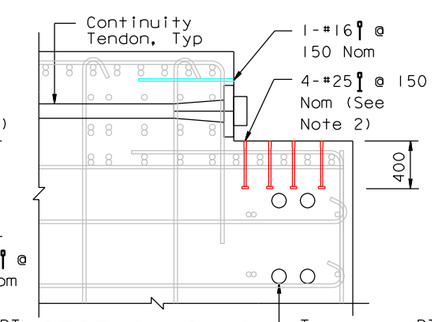

SECTION C''-C''

JOINT REINFORCEMENT DETAILS

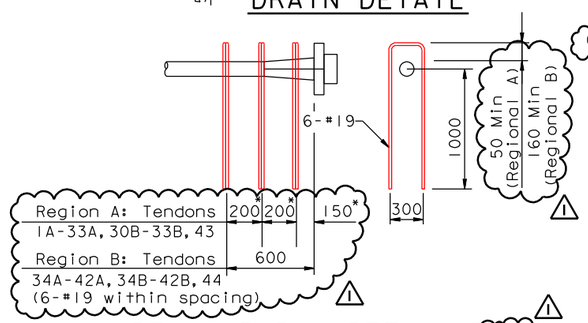

PT HAIR PIN DETAIL (*±50)
(NTS)

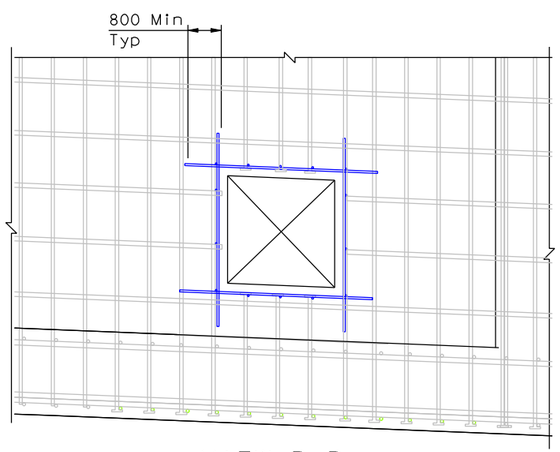

VIEW B-B

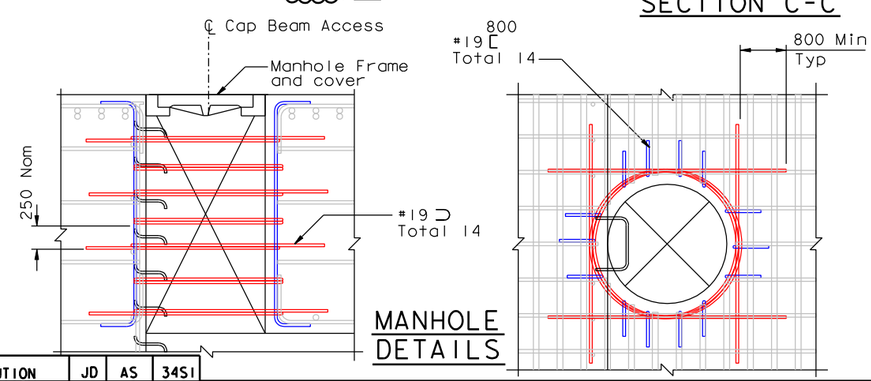

MANHOLE DETAILS

NOTES:

1. Manhole frame and cover shall be cast iron. Complete assembly shall be galvanized after fabrication. Cover shall be supplied with bolt down or locking devices.
2. At locations where 4-#25 vertical bars cannot be placed in the same row, it is acceptable to relocate #25 bars to adjacent rows; provided the same number of bars within the region is maintained.
3. At locations where the spacing between Continuity Tendons is 500 mm, it is acceptable to place 2-#22 (1 above and 1 below Layer 2 of the Top Mat reinforcement).

ALL DIMENSIONS ARE IN MILLIMETERS UNLESS OTHERWISE SHOWN

MARK	DATE	DESCRIPTIONS	BY	CH'D	CCO#
1	05/04/07	W2 CAP BEAM ISD RESOLUTION	JD	AS	34S1
0	07/21/06	W2 CAP BEAM ISD	JD	AS	23

REVISIONS

CONTRACT CHANGE ORDER NO. ____
SHEET ____ OF ____

R. Valizadeh/V. Toan/Y.L./W.L./F.C.
DESIGN OVERSIGHT
SIGN OFF DATE 05/04/07

Rev. Date: 5-18-98

	BY	CHECKED
DESIGN	J. Duxbury	A. Sanjines
DETAILS	J. Duxbury	A. Sanjines
QUANTITIES	N. Vo	J. Duxbury

ORIGINAL SCALE IN MILLIMETERS FOR REDUCED PLANS 0 10 20 30 40 50 60 70 80 90 100

PREPARED FOR THE STATE OF CALIFORNIA DEPARTMENT OF TRANSPORTATION

R. Manzanarez
PROJECT ENGINEER

CU 04
EA 0120F1

BRIDGE NO. 34-0006L/R
KILOMETER POST 13.2/13.9

DISREGARD PRINTS BEARING EARLIER REVISION DATES 07/21/06

SAN FRANCISCO OAKLAND BAY BRIDGE
EAST SPAN SEISMIC SAFETY PROJECT
SELF-ANCHORED SUSPENSION BRIDGE
(SUPERSTRUCTURE & TOWER)

W2 CAP BEAM REINFORCEMENT DETAILS NO. 48

REVISION DATES (PRELIMINARY STAGE ONLY) | SHEET 080S24R1 | OF

FILE => I:\bb\04-0120I\sas\contract plans and cco\cco\in progress\cco#34s1\aecap47r-s.dgn

USERNAME => ptom DATE PLOTTED => 09 MAY 2007 TIME PLOTTED => 15:52:52

100% PS&E