DIST.	COUNTY	ROUTE	KILOMETER POST TOTAL PROJECT	SHEET NO.	TOTAL SHEETS
04	SF	80	13.2/13.9	456R2	1204

Caltrans Metric

REGISTERED ENGINEER - CIVIL

12-6-04
PLANS APPROVAL DATE

REGISTERED PROFESSIONAL ENGINEER — John Sun — No. C 54648 — Exp. 12/31/05 — CIVIL — STATE OF CALIFORNIA

The State of California or its officers or agents shall not be responsible for the accuracy or completeness of electronic copies of this plan sheet.

T.Y. LIN / MOFFATT & NICHOL
825 BATTERY STREET
SAN FRANCISCO, CA 94111

Caltrans now has a web site! To get to the web site, go to: http://www.dot.ca.gov

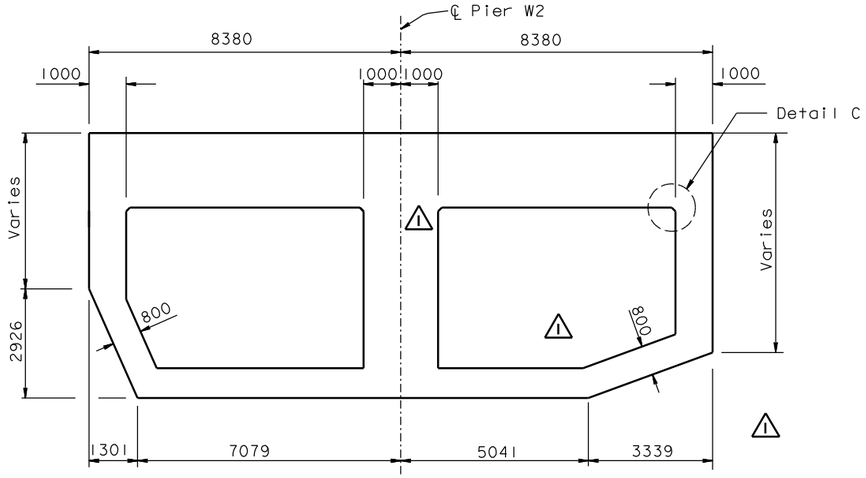

SECTION C-C
1:80

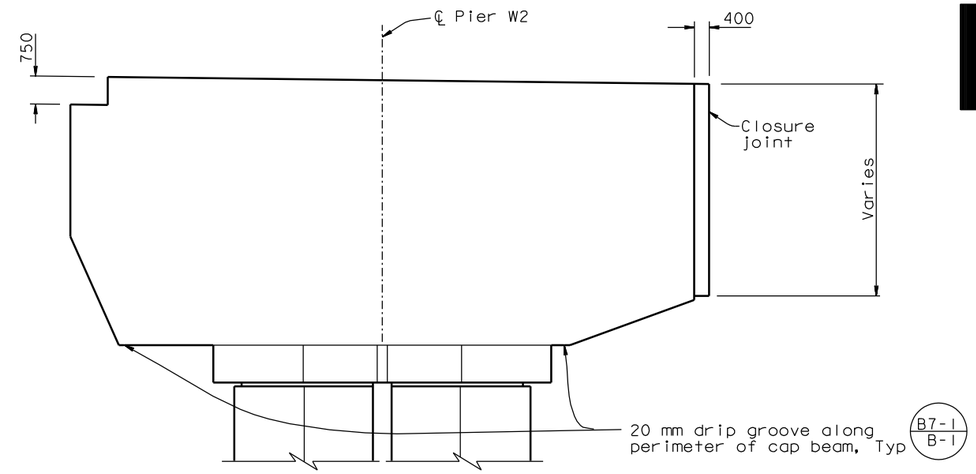

SECTION F-F
1:80

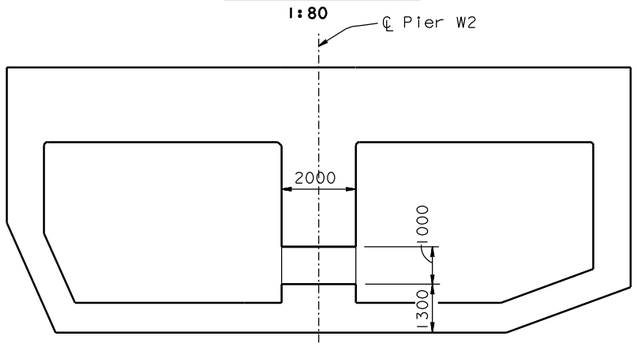

SECTION D-D
1:80

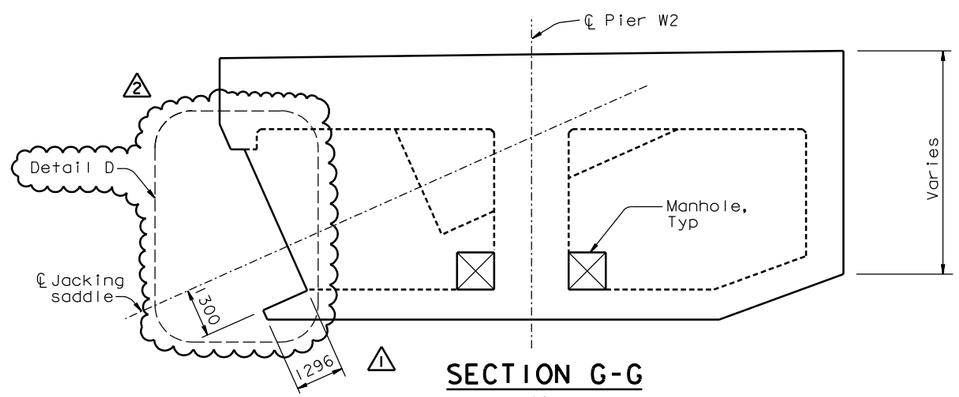

SECTION G-G
1:80

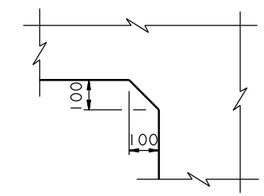

TYPICAL CHAMFER DETAIL

DETAIL C
1:10

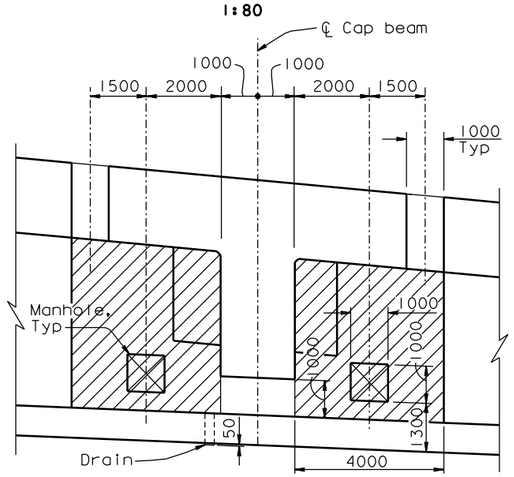

SECTION E-E
1:80

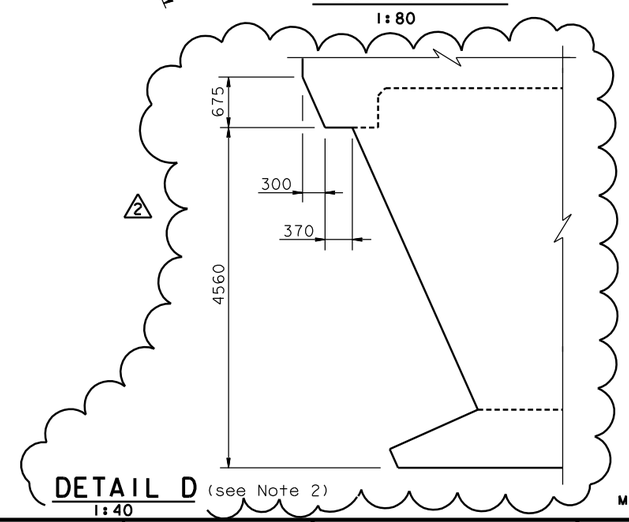

DETAIL D (see Note 2)
1:40

ALL DIMENSIONS ARE IN MILLIMETERS UNLESS OTHERWISE SHOWN

REGISTERED PROFESSIONAL ENGINEER — James P. Duxbury — No. C 64677 — Exp. 06/30/07 — CIVIL — STATE OF CALIFORNIA

FOR REVISIONS ONLY

MARK	DATE	DESCRIPTIONS	BY	CH'D	CCO#
2	05/04/07	W2 CAP BEAM ISD RESOLUTION	JD	AS	34S1
1	07/21/06	W2 CAP BEAM ISD	JD	NV	23

REVISIONS

CONTRACT CHANGE ORDER NO. ____
SHEET ___ OF ___

LEGEND:

All forms to be removed after construction of W2 cap beam deck.

NOTES:

1. For additional details, see "W2 Cap Beam Dimension Details No. 1" sheet.
2. For additional Jacking Frame Opening details, see "W2 Cap Beam Dimension Details No. 4" sheet.

100 % PS&E

DATE PLOTTED => 10 MAY 2007 TIME PLOTTED => 12:09:44

USERNAME => ptom

R. Valizadeh/V. Toan/Y.L./W.L./F.C.
DESIGN OVERSIGHT
SIGN OFF DATE 05/04/07

Rev. Date: 5-18-98

	BY	CHECKED	
DESIGN	J. Sun	M. Chen	
DETAILS	S. Shi	M. Chen	
QUANTITIES	S. Shi	D. Harrison	

PREPARED FOR THE STATE OF CALIFORNIA DEPARTMENT OF TRANSPORTATION

R. Manzanarez
PROJECT ENGINEER

BRIDGE NO. 34-0006L/R
KILOMETER POST 13.2/13.9

SAN FRANCISCO OAKLAND BAY BRIDGE
EAST SPAN SEISMIC SAFETY PROJECT
SELF-ANCHORED SUSPENSION BRIDGE
(SUPERSTRUCTURE & TOWER)

W2 CAP BEAM DIMENSION DETAILS NO. 3

ORIGINAL SCALE IN MILLIMETERS FOR REDUCED PLANS 0 10 20 30 40 50 60 70 80 90 100

CU 04
EA 0120F1

DISREGARD PRINTS BEARING EARLIER REVISION DATES

REVISION DATES (PRELIMINARY STAGE ONLY) 05/15/99 08/02/99 05/31/01 04/08/02 07/01/02 12/19/02

SHEET 039R2 OF

FILE => I:\bb\04-012001\sas\contract plans and cco\cco\in progress\cco#34s1\oecap03.dgn

DIST.	COUNTY	ROUTE	KILOMETER POST TOTAL PROJECT	SHEET NO.	TOTAL SHEETS
04	SF	80	13.2/13.9	457R2	1204

Caltrans Metric

REGISTERED ENGINEER - CIVIL

12-6-04
PLANS APPROVAL DATE

REGISTERED PROFESSIONAL ENGINEER John Sun No. C 54648 Exp. 12/31/05 CIVIL STATE OF CALIFORNIA

The State of California or its officers or agents shall not be responsible for the accuracy or completeness of electronic copies of this plan sheet.

T.Y. LIN / MOFFATT & NICHOL
825 BATTERY STREET
SAN FRANCISCO, CA 94111

Caltrans now has a web site! To get to the web site, go to: http://www.dot.ca.gov

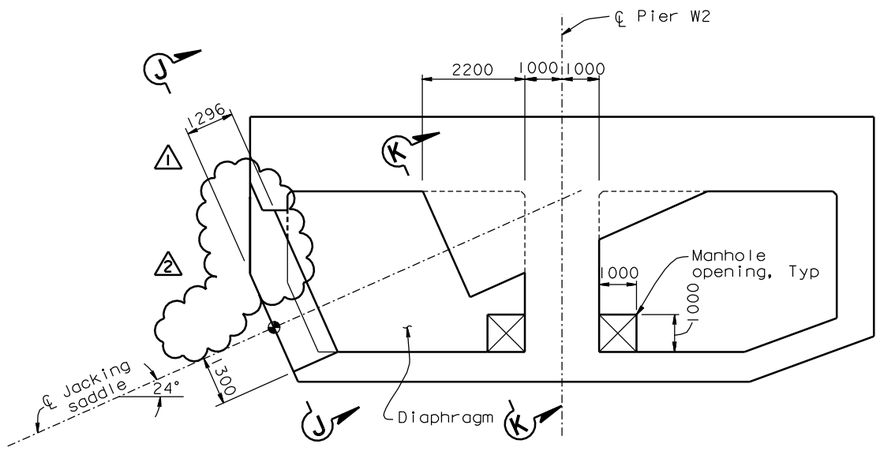

Stage 1

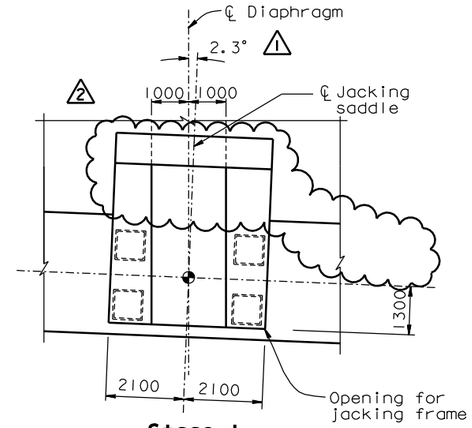

Stage 1

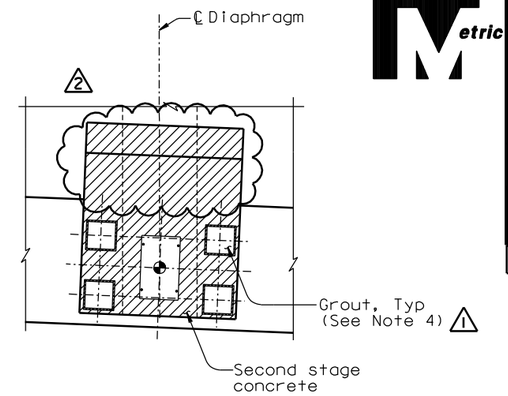

Stage 2

SECTION J-J
1:80

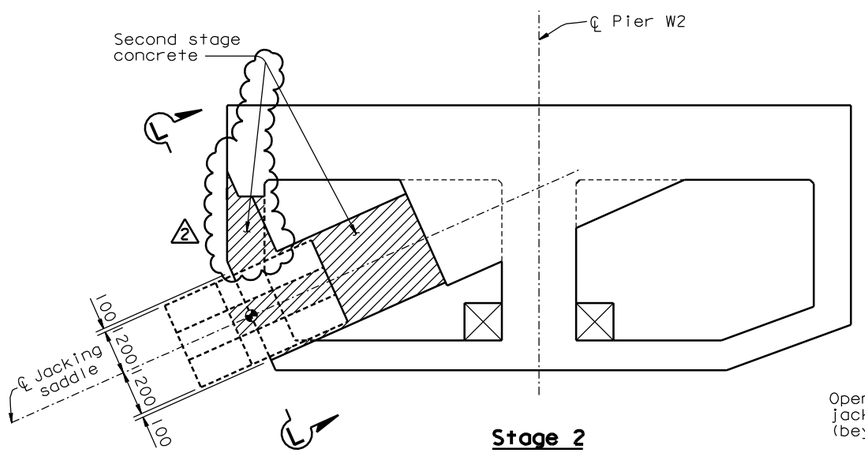

Stage 2

SECTION H-H
1:80

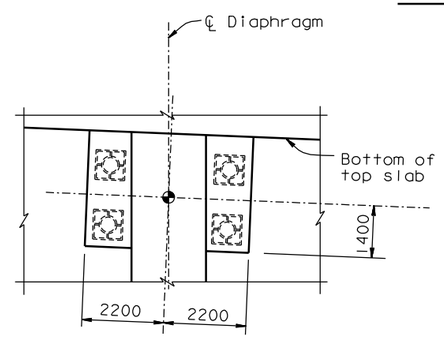

Stage 1

SECTION K-K
1:80

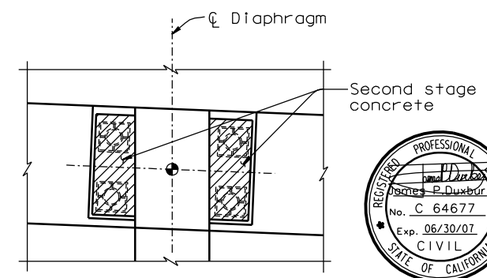

Stage 2

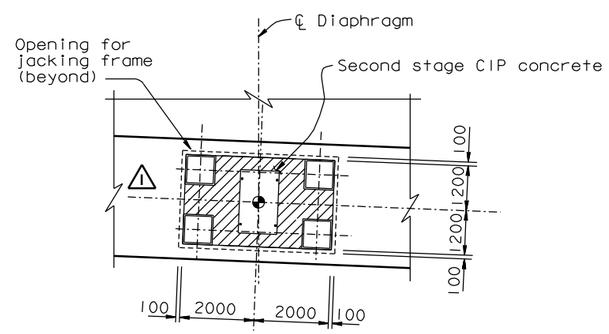

Stage 2

SECTION L-L
1:80

PROFESSIONAL ENGINEER Jason P. Duxbury No. C 64677 Exp. 06/30/07 CIVIL STATE OF CALIFORNIA

FOR REVISIONS ONLY

MARK	DATE	DESCRIPTIONS	BY	CH'D	CCO#
2	05/04/07	W2 CAP BEAM ISD RESOLUTION	JD	AS	34S1
1	07/21/06	W2 CAP BEAM ISD, GROUT LEGS	JD	NV	23

REVISIONS

CONTRACT CHANGE ORDER NO. ____
SHEET ___ OF ___

NOTES:

1. For additional details, see "W2 Cap Beam Dimension Details No.1" sheet.
2. Jacking saddle and jacking frame not shown for clarity.
3. Stage 1: W2 Cap Beam construction is complete; main cable jacking has not started.

   Stage 2: Main cable jacking is complete and Stage 2 concrete poured.
4. (1) After all jacking operations have been completed and before the Stage 2 concrete is poured, the Jacking Frame support legs shall be filled with high strength nonshrink grout (f'c=60 MPa). Grouting details shall be submitted to the Engineer for review and approval.
5. (2) For additional Jacking Frame opening details, see "W2 Cap Beam Dimension Details No.3" sheet.

100% PS&E

ALL DIMENSIONS ARE IN MILLIMETERS UNLESS OTHERWISE SHOWN

SAN FRANCISCO OAKLAND BAY BRIDGE
EAST SPAN SEISMIC SAFETY PROJECT
SELF-ANCHORED SUSPENSION BRIDGE
(SUPERSTRUCTURE & TOWER)

W2 CAP BEAM DIMENSION DETAILS NO. 4

R. Valizadeh/V. Toan/Y.L./W.L./F.C.
DESIGN OVERSIGHT
SIGN OFF DATE 05/04/07

	BY	CHECKED
DESIGN	J. Sun	M. Chen
DETAILS	S. Shi	M. Chen
QUANTITIES	S. Shi	D. Harrison

PREPARED FOR THE STATE OF CALIFORNIA DEPARTMENT OF TRANSPORTATION

R. Manzanarez
PROJECT ENGINEER

BRIDGE NO. 34-0006L/R
KILOMETER POST 13.2/13.9

CU 04
EA 0120F1

DISREGARD PRINTS BEARING EARLIER REVISION DATES

REVISION DATES (PRELIMINARY STAGE ONLY): 05/31/01 04/08/02 07/01/02 12/19/02

SHEET 040R2 OF

Rev. Date: 5-18-98

ORIGINAL SCALE IN MILLIMETERS FOR REDUCED PLANS 0 10 20 30 40 50 60 70 80 90 100

FILE => I:\bb\04-012001\sas\contract plans and cco\cco\in progress\cco#34s1\aecap03a.dgn

USERNAME => ptom DATE PLOTTED => 10 MAY 2007 TIME PLOTTED => 12:10:42

Caltrans now has a web site! To get to the web site, go to: http://www.dot.ca.gov

DIST.	COUNTY	ROUTE	KILOMETER POST TOTAL PROJECT	SHEET NO.	TOTAL SHEETS
04	SF	80	13.2/13.9	462R3	1204

MARK	DATE	DESCRIPTIONS	BY	CH'D	CCO#
3	05/04/07	W2 CAP BEAM ISD RESOLUTION	JD	AS	34S1
2	01/31/07	CORROSION PROTECTION	JD	AS	16
1	07/21/06	W2 CAP BEAM ISD	JD	NV	23

REVISIONS

CONTRACT CHANGE ORDER NO. ____
SHEET ___ OF ___

FOR REVISIONS ONLY

REGISTERED PROFESSIONAL ENGINEER James P. Duxbury No. C 64677 Exp. 06/30/07 CIVIL STATE OF CALIFORNIA

Caltrans Metric

REGISTERED ENGINEER - CIVIL

12-6-04
PLANS APPROVAL DATE

REGISTERED PROFESSIONAL ENGINEER John Sun No. C 54648 Exp. 12/31/05 CIVIL STATE OF CALIFORNIA

The State of California or its officers or agents shall not be responsible for the accuracy or completeness of electronic copies of this plan sheet.

T.Y. LIN / MOFFATT & NICHOL
825 BATTERY STREET
SAN FRANCISCO, CA 94111

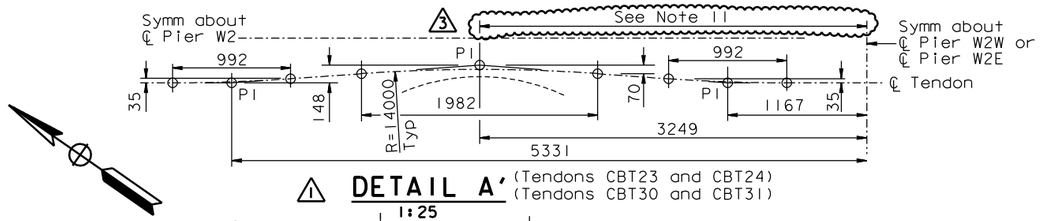

DETAIL A' (Tendons CBT23 and CBT24) (Tendons CBT30 and CBT31)
1:25

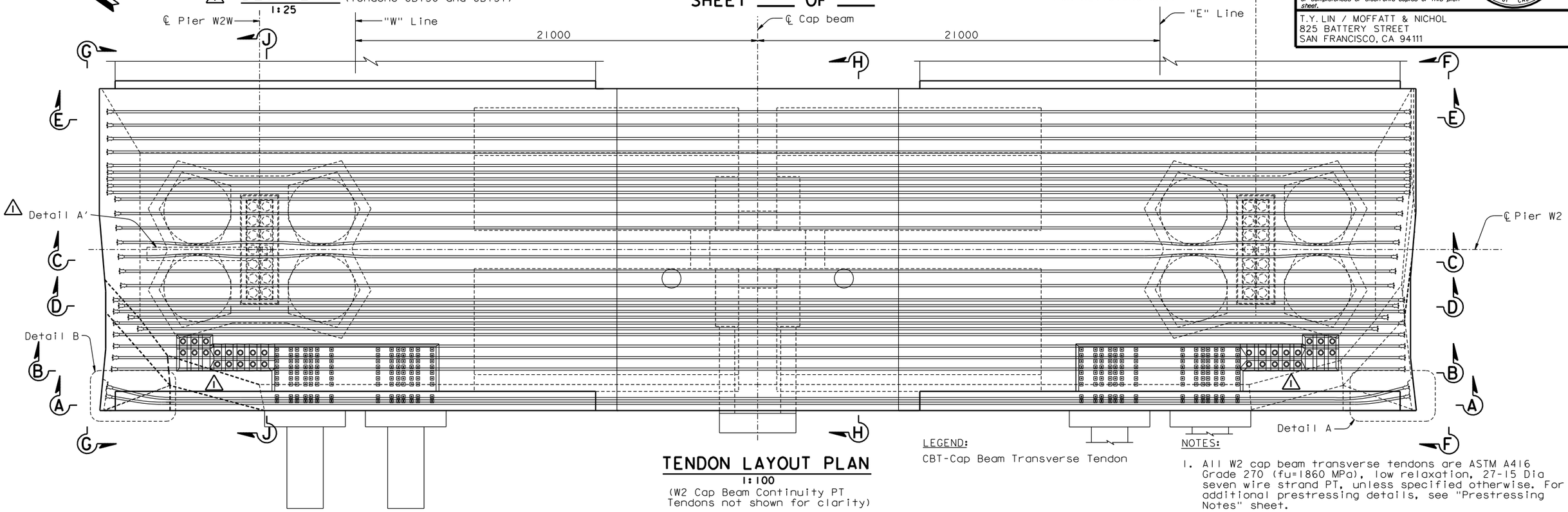

TENDON LAYOUT PLAN
1:100
(W2 Cap Beam Continuity PT Tendons not shown for clarity)

LEGEND:
CBT-Cap Beam Transverse Tendon

NOTES:

1. All W2 cap beam transverse tendons are ASTM A416 Grade 270 (fu=1860 MPa), low relaxation, 27-15 Dia seven wire strand PT, unless specified otherwise. For additional prestressing details, see "Prestressing Notes" sheet.
2. For Section A-A, see "W2 Cap Beam Post-Tensioning Details No.2" sheet.
3. For Sections B-B through E-E, see "W2 Cap Beam Post-Tensioning Details No.3" sheet.
4. For Sections F-F through J-J, see "W2 Cap Beam Post-Tensioning Details No.4" sheet.
5. For bikepath details near cap beam, see "Bikepath Details" sheets.
6. For PT blockout dimensions, see "W2 Cap Beam Blockout Details" sheets.
7. Jacking force in the W2 cap beam transverse tendons (CBT1-CBT36) shall be 5265 kN typical.
8. For general stressing sequence, see "Pier W2 Construction Sequence" sheet.
9. For "W2 Cap Beam Post-Tensioning Details" sheets, the Contractor shall verify all controlling field dimensions before ordering or fabricating any material.

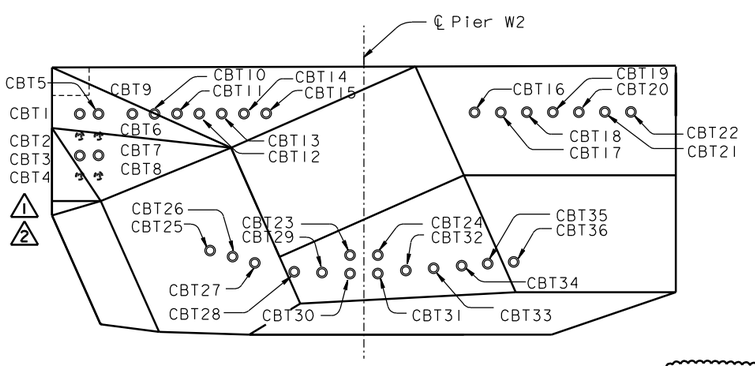

TENDON DESIGNATION
1:80

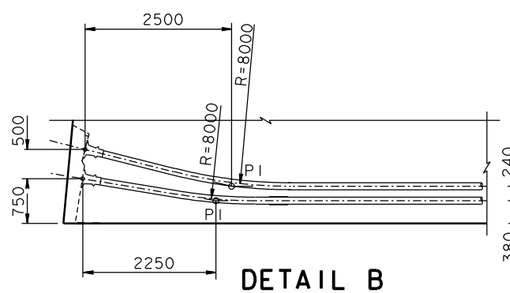

DETAIL B
1:50
(Tendons CBT1 and CBT5)
(Tendons CBT2 thru CBT8 similar)

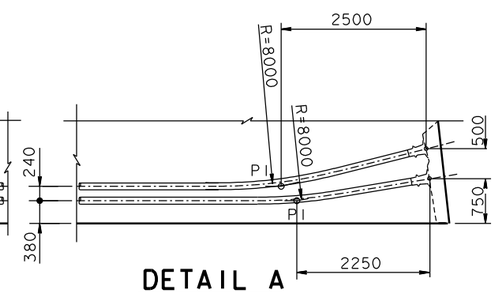

DETAIL A
1:50
(Tendons CBT1 and CBT5)
(Tendons CBT2 thru CBT8 similar)

11. At the Contractor's option, the tendon profile may be straightened, subject to review and approval of the Engineer.

10. W2 cap beam elevations are to top of finished concrete and do not include overlay thickness.

ALL DIMENSIONS ARE IN MILLIMETERS UNLESS OTHERWISE SHOWN

SAN FRANCISCO OAKLAND BAY BRIDGE
EAST SPAN SEISMIC SAFETY PROJECT
SELF-ANCHORED SUSPENSION BRIDGE
(SUPERSTRUCTURE & TOWER)

W2 CAP BEAM POST-TENSIONING DETAILS NO. 1

R. Valizadeh/V. Toan/Y.L./W.L./F.C.
DESIGN OVERSIGHT
SIGN OFF DATE 05/04/07

Rev. Date: 5-18-98

DESIGN	BY J. Sun	CHECKED M. Chen	
DETAILS	BY J. Duxbury	CHECKED M. Chen	
QUANTITIES	BY S. Shi	CHECKED D. Harrison	

PREPARED FOR THE STATE OF CALIFORNIA DEPARTMENT OF TRANSPORTATION

R. Manzanarez
PROJECT ENGINEER

BRIDGE NO. 34-0006L/R
KILOMETER POST 13.2/13.9

CU 04
EA 0120F1

ORIGINAL SCALE IN MILLIMETERS FOR REDUCED PLANS 0 10 20 30 40 50 60 70 80 90 100

DISREGARD PRINTS BEARING EARLIER REVISION DATES

REVISION DATES (PRELIMINARY STAGE ONLY) 08/06/99 05/31/01 04/08/02 07/01/02 12/19/02

SHEET 045R3 OF

FILE => I:\bb\04-012001\sas\contract plans and cco\cco\in progress\cco#34s1\decpt01.dgn

100% PS&E

DATE PLOTTED => 22 MAY 2007 TIME PLOTTED => 12:25:14

USERNAME => ptom

DIST.	COUNTY	ROUTE	KILOMETER POST TOTAL PROJECT	SHEET NO.	TOTAL SHEETS
04	SF	80	13.2/13.9	463R3	1204

REGISTERED ENGINEER - CIVIL

12-6-04
PLANS APPROVAL DATE

REGISTERED PROFESSIONAL ENGINEER John Sun No. C 54648 Exp. 12/31/05 CIVIL STATE OF CALIFORNIA

The State of California or its officers or agents shall not be responsible for the accuracy or completeness of electronic copies of this plan sheet.

T.Y. LIN / MOFFATT & NICHOL
825 BATTERY STREET
SAN FRANCISCO, CA 94111

Caltrans now has a web site! To get to the web site, go to: http://www.dot.ca.gov

REGISTERED PROFESSIONAL ENGINEER Jason Duxbury No. C 64677 Exp. 06/30/07 CIVIL STATE OF CALIFORNIA

FOR REVISIONS ONLY

MARK	DATE	DESCRIPTIONS	BY	CH'D	CCO#
3	05/04/07	W2 CAP BEAM ISD RESOLUTION	JD	AS	3451
2	01/31/07	CORROSION PROTECTION	JD	AS	16
1	07/21/06	W2 CAP BEAM ISD	JD	NV	23

REVISIONS

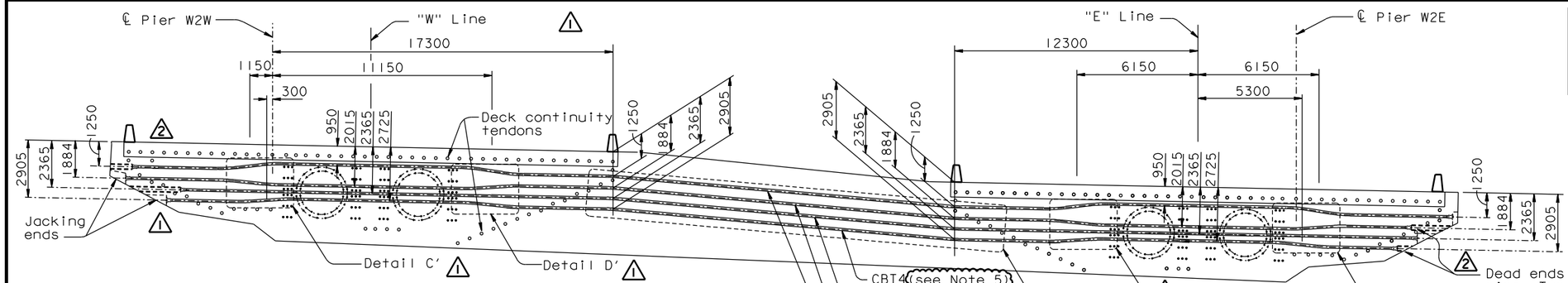

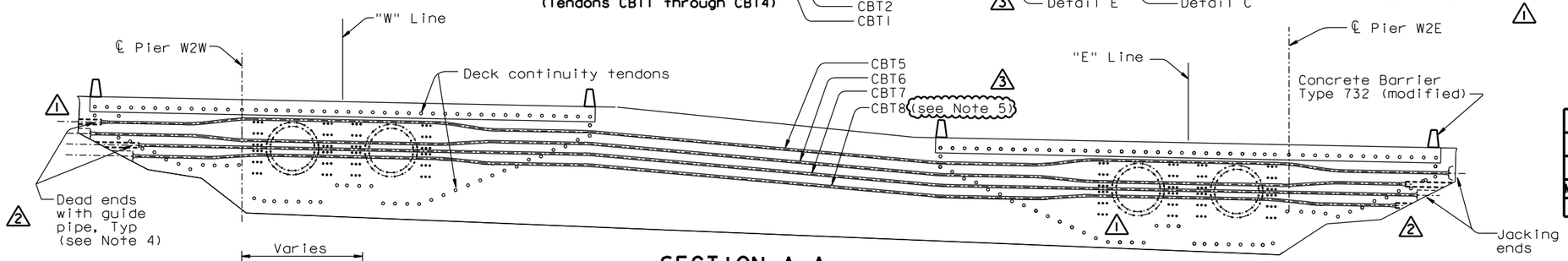

SECTION A-A
1:125

(For Tendons CBT5 through CBT8 dimensions, see Tendon CBT1 through CBT4 dimensions)

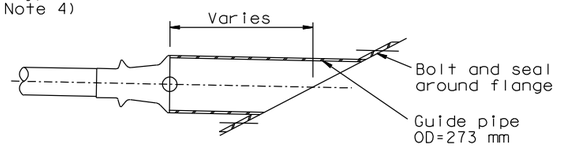

DEAD END GUIDE PIPE
NTS (see Note 4)

NOTES:

5. CBT ducts 4 and 8 may be spliced through Jacking Frame Blocking Installation Blockout. For Jacking Frame opening details, see "W2 Cap Beam Dimension Details No. 3" sheet.

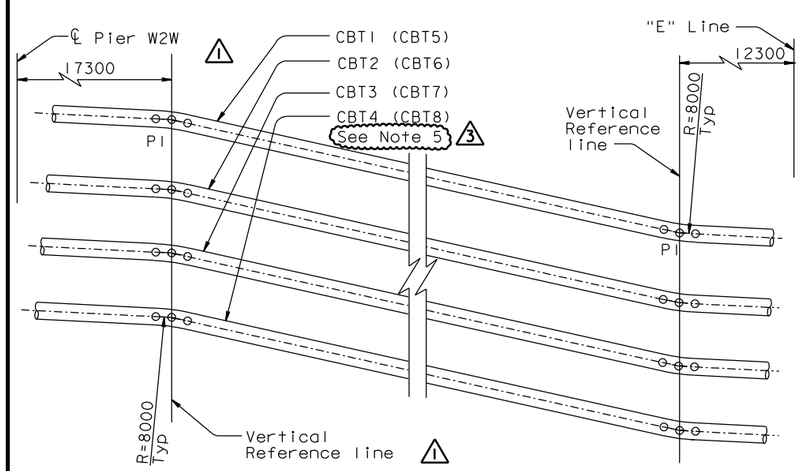

DETAIL E
NTS

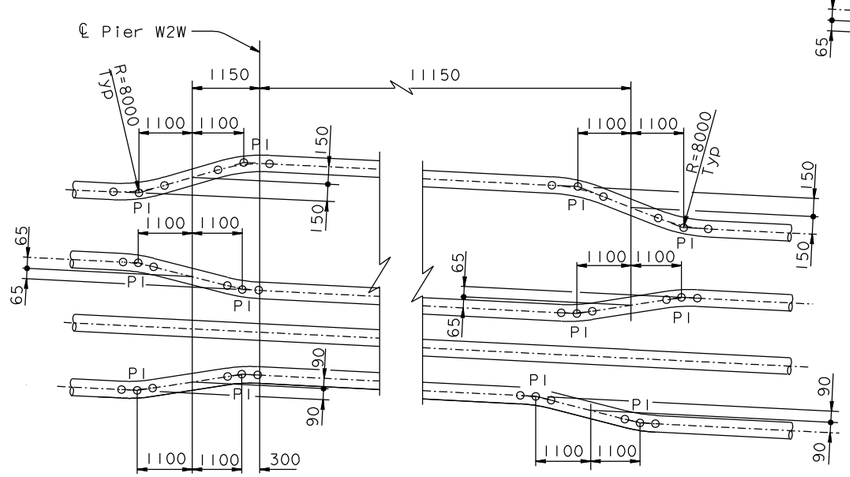

DETAIL C'
NTS

DETAIL D'
NTS

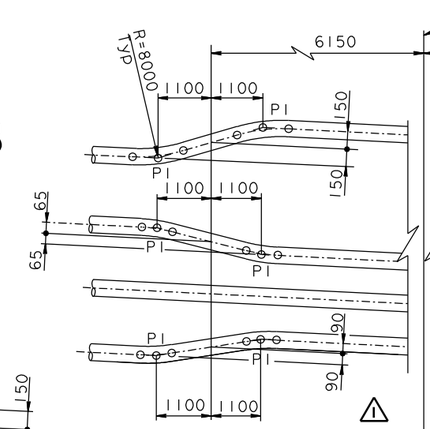

DETAIL C
NTS

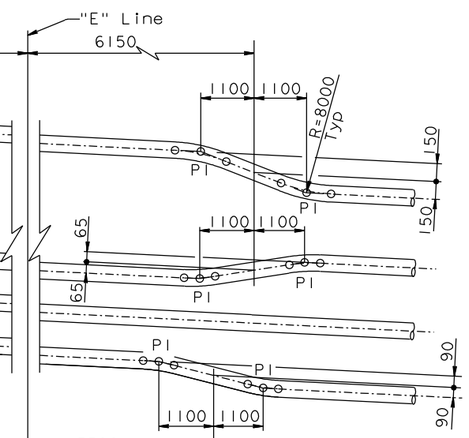

DETAIL D
NTS

NOTES:

1. For additional details, see "W2 Cap Beam Post-Tensioning Details No.1" sheet.
2. For PT blockout details, see "W2 Cap Beam Blockout Details" sheets.
3. For deck continuity tendon details, see "W2 Cap Beam Post-Tensioning Details No.5" through "W2 Cap Beam Post-Tensioning Details No.12" sheets.
4. Contractor shall coordinate the dead end guide pipe details with the PT System Supplier and shall submit them to the Engineer for review and approval. Contractor shall grout the guide pipe after stressing operations have been completed.

ALL DIMENSIONS ARE IN MILLIMETERS UNLESS OTHERWISE SHOWN

R. Valizadeh/V. Toan/Y.L./W.L./F.C.
DESIGN OVERSIGHT
Roya Valizadeh / Vang Toan / Y. Liu
SIGN OFF DATE 05/04/07

	BY	CHECKED
DESIGN	J. Sun	M. Chen
DETAILS	J. Duxbury	M. Chen
QUANTITIES	S. Shi	D. Harrison

PREPARED FOR THE STATE OF CALIFORNIA DEPARTMENT OF TRANSPORTATION

R. Manzanarez
PROJECT ENGINEER

BRIDGE NO. 34-0006L/R
KILOMETER POST 13.2/13.9

SAN FRANCISCO OAKLAND BAY BRIDGE
EAST SPAN SEISMIC SAFETY PROJECT
SELF-ANCHORED SUSPENSION BRIDGE
(SUPERSTRUCTURE & TOWER)

W2 CAP BEAM POST-TENSIONING DETAILS NO.2

Rev. Date: 5-18-98

ORIGINAL SCALE IN MILLIMETERS FOR REDUCED PLANS 0 10 20 30 40 50 60 70 80 90 100

CU 04
EA 0120F1

DISREGARD PRINTS BEARING EARLIER REVISION DATES

REVISION DATES (PRELIMINARY STAGE ONLY) 08/07/99 05/31/01 04/08/02 07/01/02 12/19/02

SHEET 046R3 OF

100 % PS&E

DATE PLOTTED => 22 MAY 2007 TIME PLOTTED => 12:10:55

USERNAME => ptom

FILE => I:\bb\04-012001\sas\contract plans and cco\cco\in progress\cco#3451\aecpt02.dgn

DIST.	COUNTY	ROUTE	KILOMETER POST TOTAL PROJECT	SHEET NO.	TOTAL SHEETS
04	SF	80	13.2/13.9	465R2	1204

Caltrans Metric

REGISTERED ENGINEER - CIVIL

12-6-04
PLANS APPROVAL DATE

REGISTERED PROFESSIONAL ENGINEER John Sun No. C 54648 Exp. 12/31/05 CIVIL STATE OF CALIFORNIA

The State of California or its officers or agents shall not be responsible for the accuracy or completeness of electronic copies of this plan sheet.

T.Y. LIN / MOFFATT & NICHOL
825 BATTERY STREET
SAN FRANCISCO, CA 94111

Caltrans now has a web site! To get to the web site, go to: http://www.dot.ca.gov

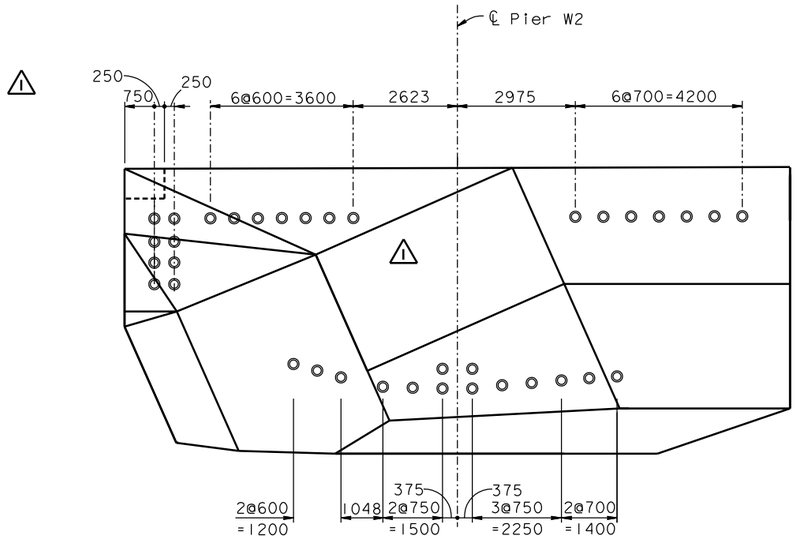

SECTION F-F
1:75

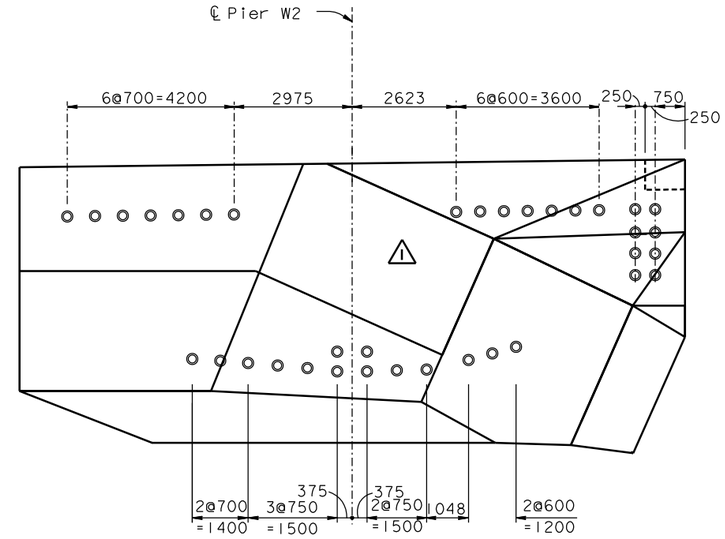

SECTION G-G
1:75

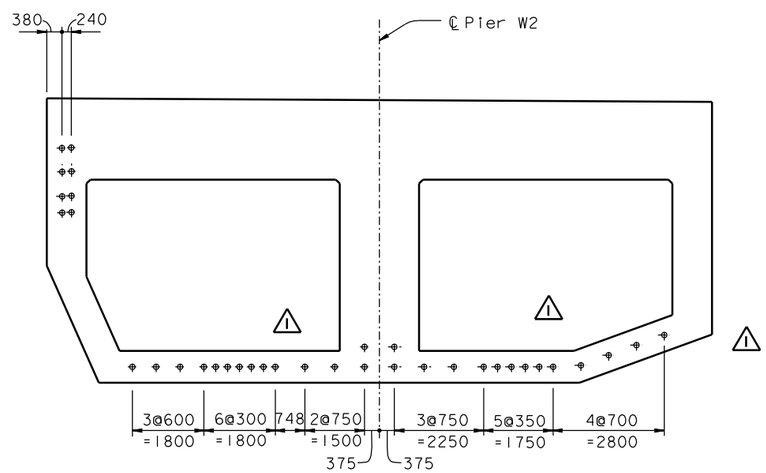

SECTION H-H
1:75

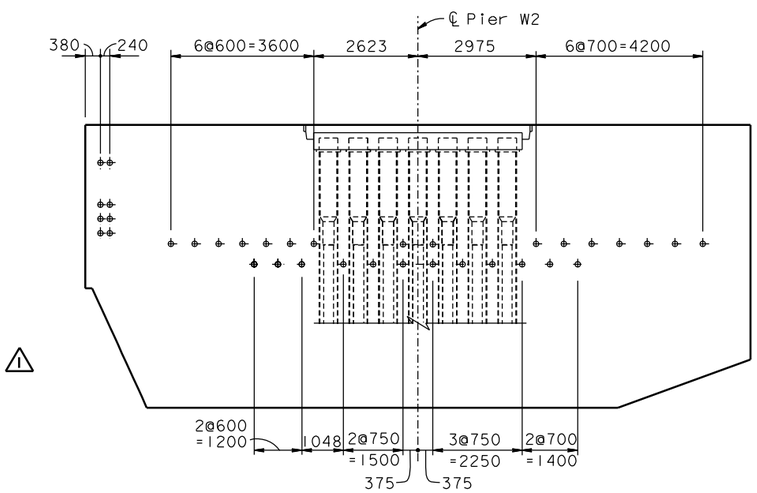

SECTION J-J (see Note 3)
1:75

NOTES:

1. For additional details, see "W2 Cap Beam Post-Tensioning Details No.1" sheet.
2. For PT blockout details, see "W2 Cap Beam Blockout Details" sheets.
3. Alignment of CBT 23,24,30 and 31 may differ from that shown on Section J-J; see "W2 Cap Beam Post-Tensioning Details No.1" sheet.

REGISTERED PROFESSIONAL ENGINEER James P. Duxbury No. C 64677 Exp. 06/30/07 CIVIL STATE OF CALIFORNIA

FOR REVISIONS ONLY

MARK	DATE	DESCRIPTIONS	BY	CH'D	CCO#
2	05/04/07	W2 CAP BEAM ISD RESOLUTION	JD	AS	34S1
1	07/21/06	W2 CAP BEAM ISD	JD	NV	23

REVISIONS

CONTRACT CHANGE ORDER NO. ____
SHEET ___ OF ___

100% PS&E

ALL DIMENSIONS ARE IN MILLIMETERS UNLESS OTHERWISE SHOWN

R. Valizadeh/V. Toan/Y.L./W.L./F.C.
DESIGN OVERSIGHT
SIGN OFF DATE 05/04/07

	BY	CHECKED
DESIGN	J. Sun	M. Chen
DETAILS	J. Duxbury	M. Chen
QUANTITIES	S. Shi	D. Harrison

PREPARED FOR THE STATE OF CALIFORNIA DEPARTMENT OF TRANSPORTATION

R. Manzanarez
PROJECT ENGINEER

BRIDGE NO. 34-0006L/R
KILOMETER POST 13.2/13.9

SAN FRANCISCO OAKLAND BAY BRIDGE
EAST SPAN SEISMIC SAFETY PROJECT
SELF-ANCHORED SUSPENSION BRIDGE
(SUPERSTRUCTURE & TOWER)

W2 CAP BEAM POST-TENSIONING DETAILS NO.4

Rev. Date: 5-18-98

ORIGINAL SCALE IN MILLIMETERS FOR REDUCED PLANS 0 10 20 30 40 50 60 70 80 90 100

CU 04
EA 0120F1

DISREGARD PRINTS BEARING EARLIER REVISION DATES

REVISION DATES (PRELIMINARY STAGE ONLY) 08/06/99 05/31/01 04/08/02 07/01/02 12/19/02

SHEET 048R2 OF

FILE => I:\bb\04-01200I\sas\contract plans and cco\cco\in progress\cco#34s1\aecpt04.dgn

USERNAME => ptom DATE PLOTTED => 22 MAY 2007 TIME PLOTTED => 12:23:13

DIST.	COUNTY	ROUTE	KILOMETER POST TOTAL PROJECT	SHEET NO.	TOTAL SHEETS
04	SF	80	13.2/13.9	466R4	1204

REGISTERED ENGINEER - CIVIL

12-6-04
PLANS APPROVAL DATE

REGISTERED PROFESSIONAL ENGINEER John Sun No. C 54648 Exp. 12/31/05 CIVIL STATE OF CALIFORNIA

The State of California or its officers or agents shall not be responsible for the accuracy or completeness of electronic copies of this plan sheet.

T.Y. LIN / MOFFATT & NICHOL
825 BATTERY STREET
SAN FRANCISCO, CA 94111

Caltrans now has a web site! To get to the web site, go to: http://www.dot.ca.gov

Caltrans Metric

REGISTERED PROFESSIONAL ENGINEER James P. Duxbury No. C 64677 Exp. 06/30/07 CIVIL STATE OF CALIFORNIA
FOR REVISIONS ONLY

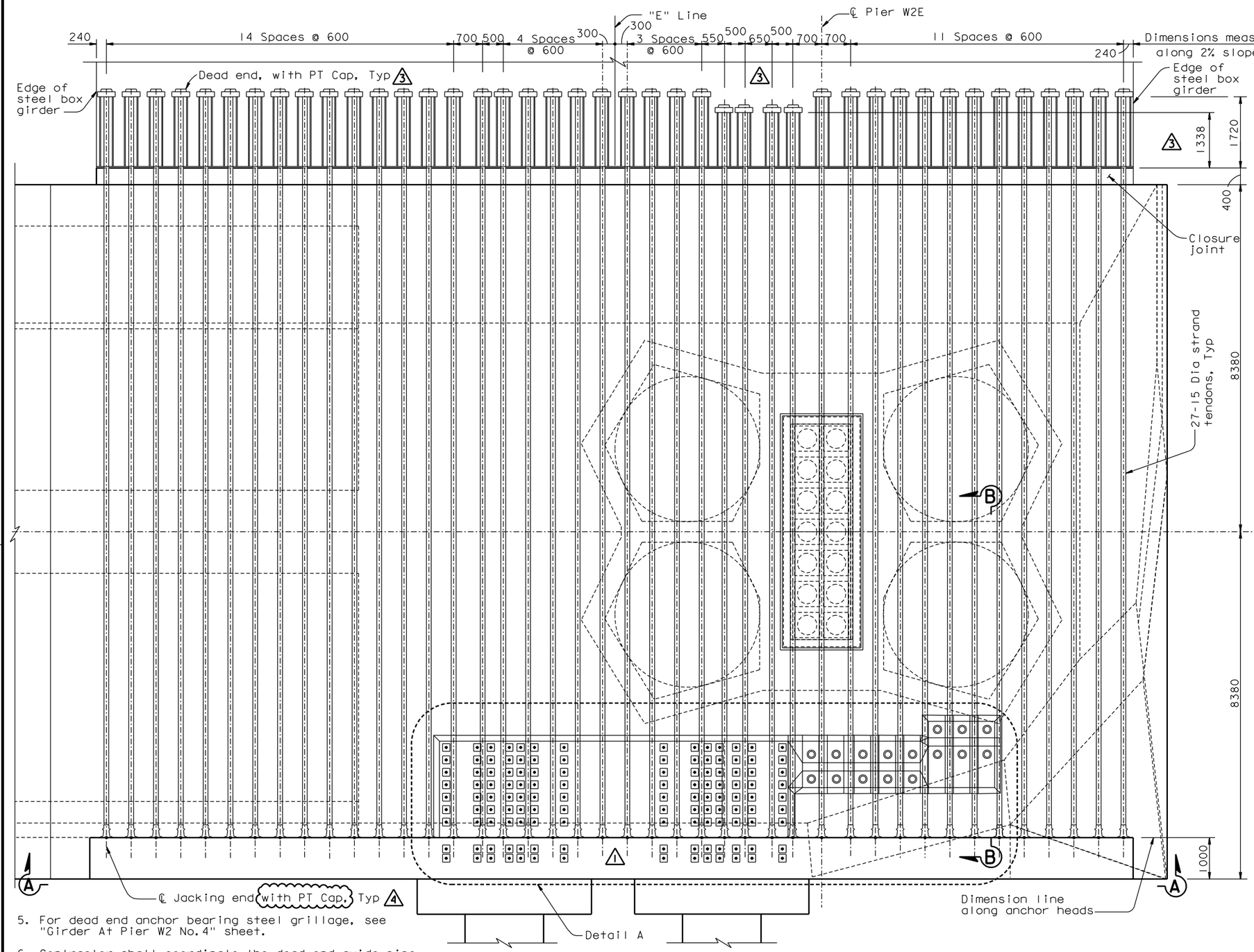

TOP TENDON LAYOUT PLAN ("E" Line)
1:50

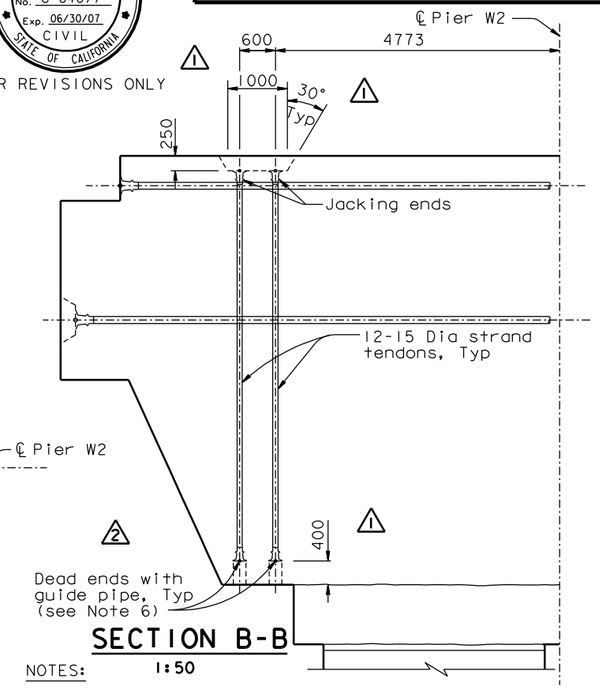

SECTION B-B
1:50

NOTES:

1. For Section A-A, see "W2 Cap Beam Post-Tensioning Details No.9" sheet.
2. For Detail A, see "W2 Cap Beam Post-Tensioning Details No.10" sheet.
3. All W2 cap beam continuity tendons are ASTM A416 Grade 270 (fu=1860 MPa), low relaxation, 27-15 Dia seven wire strand PT, unless specified otherwise. For additional prestressing details, see "Prestressing Notes" sheet.
4. For blockout details, see "W2 Cap Beam Blockout Details" sheets.
5. For dead end anchor bearing steel grillage, see "Girder At Pier W2 No.4" sheet.
6. Contractor shall coordinate the dead end guide pipe details with the PT System Supplier and shall submit them to the Engineer for review and approval. Contractor shall grout the guide pipe after stressing operations have been completed.

MARK	DATE	DESCRIPTIONS	BY	CH'D	CCO#
4	05/04/07	W2 CAP BEAM ISD RESOLUTION	JD	AS	34S1
3	02/16/07	BULKHEAD AT GIRDER PIER W2	JD	AS	27
2	01/31/07	CORROSION PROTECTION	JD	AS	16
1	07/21/06	W2 CAP BEAM ISD	JD	NV	23

REVISIONS

CONTRACT CHANGE ORDER NO. _____
SHEET ___ OF ___

100 % PS&E

ALL DIMENSIONS ARE IN MILLIMETERS UNLESS OTHERWISE SHOWN

SAN FRANCISCO OAKLAND BAY BRIDGE
EAST SPAN SEISMIC SAFETY PROJECT
SELF-ANCHORED SUSPENSION BRIDGE
(SUPERSTRUCTURE & TOWER)

W2 CAP BEAM POST-TENSIONING DETAILS NO.5

R. Valizadeh/V. Toan/Y.L./W.L./F.C.
DESIGN OVERSIGHT
SIGN OFF DATE 05/04/07

	BY	CHECKED
DESIGN	J. Sun	M. Chen
DETAILS	J. Duxbury	M. Chen
QUANTITIES	S. Shi	D. Harrison

PREPARED FOR THE STATE OF CALIFORNIA DEPARTMENT OF TRANSPORTATION

R. Manzanarez
PROJECT ENGINEER

BRIDGE NO. 34-0006L/R
KILOMETER POST 13.2/13.9

CU 04
EA 0120F1

Rev. Date: 5-18-98

ORIGINAL SCALE IN MILLIMETERS FOR REDUCED PLANS 0 10 20 30 40 50 60 70 80 90 100

DISREGARD PRINTS BEARING EARLIER REVISION DATES 08/08/99 05/31/01 04/08/02 07/01/02 12/19/02

SHEET 049R4 OF

FILE => I:\bb\04-012001\sas\contract plans and cco\cco\in progress\cco#34s1\aecpt05.dgn

USERNAME => ptom DATE PLOTTED => 22 MAY 2007 TIME PLOTTED => 16:10:22

DIST.	COUNTY	ROUTE	KILOMETER POST TOTAL PROJECT	SHEET NO.	TOTAL SHEETS
04	SF	80	13.2/13.9	468R4	1204

REGISTERED ENGINEER - CIVIL

12-6-04
PLANS APPROVAL DATE

REGISTERED PROFESSIONAL ENGINEER John Sun No. C 54648 Exp. 12/31/05 CIVIL STATE OF CALIFORNIA

The State of California or its officers or agents shall not be responsible for the accuracy or completeness of electronic copies of this plan sheet.

T.Y. LIN / MOFFATT & NICHOL
825 BATTERY STREET
SAN FRANCISCO, CA 94111

Caltrans now has a web site! To get to the web site, go to: http://www.dot.ca.gov

Caltrans Metric

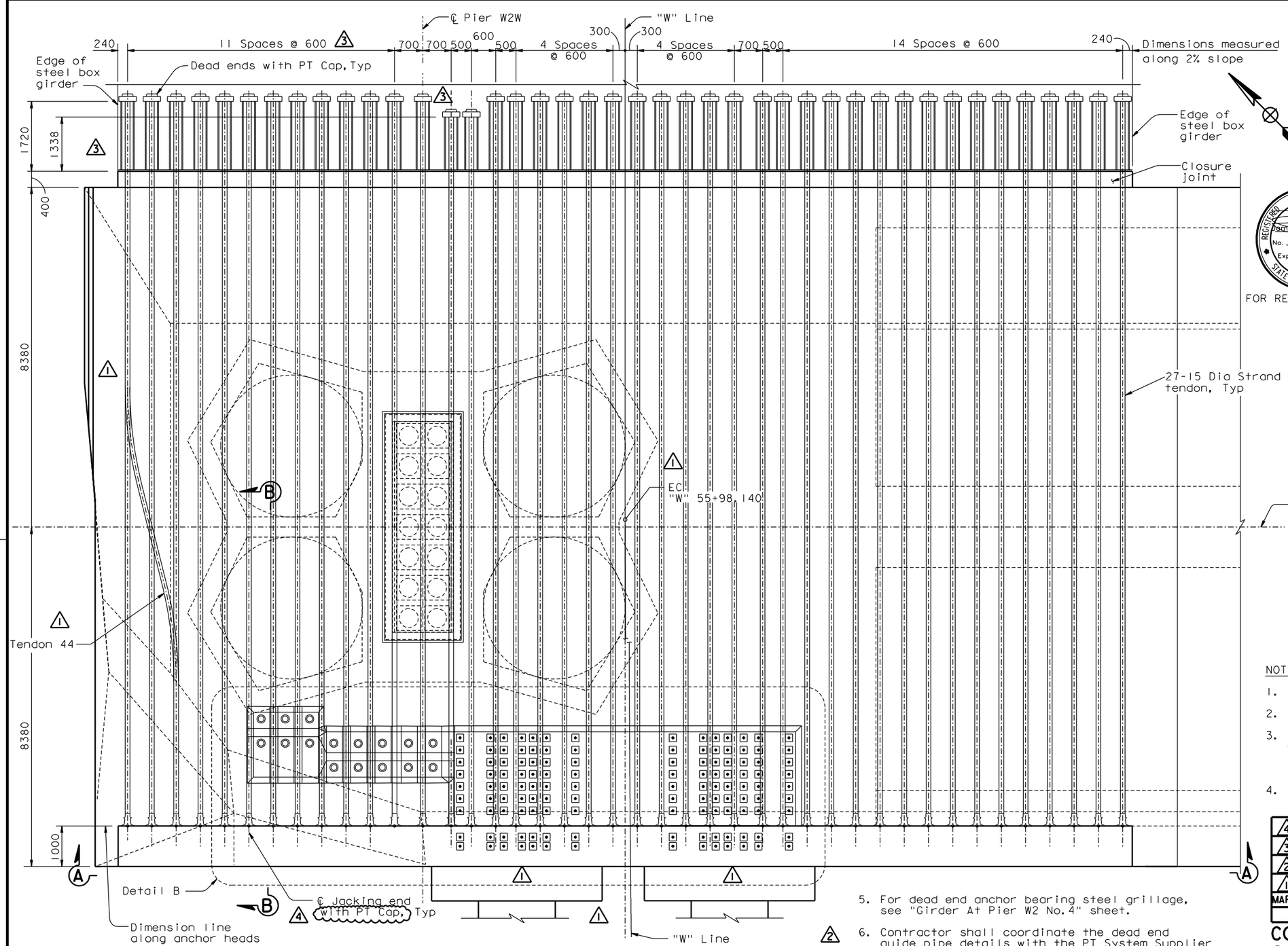

TOP TENDON LAYOUT PLAN ("W" Line)

1:50

ALL DIMENSIONS ARE IN MILLIMETERS UNLESS OTHERWISE SHOWN

FOR REVISIONS ONLY

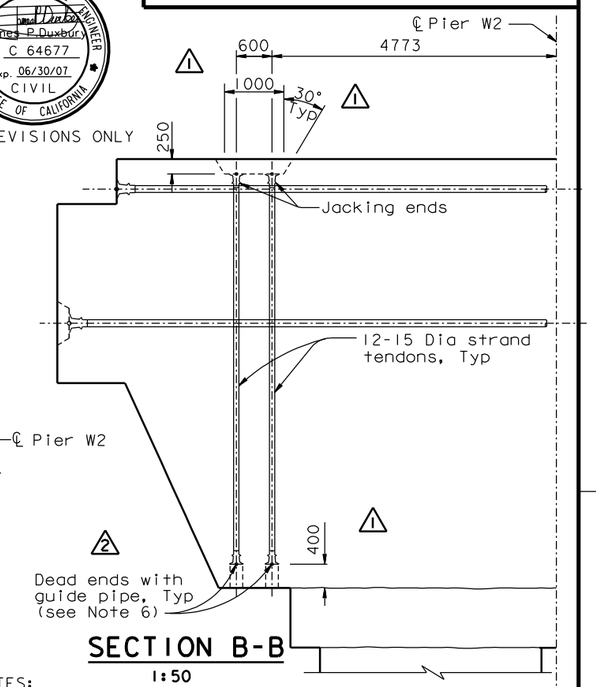

SECTION B-B

1:50

NOTES:

1. For Section A-A, see "W2 Cap Beam Post-Tensioning Details No.9" sheet.
2. For Detail B, see "W2 Cap Beam Post-Tensioning Details No.10" sheet.
3. All W2 cap beam continuity tendons are ASTM A416 Grade 270 (fu=1860 MPa), low relaxation, 27-15 Dia seven wire strand PT, unless specified otherwise. For additional prestressing details, see "Prestressing Notes" sheet.
4. For blockout details, see "W2 Cap Beam Blockout Details" sheets.
5. For dead end anchor bearing steel grillage, see "Girder At Pier W2 No.4" sheet.
6. Contractor shall coordinate the dead end guide pipe details with the PT System Supplier and shall submit them to the Engineer for review and approval. Contractor shall grout the guide pipe after stressing operations have been completed.

MARK	DATE	DESCRIPTIONS	BY	CH'D	CCO#
4	05/04/07	W2 CAP BEAM ISD RESOLUTION	JD	AS	34S1
3	02/16/07	BULKHEAD AT GIRDER PIER W2	JD	AS	27
2	01/31/07	CORROSION PROTECTION	JD	AS	16
1	07/21/06	W2 CAP BEAM ISD	JD	NV	23

REVISIONS

CONTRACT CHANGE ORDER NO. ____
SHEET ___ OF ___

100 % PS&E

DATE PLOTTED => 22 MAY 2007 TIME PLOTTED => 12:21:13

SAN FRANCISCO OAKLAND BAY BRIDGE
EAST SPAN SEISMIC SAFETY PROJECT
SELF-ANCHORED SUSPENSION BRIDGE
(SUPERSTRUCTURE & TOWER)

W2 CAP BEAM POST-TENSIONING DETAILS NO. 7

R. Valizadeh/V. Toan/Y.L./W.L./F.C.
DESIGN OVERSIGHT
SIGN OFF DATE 05/04/07

	BY	CHECKED
DESIGN	J. Sun	M. Chen
DETAILS	J. Duxbury	M. Chen
QUANTITIES	S. Shi	D. Harrison

PREPARED FOR THE STATE OF CALIFORNIA DEPARTMENT OF TRANSPORTATION

R. Manzanarez
PROJECT ENGINEER

BRIDGE NO. 34-0006L/R
KILOMETER POST 13.2/13.9

CU 04
EA 0120F1

Rev. Date: 5-18-98

ORIGINAL SCALE IN MILLIMETERS FOR REDUCED PLANS 0 10 20 30 40 50 60 70 80 90 100

DISREGARD PRINTS BEARING EARLIER REVISION DATES

REVISION DATES (PRELIMINARY STAGE ONLY): 08/02/99 05/31/01 04/08/02 07/01/02 12/19/02

SHEET 051R4 OF

FILE => I:\bb\04-012001\sas\contract plans and cco\cco\in progress\cco#34s1\decpt07.dgn

USERNAME => ptom

MARK	DATE	DESCRIPTIONS	BY	CH'D	CCO#
2	05/04/07	W2 CAP BEAM ISD RESOLUTION	JD	AS	34S1
1	07/21/06	W2 CAP BEAM ISD	JD	AS	23

REVISIONS

CONTRACT CHANGE ORDER NO. _____
SHEET ____ OF ____

FOR REVISIONS ONLY

REGISTERED PROFESSIONAL ENGINEER James P. Duxbury No. C 64677 Exp. 06/30/07 CIVIL STATE OF CALIFORNIA

NOTES:

1. For Section A-A and B-B, see "W2 Cap Beam Reinforcement Details No.16" sheet.
2. For Section C-C and D-D, see "W2 Cap Beam Reinforcement Details No.17" sheet.
3. For Section E-E, see "W2 Cap Beam Reinforcement Details No.18" sheet.
4. For transverse reinforcement layout through as-surveyed column vertical bundled bars, see "W2 Cap Beam Reinforcement Details No.13A and 13B" sheets. (2)

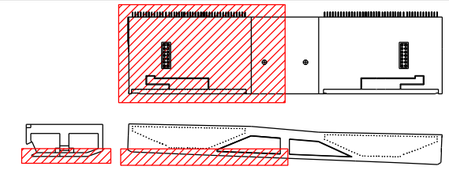

LOCATION KEY
NTS

Caltrans Metric

DIST.	COUNTY	ROUTE	KILOMETER POST TOTAL PROJECT	SHEET NO.	TOTAL SHEETS
04	SF	80	13.2/13.9	483R2	1204

REGISTERED ENGINEER - CIVIL

12-6-04
PLANS APPROVAL DATE

REGISTERED PROFESSIONAL ENGINEER John Sun No. C 54648 Exp. 12/31/05 CIVIL STATE OF CALIFORNIA

The State of California or its officers or agents shall not be responsible for the accuracy or completeness of electronic copies of this plan sheet.

T.Y. LIN / MOFFATT & NICHOL
825 BATTERY STREET
SAN FRANCISCO, CA 94111

To get to the web site, go to: http://www.dot.ca.gov

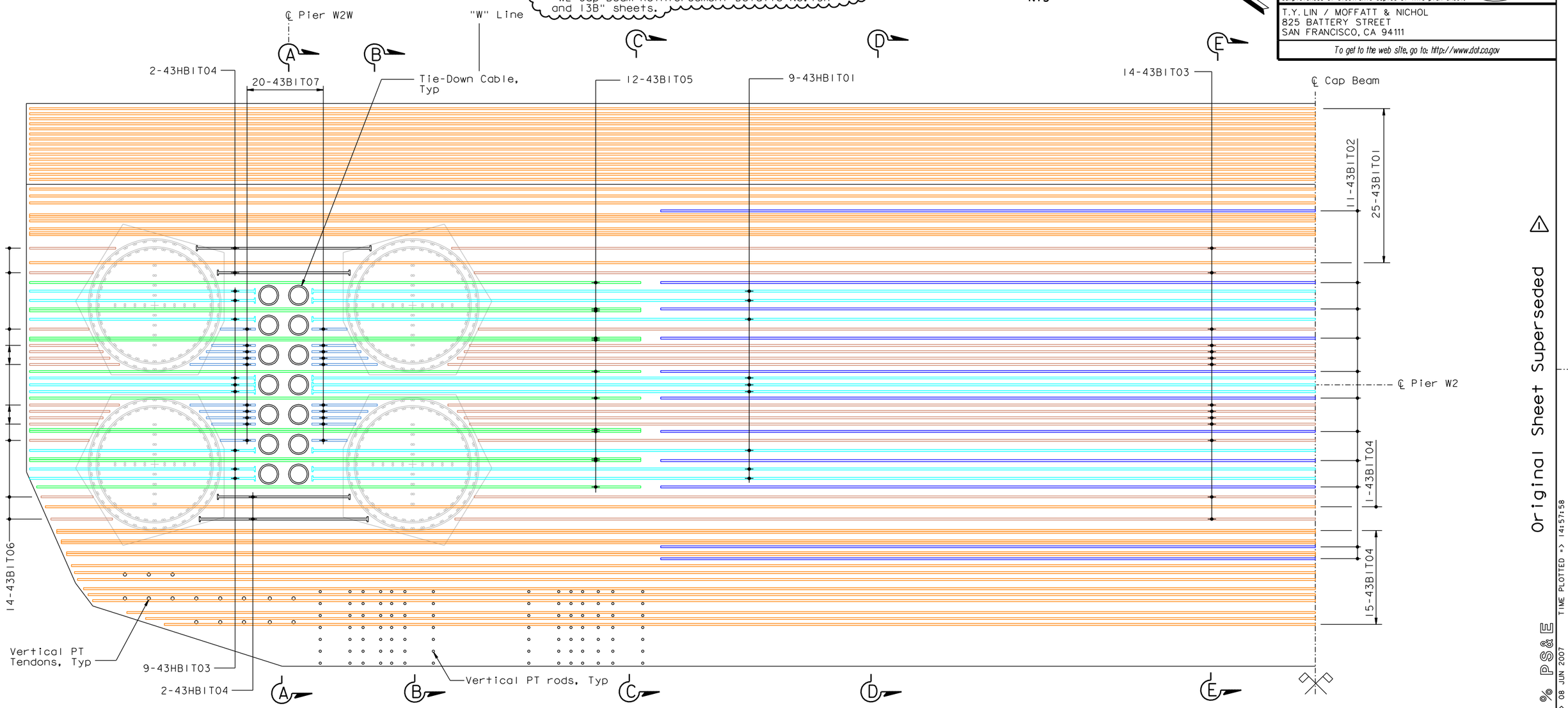

BOTTOM MAT-LAYER B1 REINFORCEMENT PLAN(NORTH) (TRANSVERSE)

1:50

(1) Original Sheet Superseded

100 % PS&E

ALL DIMENSIONS ARE IN MILLIMETERS UNLESS OTHERWISE SHOWN

SAN FRANCISCO OAKLAND BAY BRIDGE
EAST SPAN SEISMIC SAFETY PROJECT
SELF-ANCHORED SUSPENSION BRIDGE
(SUPERSTRUCTURE & TOWER)

W2 CAP BEAM REINFORCEMENT DETAILS NO. 10

R. Valizadeh/V. Toan/Y.L./W.L./F.C.
DESIGN OVERSIGHT
Reza Valizadeh / Vong Toan / Y. Liu
SIGN OFF DATE 05/04/07

	BY	CHECKED
DESIGN	J. Sun	M. Chen
DETAILS	J. Duxbury	M. Chen
QUANTITIES	S. Shi	D. Harrison

PREPARED FOR THE STATE OF CALIFORNIA DEPARTMENT OF TRANSPORTATION

R. Manzanarez
PROJECT ENGINEER

BRIDGE NO. 34-0006L/R
KILOMETER POST 13.2/13.9

Rev. Date: 5-18-98

ORIGINAL SCALE IN MILLIMETERS FOR REDUCED PLANS 0 10 20 30 40 50 60 70 80 90 100

CU 04
EA 0120F1

DISREGARD PRINTS BEARING EARLIER REVISION DATES

REVISION DATES (PRELIMINARY STAGE ONLY) 05/24/01 04/08/02 07/09/02 12/19/02

SHEET 066R2 OF

FILE => I:\bb\04-012001\sas\contract plans and cco\cco\in progress\cco#34s1\dgn\aecap09r-c.dgn

USERNAME => alishansk DATE PLOTTED => 08 JUN 2007 TIME PLOTTED => 14:57:58

REGISTERED PROFESSIONAL ENGINEER James P. Duxbury No. C 64677 Exp. 06/30/07 CIVIL STATE OF CALIFORNIA

FOR REVISIONS ONLY

MARK	DATE	DESCRIPTIONS	BY	CH'D	CCO#
2	05/04/07	W2 CAP BEAM ISD RESOLUTION	JD	AS	3451
1	07/21/06	W2 CAP BEAM ISD	JD	AS	23

REVISIONS

CONTRACT CHANGE ORDER NO. _____
SHEET ____ OF ____

NOTES:

1. For Section A-A and B-B, see "W2 Cap Beam Reinforcement Details No.16" sheet.
2. For Section C-C and D-D, see "W2 Cap Beam Reinforcement Details No.17" sheet.
3. For Section E-E, see "W2 Cap Beam Reinforcement Details No.18" sheet.
4. (2) For transverse reinforcement layout through as-surveyed column vertical bundled bars, see "W2 Cap Beam Reinforcement Details No.13A and 13B" sheets.

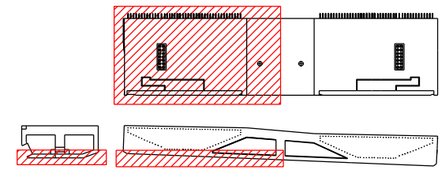

LOCATION KEY
NTS

Caltrans Metric

DIST.	COUNTY	ROUTE	KILOMETER POST TOTAL PROJECT	SHEET NO.	TOTAL SHEETS
04	SF	80	13.2/13.9	484R2	1204

REGISTERED ENGINEER - CIVIL

12-6-04
PLANS APPROVAL DATE

REGISTERED PROFESSIONAL ENGINEER John Sun No. C 54648 Exp. 12/31/05 CIVIL STATE OF CALIFORNIA

The State of California or its officers or agents shall not be responsible for the accuracy or completeness of electronic copies of this plan sheet.

T.Y. LIN / MOFFATT & NICHOL
825 BATTERY STREET
SAN FRANCISCO, CA 94111

To get to the web site, go to: http://www.dot.ca.gov

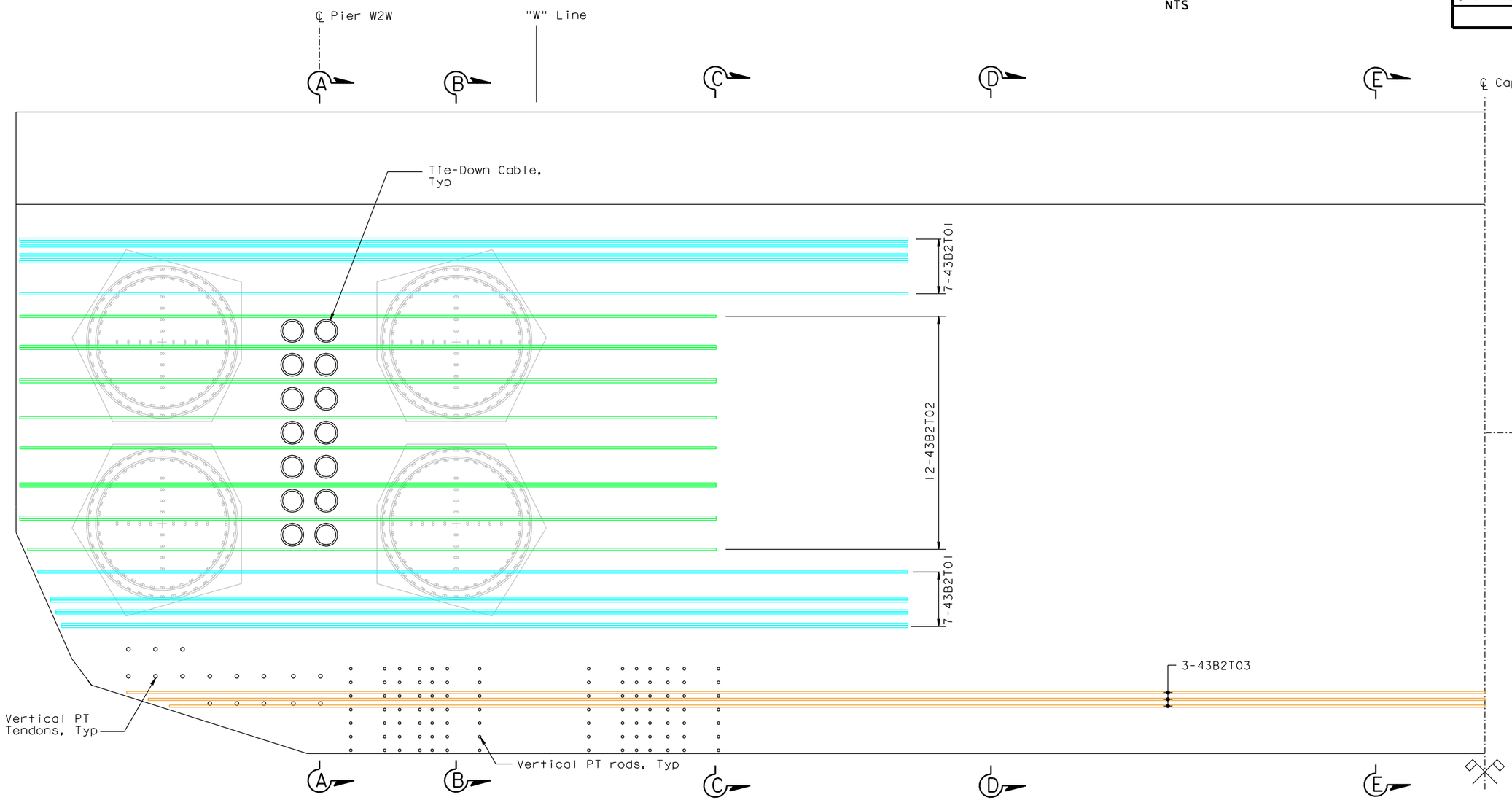

BOTTOM MAT-LAYER B2 REINFORCEMENT PLAN(NORTH) (TRANSVERSE)

1:50

ALL DIMENSIONS ARE IN MILLIMETERS UNLESS OTHERWISE SHOWN

Original Sheet Superseded (1)

100 % PS&E

USERNAME => alishansky DATE PLOTTED => 08 JUN 2007 TIME PLOTTED => 15:00:01

R. Valizadeh/V.Toan/Y.L./W.L./F.C.
DESIGN OVERSIGHT
Roya Valizadeh / Vong Toan / Y. Liu
SIGN OFF DATE 05/04/07

	BY	CHECKED
DESIGN	J. Sun	M. Chen
DETAILS	J. Duxbury	M. Chen
QUANTITIES	S. Shi	D. Harrison

PREPARED FOR THE STATE OF CALIFORNIA DEPARTMENT OF TRANSPORTATION

R. Manzanarez
PROJECT ENGINEER

BRIDGE NO. 34-0006L/R
KILOMETER POST 13.2/13.9

SAN FRANCISCO OAKLAND BAY BRIDGE
EAST SPAN SEISMIC SAFETY PROJECT
SELF-ANCHORED SUSPENSION BRIDGE
(SUPERSTRUCTURE & TOWER)

W2 CAP BEAM REINFORCEMENT DETAILS NO. 11

Rev. Date: 5-18-98

ORIGINAL SCALE IN MILLIMETERS FOR REDUCED PLANS 0 10 20 30 40 50 60 70 80 90 100

CU 04
EA 0120F1

DISREGARD PRINTS BEARING EARLIER REVISION DATES

REVISION DATES (PRELIMINARY STAGE ONLY) 05/24/01 01/08/02 01/09/02 12/19/02

SHEET 067R2 OF

FILE => I:\bb\04-012001\sas\contract plans and cco\cco\in progress\cco#3451\dgn\aecap10r-c.dgn

MARK	DATE	DESCRIPTIONS	BY	CH'D	CCO#
2	05/04/07	W2 CAP BEAM ISD RESOLUTION	JD	AS	3451
1	07/21/06	W2 CAP BEAM ISD	JD	AS	23

REVISIONS

CONTRACT CHANGE ORDER NO. _____
SHEET ____ OF ____

FOR REVISIONS ONLY

REGISTERED PROFESSIONAL ENGINEER James P. Duxbury No. C 64677 Exp. 06/30/07 CIVIL STATE OF CALIFORNIA

NOTES:

1. For Section A-A and B-B, see "W2 Cap Beam Reinforcement Details No.16" sheet.
2. For Section C-C and D-D, see "W2 Cap Beam Reinforcement Details No.17" sheet.
3. For Section E-E, see "W2 Cap Beam Reinforcement Details No.18" sheet.
4. For transverse reinforcement layout through as-surveyed column vertical bundled bars, see "W2 Cap Beam Reinforcement Details No.13A and 13B" sheets. (2)

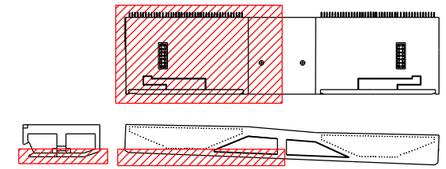

LOCATION KEY
NTS

Caltrans Metric

DIST.	COUNTY	ROUTE	KILOMETER POST TOTAL PROJECT	SHEET NO.	TOTAL SHEETS
04	SF	80	13.2/13.9	485R2	1204

REGISTERED ENGINEER - CIVIL
12-6-04
PLANS APPROVAL DATE

REGISTERED PROFESSIONAL ENGINEER John Sun No. C 54648 Exp. 12/31/05 CIVIL STATE OF CALIFORNIA

The State of California or its officers or agents shall not be responsible for the accuracy or completeness of electronic copies of this plan sheet.

T.Y. LIN / MOFFATT & NICHOL
825 BATTERY STREET
SAN FRANCISCO, CA 94111

To get to the web site, go to: http://www.dot.ca.gov

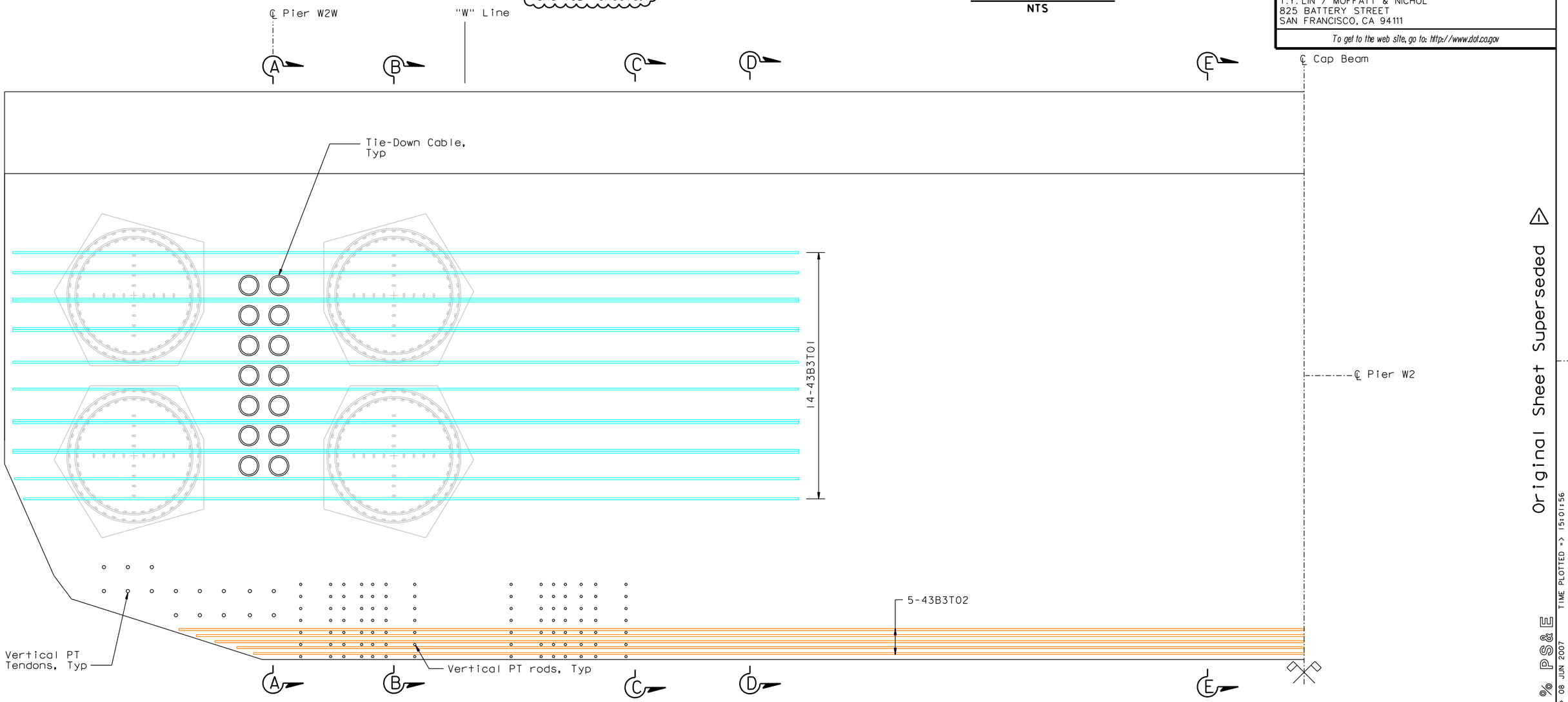

BOTTOM MAT-LAYER B3 REINFORCEMENT PLAN(NORTH) (TRANSVERSE)
1:50

Original Sheet Superseded (1)

100 % PS&E

ALL DIMENSIONS ARE IN MILLIMETERS UNLESS OTHERWISE SHOWN

R. Valizadeh/V. Toan/Y.L./W.L./F.C.
DESIGN OVERSIGHT
SIGN OFF DATE 05/04/07
Rev. Date: 5-18-98

	BY	CHECKED
DESIGN	J. Sun	M. Chen
DETAILS	J. Duxbury	M. Chen
QUANTITIES	S. Shi	D. Harrison

PREPARED FOR THE STATE OF CALIFORNIA DEPARTMENT OF TRANSPORTATION

R. Manzanarez
PROJECT ENGINEER

BRIDGE NO. 34-0006L/R
KILOMETER POST 13.2/13.9

SAN FRANCISCO OAKLAND BAY BRIDGE
EAST SPAN SEISMIC SAFETY PROJECT
SELF-ANCHORED SUSPENSION BRIDGE
(SUPERSTRUCTURE & TOWER)

W2 CAP BEAM REINFORCEMENT DETAILS NO. 12

ORIGINAL SCALE IN MILLIMETERS FOR REDUCED PLANS 0 10 20 30 40 50 60 70 80 90 100

CU 04
EA 0120F1

DISREGARD PRINTS BEARING EARLIER REVISION DATES
REVISION DATES (PRELIMINARY STAGE ONLY) 05/31/01 04/08/02 07/09/02 12/19/02

SHEET 068R2 OF

USERNAME => olishansk DATE PLOTTED => 08 JUN 2007 TIME PLOTTED => 15:01:56

FILE => I:\bb\04-012001\sas\contract plans and cco\cco\in progress\cco#3451\dgn\aecap11r-c.dgn

MARK	DATE	DESCRIPTIONS	BY	CH'D	CCO#
2	05/04/07	W2 CAP BEAM ISD RESOLUTION	JD	AS	3451
1	07/21/06	W2 CAP BEAM ISD	JD	AS	23

REVISIONS

CONTRACT CHANGE ORDER NO. _____
SHEET ____ OF ____

REGISTERED PROFESSIONAL ENGINEER James P. Duxbury No. C 64677 Exp. 06/30/07 CIVIL STATE OF CALIFORNIA

FOR REVISIONS ONLY

NOTES:

1. For Section A-A and B-B, see "W2 Cap Beam Reinforcement Details No.16" sheet.
2. For Section C-C and D-D, see "W2 Cap Beam Reinforcement Details No.17" sheet.
3. For Section E-E, see "W2 Cap Beam Reinforcement Details No.18" sheet.
4. (2) For Details A and A', see "W2 Cap Beam Reinforcement Details No.13A and 13B" sheets.

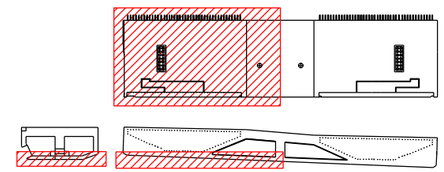

LOCATION KEY
NTS

Caltrans Metric

DIST.	COUNTY	ROUTE	KILOMETER POST TOTAL PROJECT	SHEET NO.	TOTAL SHEETS
04	SF	80	13.2/13.9	486R2	1204

REGISTERED ENGINEER - CIVIL

12-6-04
PLANS APPROVAL DATE

REGISTERED PROFESSIONAL ENGINEER John Sun No. C 54648 Exp. 12/31/05 CIVIL STATE OF CALIFORNIA

The State of California or its officers or agents shall not be responsible for the accuracy or completeness of electronic copies of this plan sheet.

T.Y. LIN / MOFFATT & NICHOL
825 BATTERY STREET
SAN FRANCISCO, CA 94111

To get to the web site, go to: http://www.dot.ca.gov

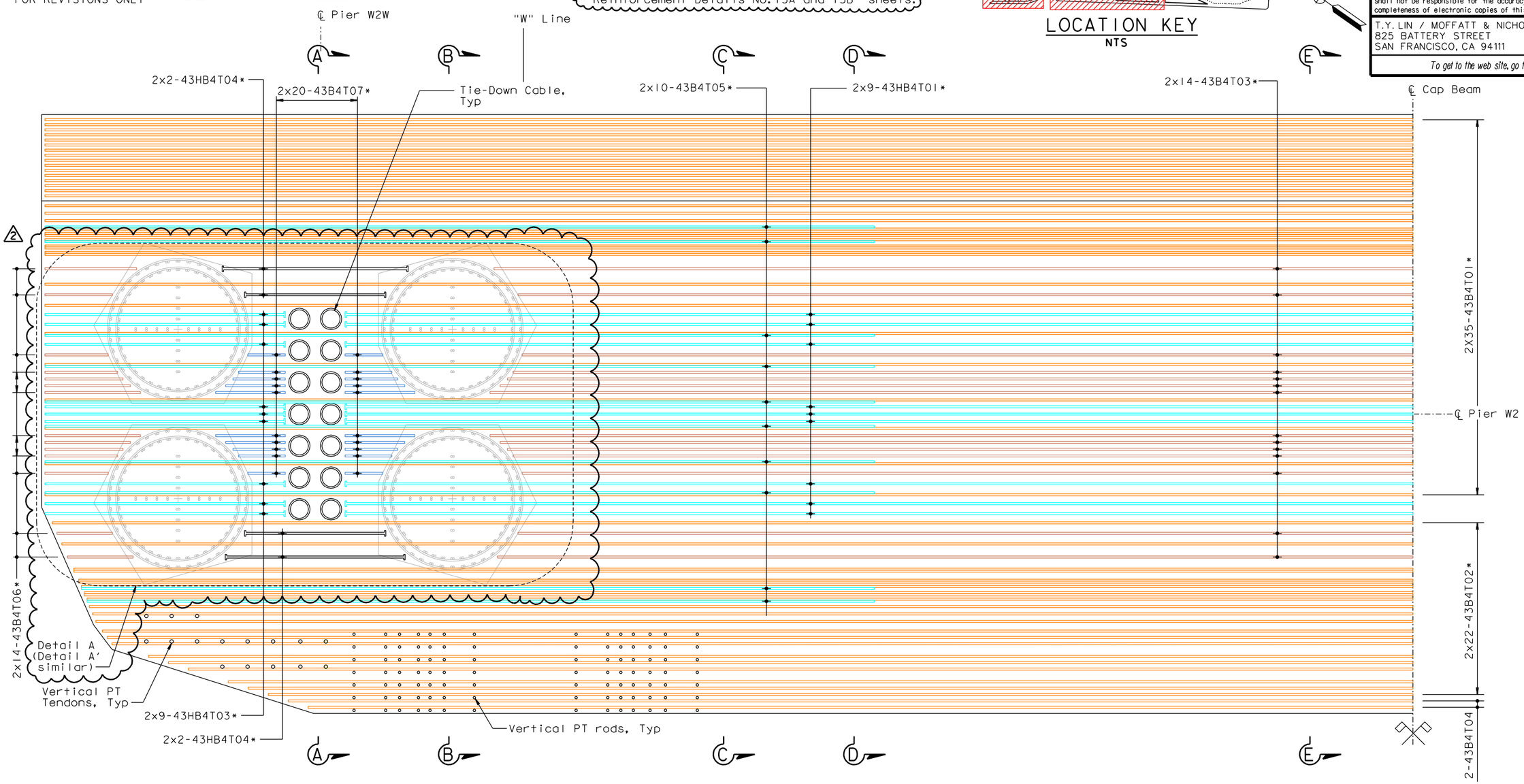

BOTTOM MAT-LAYER B4 REINFORCEMENT PLAN(NORTH) (TRANSVERSE)
1:50

* Denotes Bars Bundled Vertically

ALL DIMENSIONS ARE IN MILLIMETERS UNLESS OTHERWISE SHOWN

Original Sheet Superseded (1)

100% PS&E

USERNAME => alishansky DATE PLOTTED => 08 JUN 2007 TIME PLOTTED => 15:01:09

R. Valizadeh/V.Toan/Y.L./W.L./F.C.
DESIGN OVERSIGHT
Roya Valizadeh / Vong Toan / Y. Liu
SIGN OFF DATE 05/04/07

Rev. Date: 5-18-98

	BY	CHECKED
DESIGN	J. Sun	M. Chen
DETAILS	J. Duxbury	M. Chen
QUANTITIES	S. Shi	D. Harrison

PREPARED FOR THE STATE OF CALIFORNIA DEPARTMENT OF TRANSPORTATION

R. Manzanarez
PROJECT ENGINEER

BRIDGE NO. 34-0006L/R
KILOMETER POST 13.2/13.9

SAN FRANCISCO OAKLAND BAY BRIDGE
EAST SPAN SEISMIC SAFETY PROJECT
SELF-ANCHORED SUSPENSION BRIDGE
(SUPERSTRUCTURE & TOWER)

W2 CAP BEAM REINFORCEMENT DETAILS NO. 13

ORIGINAL SCALE IN MILLIMETERS FOR REDUCED PLANS 0 10 20 30 40 50 60 70 80 90 100

CU 04
EA 0120F1

DISREGARD PRINTS BEARING EARLIER REVISION DATES → 05/24/01 01/08/02 01/09/02 12/19/02

SHEET 069R2 OF

FILE => I:\bb\04-01200I\sas\contract plans and cco\cco\in progress\cco#3451\dgn\aecap12r-c.dgn

DIST.	COUNTY	ROUTE	KILOMETER POST TOTAL PROJECT	SHEET NO.	TOTAL SHEETS
04	SF	80	13.2/13.9	486S1	1204

REGISTERED ENGINEER - CIVIL

05-04-07
PLANS APPROVAL DATE

REGISTERED PROFESSIONAL ENGINEER James P. Duxbury No. C 64677 Exp. 06/30/07 CIVIL STATE OF CALIFORNIA

The State of California or its officers or agents shall not be responsible for the accuracy or completeness of electronic copies of this plan sheet.

T.Y. LIN / MOFFATT & NICHOL
825 BATTERY STREET
SAN FRANCISCO, CA 94111

To get to the web site, go to: http://www.dot.ca.gov

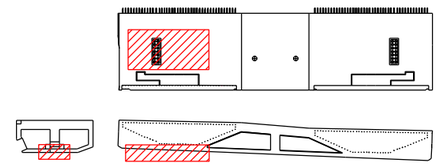

LOCATION KEY
NTS

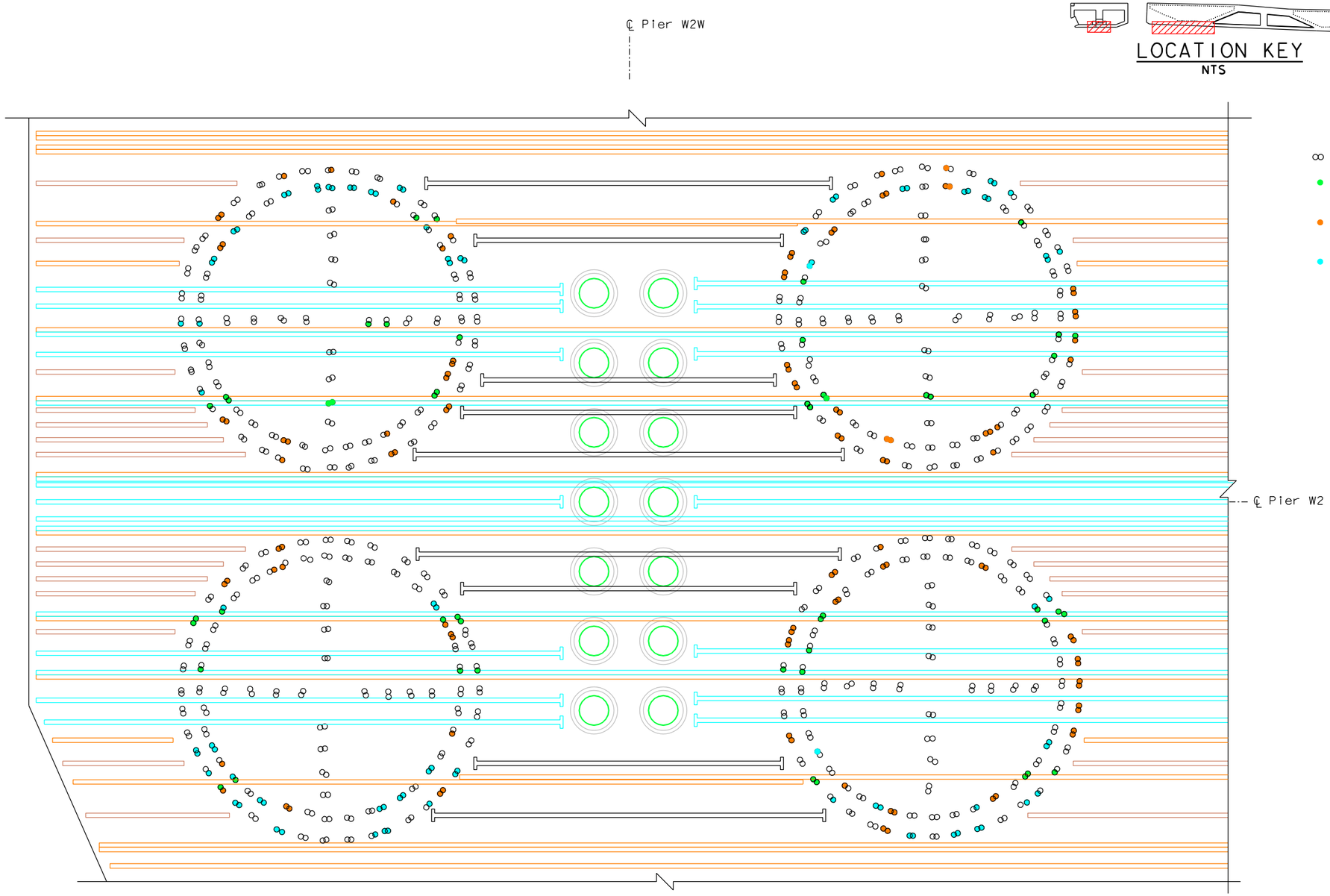

DETAIL A (see Note 1)
1:25

LEGEND:

∞ #43 bundled bar at as-surveyed location

● Indicates #43 column reinforcement may be field cut below #43 Transverse cap beam reinforcement

● Indicates #43 column reinforcement may be field cut below cap beam longitudinal PT duct

● Indicates #43 column reinforcement may be field cut below cap beam transverse PT duct

NOTES:

1. Transverse bottom mat reinforcement layout reflects as-surveyed vertical pier reinforcement locations within Region 4. The revised layout reflects anticipated column reinforcement cut-offs based on the survey data provided by the Contractor.
2. For bottom mat reinforcement outside of Region 4 refer to "W2 Cap Beam Reinforcement Details No. 10 to 13 and 15 to 18" sheets.
3. Transverse bottom mat reinforcement layers B1-B4 shall be similar.
4. Reinforcement shown shall be lap spliced outside of Region 4 as required.
5. For Region 4, see "Pier W2 Details No. 5" sheet.
6. Not all reinforcement shown for clarity.
7. Adjust reinforcement as required to clear column reinforcement.
8. Field cut #43 column reinforcement bundles shall be fitted with a single field-installed round headed anchor.
9. Prior to cutting any column reinforcement, the Contractor is required to submit locations and number of bars to be field cut for Engineer's review and approval.

MARK	DATE	DESCRIPTIONS	BY	CH'D	CCO#
0	05/04/07	W2 CAP BEAM ISD RESOLUTION	JD	AS	34S1

REVISIONS

CONTRACT CHANGE ORDER NO. _____
SHEET ____ OF ____

100% PS&E

ALL DIMENSIONS ARE IN MILLIMETERS UNLESS OTHERWISE SHOWN

R. Valizadeh/V. Toan/Y.L./W.L./F.C.
DESIGN OVERSIGHT
Roya Valizadeh / Vong D. Toan / Y. Liu
SIGN OFF DATE 05/04/07

	BY	CHECKED
DESIGN	J. Duxbury	A. Sanjines
DETAILS	J. Duxbury	A. Sanjines
QUANTITIES	N. Vo	J. Duxbury

PREPARED FOR THE STATE OF CALIFORNIA DEPARTMENT OF TRANSPORTATION

R. Manzanarez
PROJECT ENGINEER

BRIDGE NO. 34-0006L/R
KILOMETER POST 13.2/13.9

SAN FRANCISCO OAKLAND BAY BRIDGE
EAST SPAN SEISMIC SAFETY PROJECT
SELF-ANCHORED SUSPENSION BRIDGE
(SUPERSTRUCTURE & TOWER)

W2 CAP BEAM REINFORCEMENT DETAILS NO. 13A

Rev. Date: 5-18-98

ORIGINAL SCALE IN MILLIMETERS FOR REDUCED PLANS 0 10 20 30 40 50 60 70 80 90 100

CU 04
EA 0120F1

DISREGARD PRINTS BEARING EARLIER REVISION DATES 05/04/07

REVISION DATES (PRELIMINARY STAGE ONLY)

SHEET 069S1 OF

FILE => $REQUEST

USERNAME => $USER DATE PLOTTED => $DATE TIME PLOTTED => $TIME

DIST.	COUNTY	ROUTE	KILOMETER POST TOTAL PROJECT	SHEET NO.	TOTAL SHEETS
04	SF	80	13.2/13.9	486S2	1204

REGISTERED ENGINEER - CIVIL

05-04-07
PLANS APPROVAL DATE

REGISTERED PROFESSIONAL ENGINEER James P.Duxbury No. C 64677 Exp. 06/30/07 CIVIL STATE OF CALIFORNIA

The State of California or its officers or agents shall not be responsible for the accuracy or completeness of electronic copies of this plan sheet.

T.Y. LIN / MOFFATT & NICHOL
825 BATTERY STREET
SAN FRANCISCO, CA 94111

To get to the web site, go to: http://www.dot.ca.gov

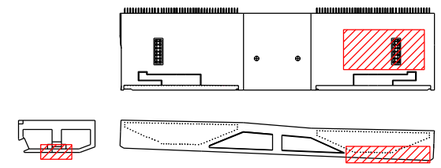

LOCATION KEY
NTS

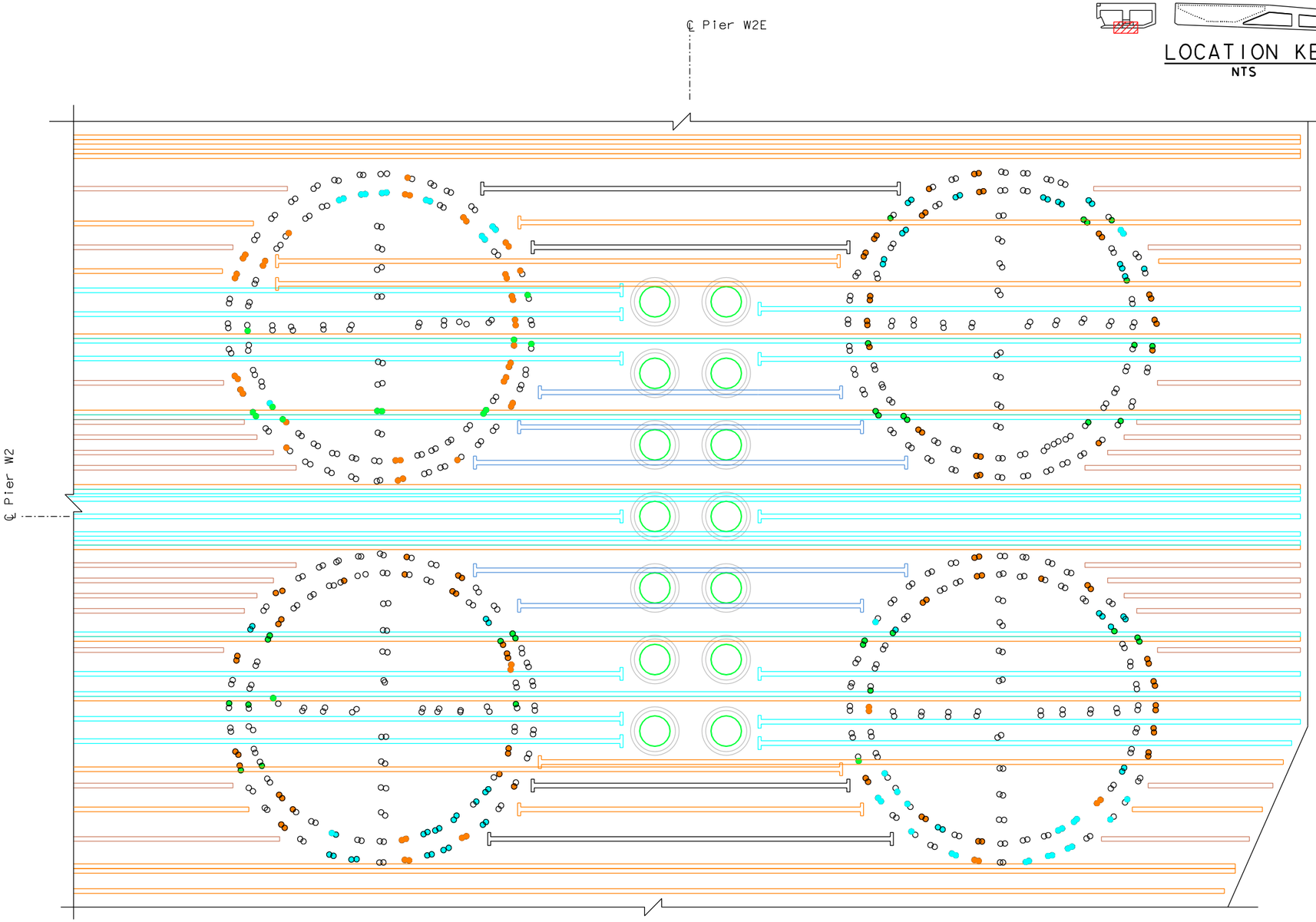

DETAIL A'
1:25
(see Note 1)

LEGEND:

∞ #43 bundled bar at as-surveyed location

● Indicates #43 column reinforcement may be field cut below #43 Transverse cap beam reinforcement

● Indicates #43 column reinforcement may be field cut below cap beam longitudinal PT duct

● Indicates #43 column reinforcement may be field cut below cap beam transverse PT duct

NOTES:

1. Transverse bottom mat reinforcement layout reflects as-surveyed vertical pier reinforcement locations within Region 4. The revised layout reflects anticipated column reinforcement cut-offs based on the survey data provided by the Contractor.
2. For bottom mat reinforcement outside of Region 4 refer to "W2 Cap Beam Reinforcement Details No. 10 to 13 and 15 to 18" sheets.
3. Transverse bottom mat reinforcement layers B1-B4 shall be similar.
4. Reinforcement shown shall be lap spliced outside of Region 4 as required.
5. For Region 4, see "Pier W2 Details No. 5" sheet.
6. Not all reinforcement shown for clarity.
7. Adjust reinforcement as required to clear column reinforcement.
8. Field cut #43 column reinforcement bundles shall be fitted with a single field-installed round headed anchor.
9. Prior to cutting any column reinforcement, the Contractor is required to submit locations and number of bars to be field cut for Engineer's review and approval.

MARK	DATE	DESCRIPTIONS	BY	CH'D	CCO#
0	05/04/07	W2 CAP BEAM ISD RESOLUTION	JD	AS	34S1

REVISIONS

CONTRACT CHANGE ORDER NO. _____
SHEET ____ OF ____

100% PS&E

ALL DIMENSIONS ARE IN MILLIMETERS UNLESS OTHERWISE SHOWN

R. Valizadeh/V. Toan/Y.L./W.L./F.C.
DESIGN OVERSIGHT
SIGN OFF DATE 05/04/07

	BY	CHECKED
DESIGN	J. Duxbury	A. Sanjines
DETAILS	J. Duxbury	A. Sanjines
QUANTITIES	N. Vo	J. Duxbury

PREPARED FOR THE STATE OF CALIFORNIA DEPARTMENT OF TRANSPORTATION

R. Manzanarez
PROJECT ENGINEER

BRIDGE NO. 34-0006L/R
KILOMETER POST 13.2/13.9

SAN FRANCISCO OAKLAND BAY BRIDGE
EAST SPAN SEISMIC SAFETY PROJECT
SELF-ANCHORED SUSPENSION BRIDGE
(SUPERSTRUCTURE & TOWER)

W2 CAP BEAM REINFORCEMENT DETAILS NO. 13B

Rev. Date: 5-18-98

ORIGINAL SCALE IN MILLIMETERS FOR REDUCED PLANS 0 10 20 30 40 50 60 70 80 90 100

CU 04
EA 0120F1

DISREGARD PRINTS BEARING EARLIER REVISION DATES → 05/04/07

REVISION DATES (PRELIMINARY STAGE ONLY)

SHEET 069S2 OF

FILE => I:\bb\04-012001\sas\contract plans and cco\cco\in progress\cco#34s1\aecap12bc.dgn

USERNAME => ptrom DATE PLOTTED => 09 MAY 2007 TIME PLOTTED => 15:29:20

MARK	DATE	DESCRIPTIONS	BY	CH'D	CCO#
2	05/04/07	W2 CAP BEAM ISD RESOLUTION	JD	AS	34S1
1	07/21/06	W2 CAP BEAM ISD	JD	AS	23

REVISIONS

CONTRACT CHANGE ORDER NO. _____
SHEET ____ OF ____

FOR REVISIONS ONLY

REGISTERED PROFESSIONAL ENGINEER James P. Duxbury No. C 64677 Exp. 06/30/07 CIVIL STATE OF CALIFORNIA

NOTES:

1. For Section A-A and B-B, see "W2 Cap Beam Reinforcement Details No.22" sheet.
2. All reinforcement placed parallel to soffit.
3. For Jacking Saddle Opening details, see "W2 Cap Beam Dimension Details No.3" sheet. (2)

Caltrans Metric

DIST.	COUNTY	ROUTE	KILOMETER POST TOTAL PROJECT	SHEET NO.	TOTAL SHEETS
04	SF	80	13.2/13.9	492R2	1204

REGISTERED ENGINEER - CIVIL

12-6-04
PLANS APPROVAL DATE

REGISTERED PROFESSIONAL ENGINEER John Sun No. C 54648 Exp. 12/31/05 CIVIL STATE OF CALIFORNIA

The State of California or its officers or agents shall not be responsible for the accuracy or completeness of electronic copies of this plan sheet.

T.Y. LIN / MOFFATT & NICHOL
825 BATTERY STREET
SAN FRANCISCO, CA 94111

To get to the web site, go to: http://www.dot.ca.gov

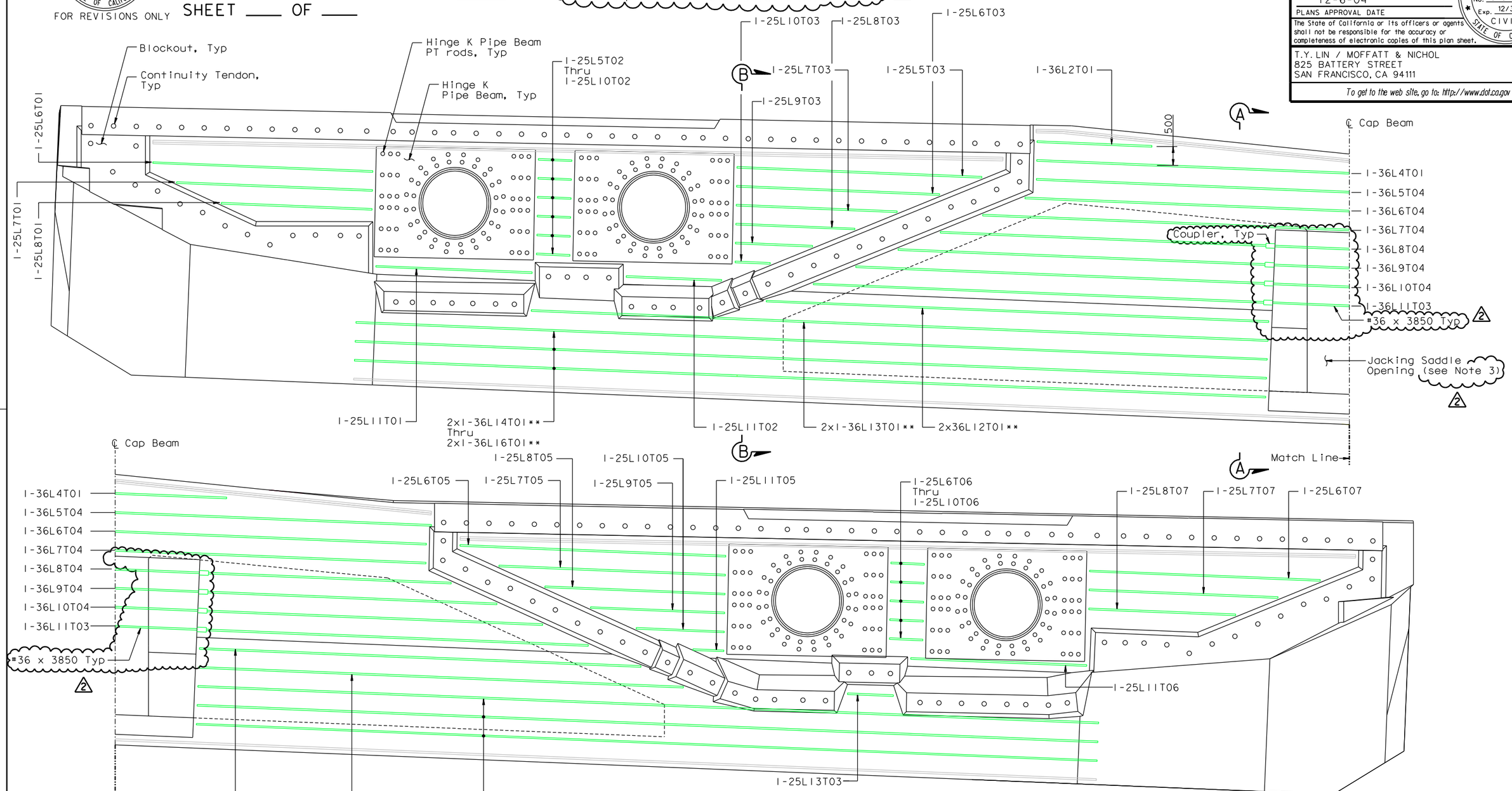

WEST FACE REINFORCEMENT (EXTERIOR)
(Looking East)
1:50

** Denotes Bars Bundled Horizontally

ALL DIMENSIONS ARE IN MILLIMETERS UNLESS OTHERWISE SHOWN

Original Sheet

100 % PS&E

Superseded

TIME PLOTTED => 15:03:46
DATE PLOTTED => 08 JUN 2007
USERNAME => olishansk

R. Valizadeh/V. Toan/Y.L./W.L./F.C.
DESIGN OVERSIGHT
SIGN OFF DATE 05/04/07

Rev. Date: 5-18-98

DESIGN	BY J. Sun	CHECKED M. Chen	
DETAILS	BY J. Duxbury	CHECKED M. Chen	
QUANTITIES	BY S. Shi	CHECKED D. Harrison	

PREPARED FOR THE STATE OF CALIFORNIA DEPARTMENT OF TRANSPORTATION

R. Manzanarez
PROJECT ENGINEER

BRIDGE NO. 34-0006L/R
KILOMETER POST 13.2/13.9

SAN FRANCISCO OAKLAND BAY BRIDGE
EAST SPAN SEISMIC SAFETY PROJECT
SELF-ANCHORED SUSPENSION BRIDGE
(SUPERSTRUCTURE & TOWER)

W2 CAP BEAM REINFORCEMENT DETAILS NO. 19

ORIGINAL SCALE IN MILLIMETERS FOR REDUCED PLANS 0 10 20 30 40 50 60 70 80 90 100

CU 04
EA 0120F1

DISREGARD PRINTS BEARING EARLIER REVISION DATES

REVISION DATES (PRELIMINARY STAGE ONLY) 05/31/01 04/08/02 07/01/02 12/19/02

SHEET 075R2 OF

FILE => I:\bb\04-012001\sas\contract plans and cco\cco\in progress\cco#34s1\dgn\aecap18r-c.dgn

MARK	DATE	DESCRIPTIONS	BY	CH'D	CCO#
2	05/04/07	W2 CAP BEAM ISD RESOLUTION	JD	AS	34S1
1	07/21/06	W2 CAP BEAM ISD	JD	AS	23

REVISIONS

CONTRACT CHANGE ORDER NO. _____
SHEET ____ OF ____

FOR REVISIONS ONLY

REGISTERED PROFESSIONAL ENGINEER James P. Duxbury No. C 64677 Exp. 06/30/07 CIVIL STATE OF CALIFORNIA

NOTES:

1. For Section A-A and B-B, see "W2 Cap Beam Reinforcement Details No.22" sheet.
2. For Jacking Saddle Opening details, see "W2 Cap Beam Dimension Details No.3" sheet. 2

Caltrans Metric

DIST.	COUNTY	ROUTE	KILOMETER POST TOTAL PROJECT	SHEET NO.	TOTAL SHEETS
04	SF	80	13.2/13.9	493R2	1204

REGISTERED ENGINEER - CIVIL

12-6-04
PLANS APPROVAL DATE

REGISTERED PROFESSIONAL ENGINEER John Sun No. C 54648 Exp. 12/31/05 CIVIL STATE OF CALIFORNIA

The State of California or its officers or agents shall not be responsible for the accuracy or completeness of electronic copies of this plan sheet.

T.Y. LIN / MOFFATT & NICHOL
825 BATTERY STREET
SAN FRANCISCO, CA 94111

To get to the web site, go to: http://www.dot.ca.gov

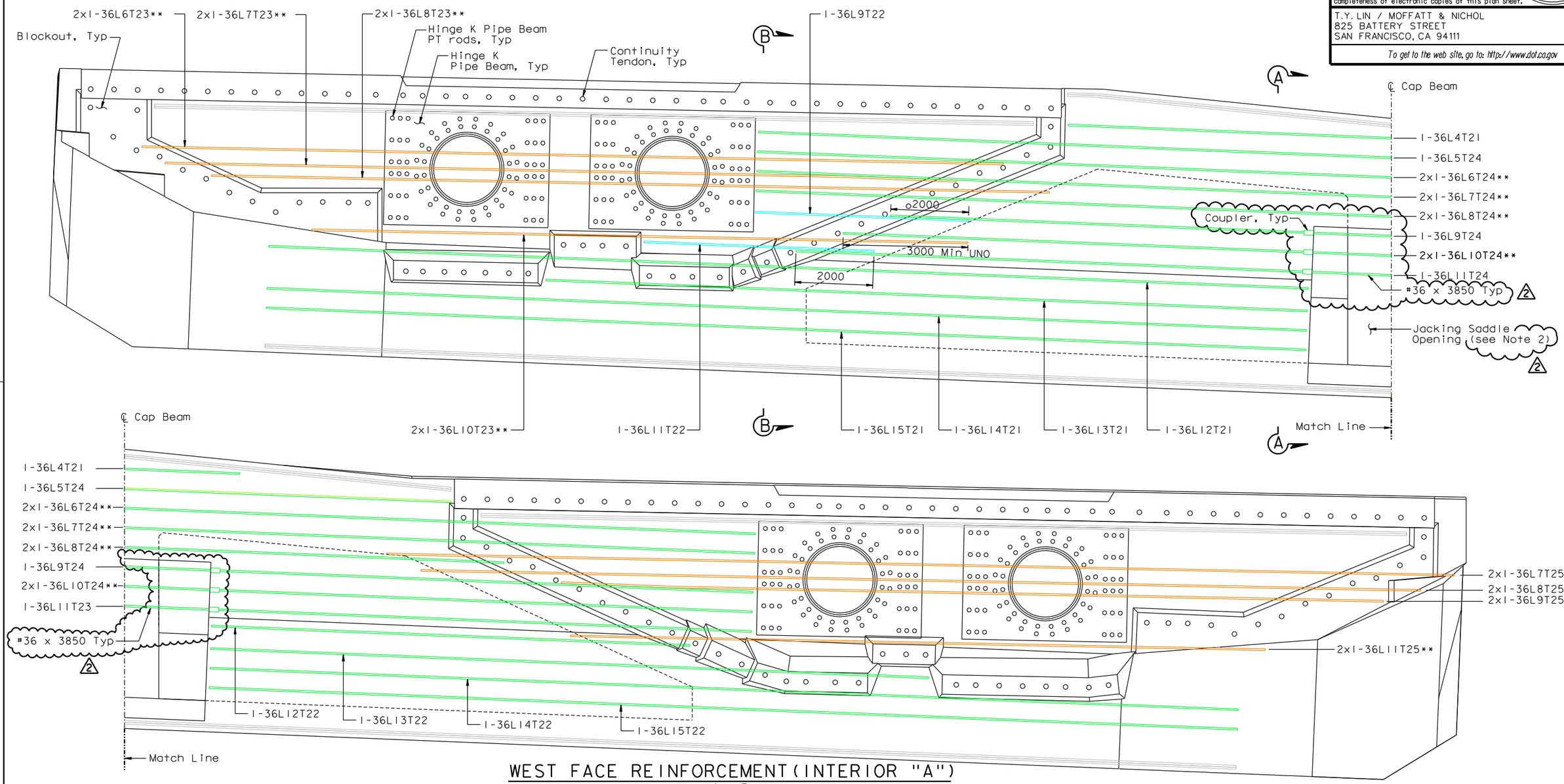

WEST FACE REINFORCEMENT (INTERIOR "A")
(Looking East)
1:50

** Denotes Bars Bundled Horizontally

ALL DIMENSIONS ARE IN MILLIMETERS UNLESS OTHERWISE SHOWN

Original Sheet

100 % PS&E

TIME PLOTTED => 15:02:47
DATE PLOTTED => 08 JUN 2007
USERNAME => olishansk

R. Valizadeh/V.Toan/Y.L./W.L./F.C.
DESIGN OVERSIGHT
SIGN OFF DATE 05/04/07

DESIGN	BY J. Sun	CHECKED M. Chen	
DETAILS	BY J. Duxbury	CHECKED M. Chen	
QUANTITIES	BY S. Shi	CHECKED D. Harrison	

PREPARED FOR THE STATE OF CALIFORNIA DEPARTMENT OF TRANSPORTATION

R. Manzanarez
PROJECT ENGINEER

BRIDGE NO. 34-0006L/R
KILOMETER POST 13.2/13.9

SAN FRANCISCO OAKLAND BAY BRIDGE
EAST SPAN SEISMIC SAFETY PROJECT
SELF-ANCHORED SUSPENSION BRIDGE
(SUPERSTRUCTURE & TOWER)

W2 CAP BEAM REINFORCEMENT DETAILS NO. 20

Rev. Date: 5-18-98

ORIGINAL SCALE IN MILLIMETERS FOR REDUCED PLANS 0 10 20 30 40 50 60 70 80 90 100

CU 04
EA 0120F1

DISREGARD PRINTS BEARING EARLIER REVISION DATES

REVISION DATES (PRELIMINARY STAGE ONLY) 05/31/01 04/08/02 07/01/02 12/19/02

SHEET 076R2 OF

FILE => I:\bb\04-012001\sas\contract plans and cco\cco\in progress\cco#34s1\dgn\aecap19r-c.dgn

DIST.	COUNTY	ROUTE	KILOMETER POST TOTAL PROJECT	SHEET NO.	TOTAL SHEETS
04	SF	80	13.2/13.9	495R2	1204

REGISTERED ENGINEER - CIVIL

12-6-04
PLANS APPROVAL DATE

REGISTERED PROFESSIONAL ENGINEER John Sun No. C 54648 Exp. 12/31/05 CIVIL STATE OF CALIFORNIA

The State of California or its officers or agents shall not be responsible for the accuracy or completeness of electronic copies of this plan sheet.

T.Y. LIN / MOFFATT & NICHOL
825 BATTERY STREET
SAN FRANCISCO, CA 94111

To get to the web site, go to: http://www.dot.ca.gov

Caltrans Metric

4. At the Contractor's option, ties within the inclined wall may be replaced with headed bars and adjusted normal to the slope of the face. Interior transverse bars may be shifted along the face. (2)

NOTES:

1. Top mat reinforcement not shown for clarity. See "W2 Cap Beam Reinforcement Details No.2 to No.8" sheets.
2. Bottom mat reinforcement not shown for clarity. See "W2 Cap Beam Reinforcement Details No.9 to No.18" sheets.
3. Horizontal and vertical stirrup reinforcement not shown for clarity. See "W2 Cap Beam Reinforcement Details No.40 to No.43" sheets.

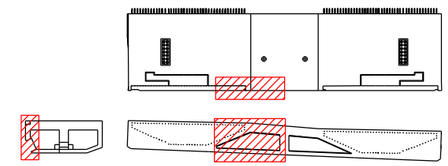

LOCATION KEY
NTS

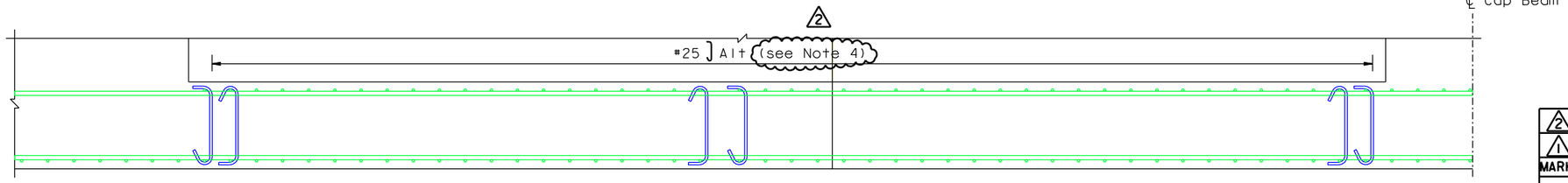

WEST FACE REINFORCEMENT-EXTERIOR AND INTERIOR A PLAN(NORTH)
(North Side Shown, South Side Similar)
1:30

MARK	DATE	DESCRIPTIONS	BY	CH'D	CCO#
2	05/04/07	W2 CAP BEAM ISD RESOLUTION	JD	AS	34S1
1	07/21/06	W2 CAP BEAM ISD	JD	AS	23

REVISIONS

CONTRACT CHANGE ORDER NO. ____
SHEET ____ OF ____

REGISTERED PROFESSIONAL ENGINEER James P. Duxbury No. C 64677 Exp. 06/30/07 CIVIL STATE OF CALIFORNIA

FOR REVISIONS ONLY (1)

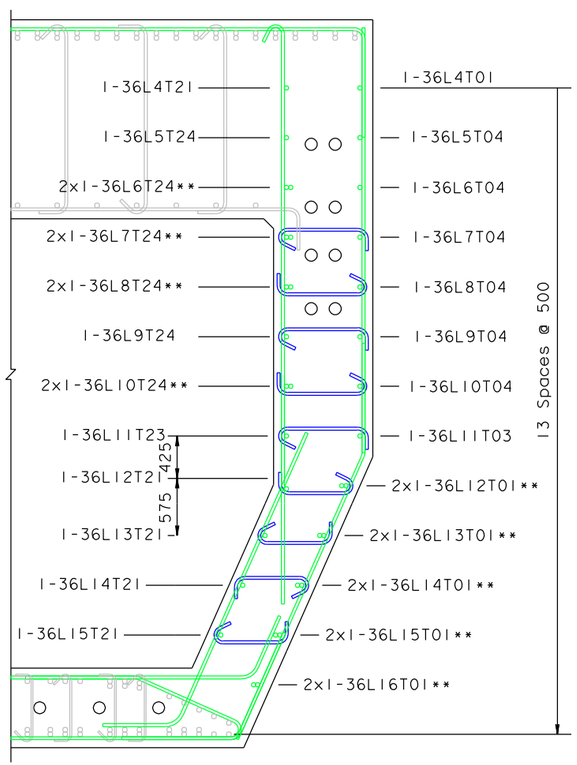

SECTION A-A

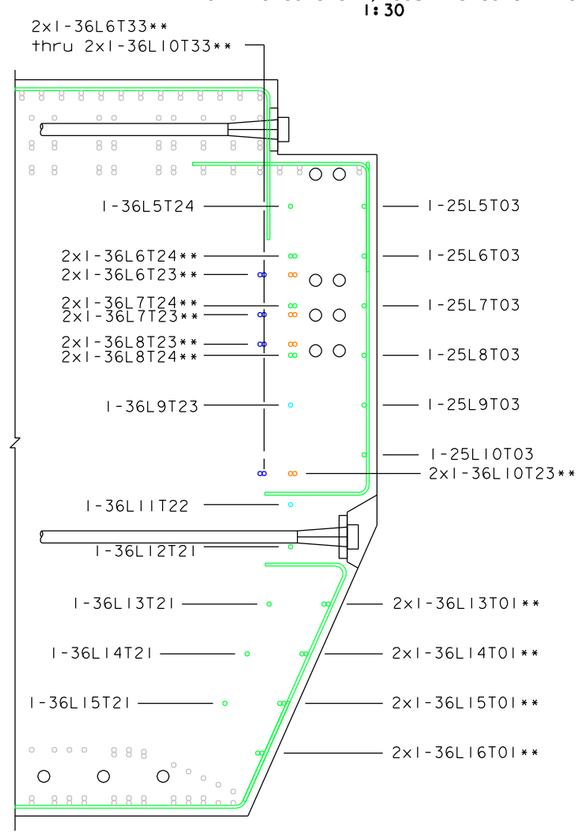

SECTION B-B

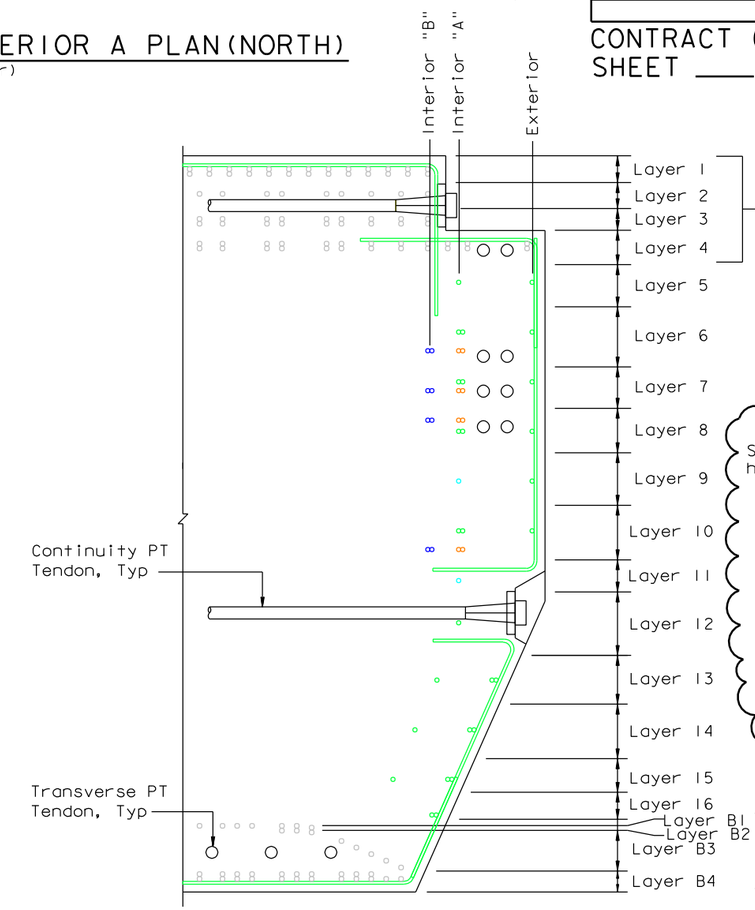

LAYER ID

(2)

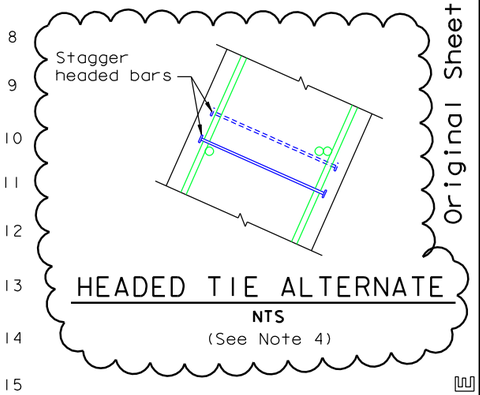

HEADED TIE ALTERNATE
NTS
(See Note 4)

Original Sheet Superseded

100 % PS&E

WEST FACE REINFORCEMENT
(North Side Shown, South Side Similar)
1:30

** Denotes Bars Bundled Horizontally

ALL DIMENSIONS ARE IN MILLIMETERS UNLESS OTHERWISE SHOWN

R. Valizadeh/V. Toan/Y.L./W.L./F.C.
DESIGN OVERSIGHT
Y. Liu
SIGN OFF DATE 05/04/07

	BY	CHECKED
DESIGN	J. Sun	M. Chen
DETAILS	J. Duxbury	M. Chen
QUANTITIES	S. Shi	D. Harrison

PREPARED FOR THE STATE OF CALIFORNIA DEPARTMENT OF TRANSPORTATION

R. Manzanarez
PROJECT ENGINEER

BRIDGE NO. 34-0006L/R
KILOMETER POST 13.2/13.9

SAN FRANCISCO OAKLAND BAY BRIDGE
EAST SPAN SEISMIC SAFETY PROJECT
SELF-ANCHORED SUSPENSION BRIDGE
(SUPERSTRUCTURE & TOWER)

W2 CAP BEAM REINFORCEMENT DETAILS NO. 22

Rev. Date: 5-18-98

ORIGINAL SCALE IN MILLIMETERS FOR REDUCED PLANS 0 10 20 30 40 50 60 70 80 90 100

CU 04
EA 0120F1

DISREGARD PRINTS BEARING EARLIER REVISION DATES

REVISION DATES (PRELIMINARY STAGE ONLY) 05/31/01 04/08/02 01/04/02 12/19/02

SHEET 078R2 OF

FILE => I:\bb\04-012001\sas\contract plans and cco\cco\in progress\cco#34s1\dgn\aecap21r-c.dgn

USERNAME => ptom DATE PLOTTED => 08 JUN 2007 TIME PLOTTED => 15:00:36

DIST.	COUNTY	ROUTE	KILOMETER POST TOTAL PROJECT	SHEET NO.	TOTAL SHEETS
04	SF	80	13.2/13.9	497S4R1	1204

REGISTERED ENGINEER - CIVIL

07-21-06

PLANS APPROVAL DATE

REGISTERED PROFESSIONAL ENGINEER James P. Duxbury No. C 64677 Exp. 06/30/07 CIVIL STATE OF CALIFORNIA

The State of California or its officers or agents shall not be responsible for the accuracy or completeness of electronic copies of this plan sheet.

T.Y. LIN / MOFFATT & NICHOL
825 BATTERY STREET
SAN FRANCISCO, CA 94111

To get to the web site, go to: http://www.dot.ca.gov

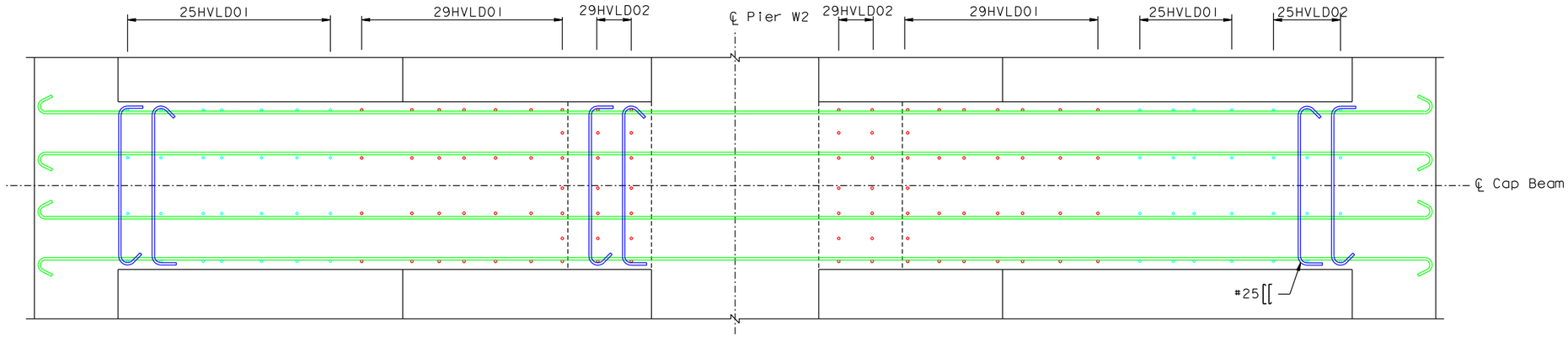

LONGITUDINAL DIAPHRAGM REINFORCEMENT PLAN
1:30

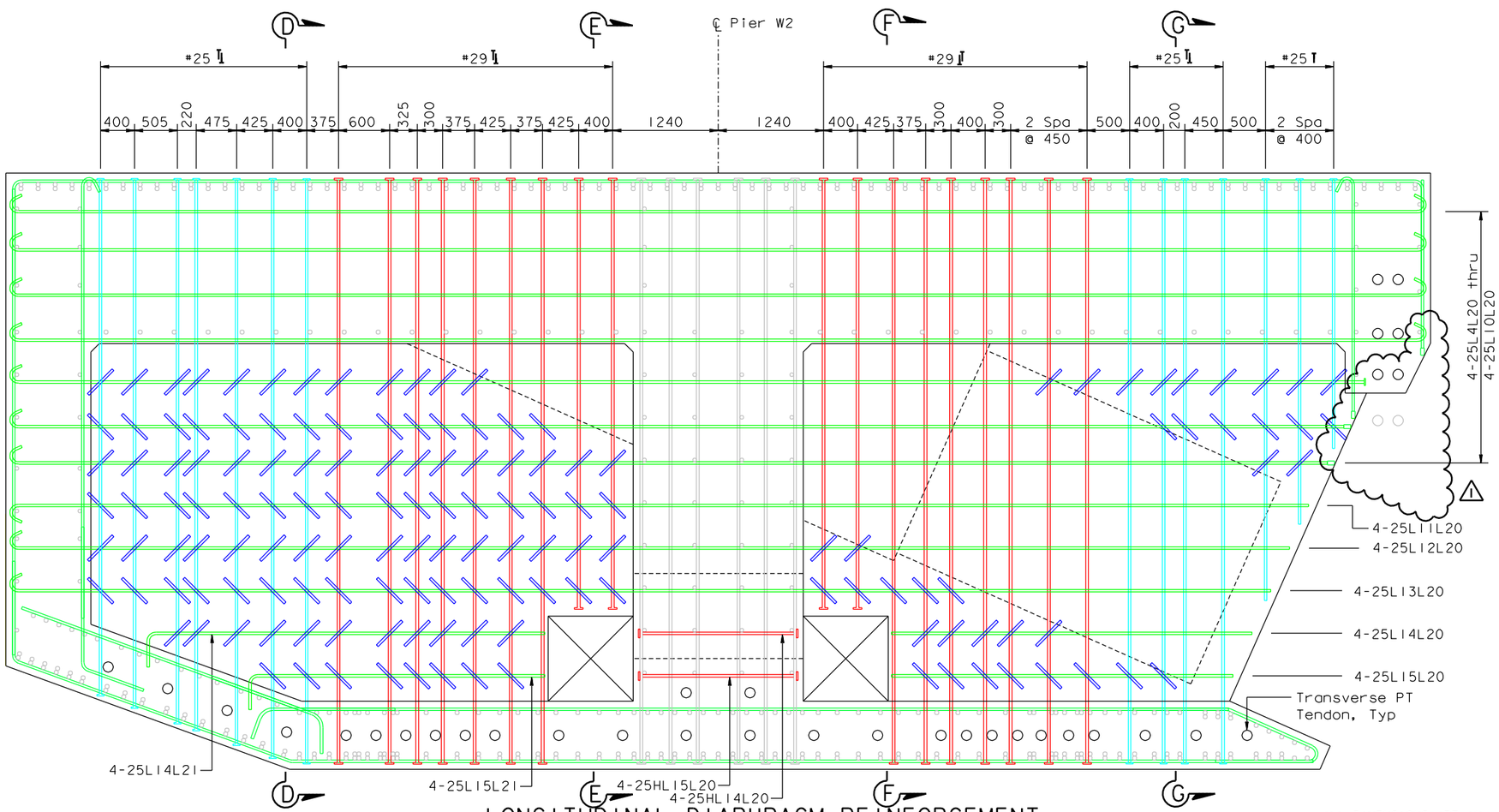

LONGITUDINAL DIAPHRAGM REINFORCEMENT
1:30

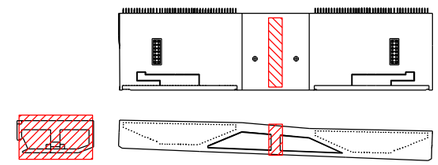

LOCATION KEY
NTS

NOTES:

1. For Section D-D thru G-G, see "W2 Cap Beam Reinforcement Details No.29" sheet.

MARK	DATE	DESCRIPTIONS	BY	CH'D	CCO#
1	05/04/07	W2 CAP BEAM ISD RESOLUTION	JD	AS	34S1
0	07/21/06	W2 CAP BEAM ISD	JD	AS	23

REVISIONS

CONTRACT CHANGE ORDER NO. _____
SHEET ____ OF ____

ALL DIMENSIONS ARE IN MILLIMETERS UNLESS OTHERWISE SHOWN

SAN FRANCISCO OAKLAND BAY BRIDGE
EAST SPAN SEISMIC SAFETY PROJECT
SELF-ANCHORED SUSPENSION BRIDGE
(SUPERSTRUCTURE & TOWER)

W2 CAP BEAM REINFORCEMENT DETAILS NO. 28

R. Valizadeh/V. Toan/Y.L./W.L./F.C.
DESIGN OVERSIGHT
SIGN OFF DATE 05/04/07

	BY	CHECKED
DESIGN	J. Duxbury	A. Sanjines
DETAILS	J. Duxbury	A. Sanjines
QUANTITIES	N. Vo	J. Duxbury

PREPARED FOR THE STATE OF CALIFORNIA DEPARTMENT OF TRANSPORTATION

R. Manzanarez
PROJECT ENGINEER

BRIDGE NO. 34-0006L/R
KILOMETER POST 13.2/13.9

CU 04
EA 0120F1

Rev. Date: 5-18-98

ORIGINAL SCALE IN MILLIMETERS FOR REDUCED PLANS 0 10 20 30 40 50 60 70 80 90 100

DISREGARD PRINTS BEARING EARLIER REVISION DATES 07/21/06

REVISION DATES (PRELIMINARY STAGE ONLY)

SHEET 080S4R1 OF

FILE => I:\bb\04-012001\sas\contract plans and cco\cco\in progress\cco#34s1\decap27r-s.dgn

100 % PS&E

DATE PLOTTED => 10 MAY 2007 TIME PLOTTED => 12:04:04

USERNAME => ptom

DIST.	COUNTY	ROUTE	KILOMETER POST TOTAL PROJECT	SHEET NO.	TOTAL SHEETS
04	SF	80	13.2/13.9	497S6R1	1204

REGISTERED ENGINEER - CIVIL

07-21-06

PLANS APPROVAL DATE

REGISTERED PROFESSIONAL ENGINEER James P. Duxbury No. C 64677 Exp. 06/30/07 CIVIL STATE OF CALIFORNIA

The State of California or its officers or agents shall not be responsible for the accuracy or completeness of electronic copies of this plan sheet.

T.Y. LIN / MOFFATT & NICHOL
825 BATTERY STREET
SAN FRANCISCO, CA 94111

To get to the web site, go to: http://www.dot.ca.gov

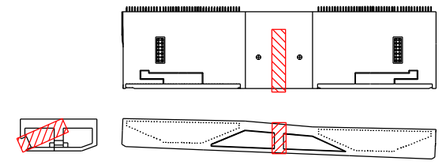

LOCATION KEY
NTS

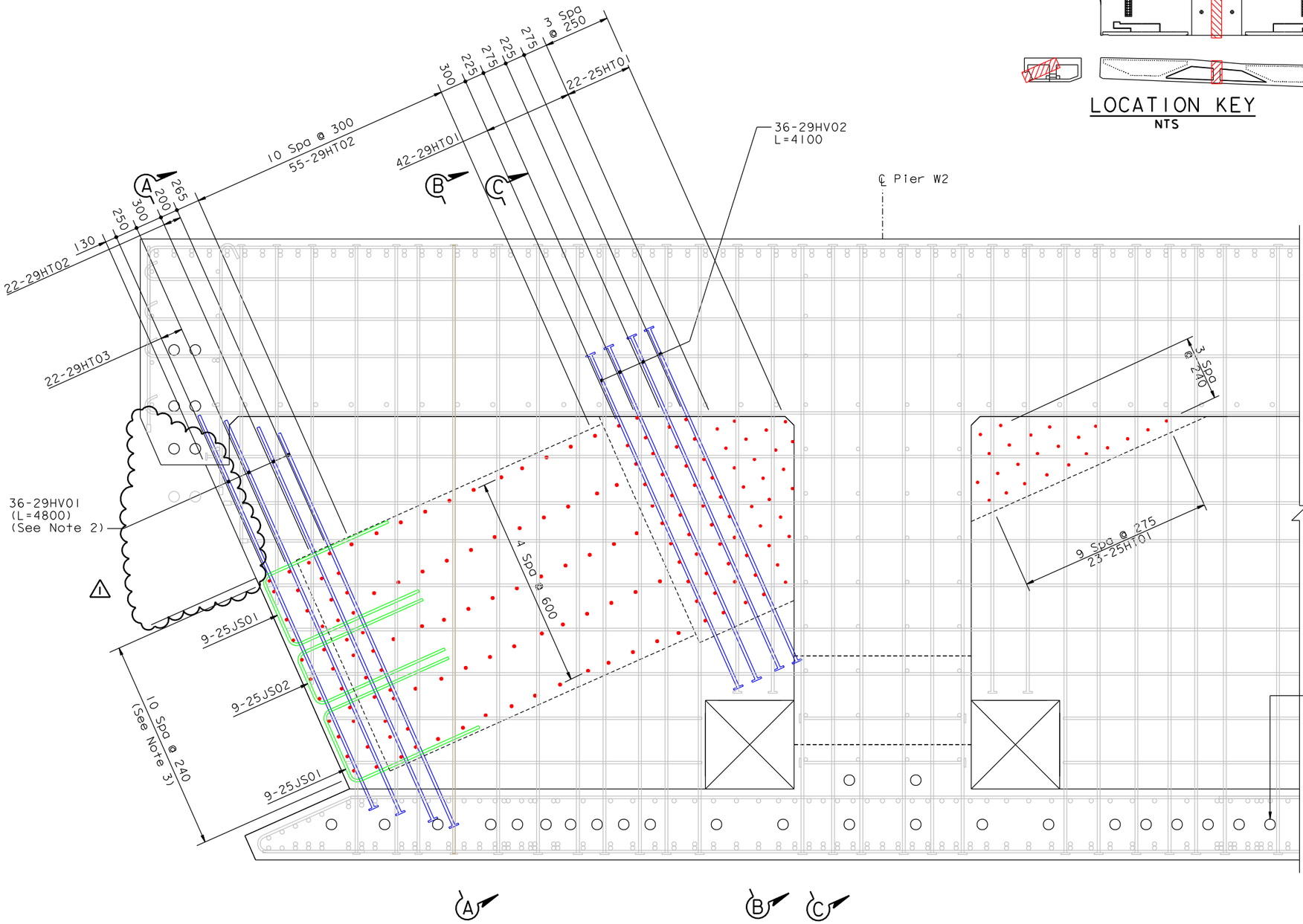

NOTES:

1. For Section A-A thru C-C, see "W2 Cap Beam Reinforcement Details No.32" sheet.
2. Extend headed bar beyond Bottom Mat Layer B1.
3. Space as required to clear diaphragm reinforcement.
4. For Longitudinal diaphragm reinforcement, see "W2 Cap Beam Reinforcement Details No.28" sheet.
5. Jacking Saddle reinforcement placed normal to axis of jacking frame.

JACKING SADDLE REINFORCEMENT
(Jacking Frame At Longitudinal Diaphragm)
1:25

MARK	DATE	DESCRIPTIONS	BY	CH'D	CCO#
1	05/04/07	W2 CAP BEAM ISD RESOLUTION	JD	AS	34S1
0	07/21/06	W2 CAP BEAM ISD	JD	AS	23

REVISIONS

CONTRACT CHANGE ORDER NO. _____
SHEET ____ OF ____

100 % PS&E

ALL DIMENSIONS ARE IN MILLIMETERS UNLESS OTHERWISE SHOWN

SAN FRANCISCO OAKLAND BAY BRIDGE
EAST SPAN SEISMIC SAFETY PROJECT
SELF-ANCHORED SUSPENSION BRIDGE
(SUPERSTRUCTURE & TOWER)

W2 CAP BEAM REINFORCEMENT DETAILS NO. 30

R. Valizadeh/V. Toan/Y.L./W.L./F.C.
DESIGN OVERSIGHT
SIGN OFF DATE 05/04/07

	BY	CHECKED
DESIGN	J. Duxbury	A. Sanjines
DETAILS	J. Duxbury	A. Sanjines
QUANTITIES	N. Vo	J. Duxbury

PREPARED FOR THE STATE OF CALIFORNIA DEPARTMENT OF TRANSPORTATION

R. Manzanarez
PROJECT ENGINEER

BRIDGE NO. 34-0006L/R
KILOMETER POST 13.2/13.9

CU 04
EA 0120F1

DISREGARD PRINTS BEARING EARLIER REVISION DATES 07/21/06

SHEET 080S6R1 OF

Rev. Date: 5-18-98

ORIGINAL SCALE IN MILLIMETERS FOR REDUCED PLANS 0 10 20 30 40 50 60 70 80 90 100

FILE => I:\bb\04-012001\sas\contract plans and cco\cco\in progress\cco#34s1\aecap29r-s.dgn

USERNAME => ptram DATE PLOTTED => 10 MAY 2007 TIME PLOTTED => 12:04:58

NOTES:

1. For Section A-A thru C-C, see "W2 Cap Beam Reinforcement Details No.32" sheet.
2. For reinforcement spacing, see "W2 Cap Beam Reinforcement Details No.30" sheet.
3. At the Contractor's option, the top and bottom layers of 29HT02 bars may be placed on either side of of the 29JL01 and 29JL05 bars.
4. At the Contractor's option, groups of 6#29 HV bars may be substituted with 4#32 HV bars, typical. △1

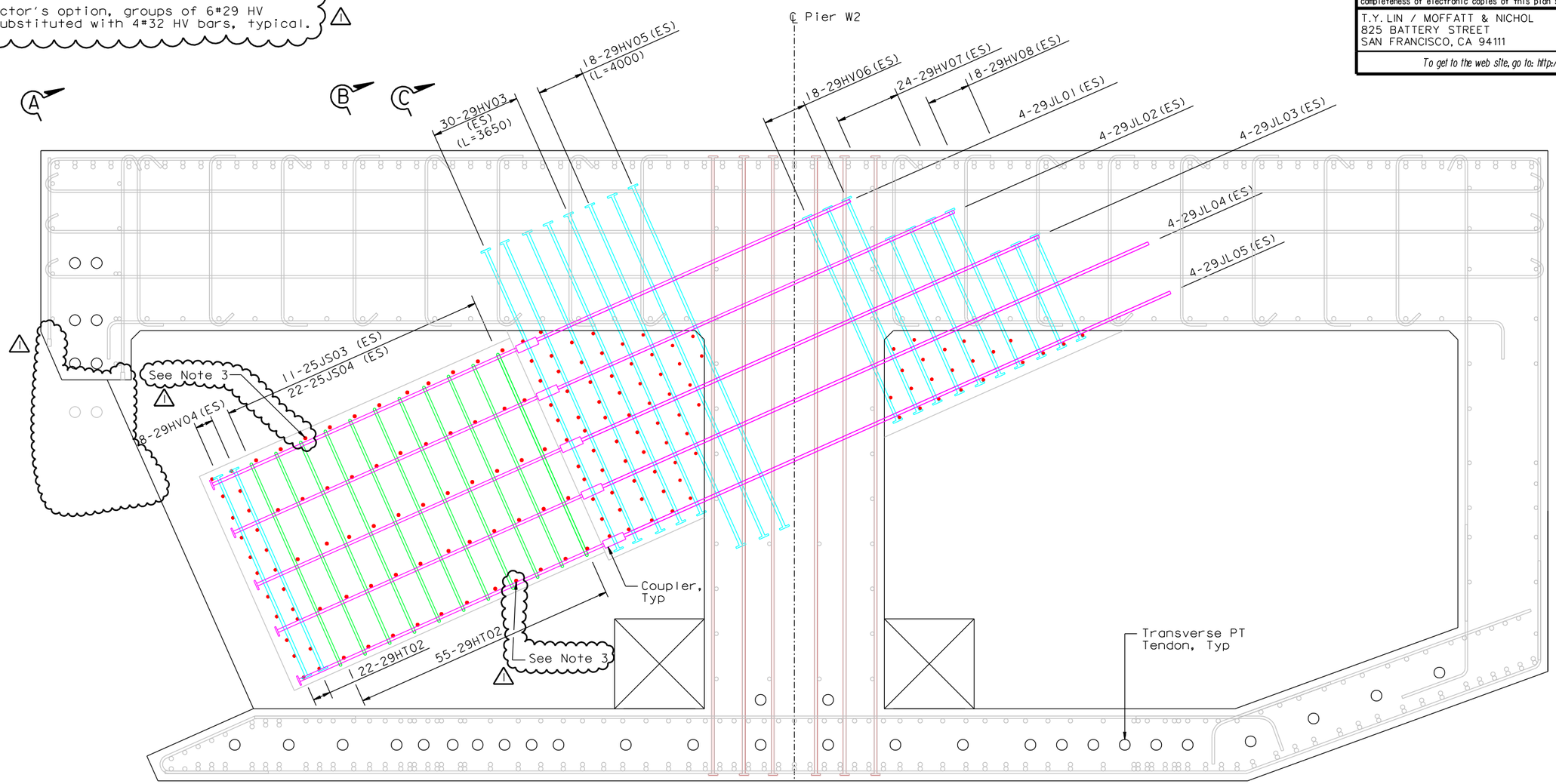

JACKING SADDLE REINFORCEMENT

(Jacking Frame At Support Block)

1:25

MARK	DATE	DESCRIPTIONS	BY	CH'D	CCO#
△1	05/04/07	W2 CAP BEAM ISD RESOLUTION	JD	AS	34S1
△0	07/21/06	W2 CAP BEAM ISD	JD	AS	23

REVISIONS

CONTRACT CHANGE ORDER NO. _____

SHEET ____ OF ____

100 % PS&E

ALL DIMENSIONS ARE IN MILLIMETERS UNLESS OTHERWISE SHOWN

DIST.	COUNTY	ROUTE	KILOMETER POST TOTAL PROJECT	SHEET NO.	TOTAL SHEETS
04	SF	80	13.2/13.9	497S7R1	1204

Caltrans Metric

REGISTERED ENGINEER - CIVIL

07-21-06

PLANS APPROVAL DATE

REGISTERED PROFESSIONAL ENGINEER James P.Duxbury No. C 64677 Exp. 06/30/07 CIVIL STATE OF CALIFORNIA

The State of California or its officers or agents shall not be responsible for the accuracy or completeness of electronic copies of this plan sheet.

T.Y. LIN / MOFFATT & NICHOL
825 BATTERY STREET
SAN FRANCISCO, CA 94111

To get to the web site, go to: http://www.dot.ca.gov

SAN FRANCISCO OAKLAND BAY BRIDGE
EAST SPAN SEISMIC SAFETY PROJECT
SELF-ANCHORED SUSPENSION BRIDGE
(SUPERSTRUCTURE & TOWER)

W2 CAP BEAM REINFORCEMENT DETAILS NO.31

R. Valizadeh/V.Toan/Y.L./W.L./F.C.
DESIGN OVERSIGHT
Y. Liu
SIGN OFF DATE 05/04/07

Rev. Date: 5-18-98

	BY	CHECKED
DESIGN	J. Duxbury	A. Sanjines
DETAILS	J. Duxbury	A. Sanjines
QUANTITIES	N. Vo	J. Duxbury

PREPARED FOR THE STATE OF CALIFORNIA DEPARTMENT OF TRANSPORTATION

R. Manzanarez
PROJECT ENGINEER

BRIDGE NO. 34-0006L/R
KILOMETER POST 13.2/13.9

CU 04
EA 0120F1

ORIGINAL SCALE IN MILLIMETERS FOR REDUCED PLANS 0 10 20 30 40 50 60 70 80 90 100

DISREGARD PRINTS BEARING EARLIER REVISION DATES 07/21/06

REVISION DATES (PRELIMINARY STAGE ONLY)

SHEET 080S7R1 OF

FILE => I:\bb\04-012001\sas\contract plans and cco\cco\in progress\cco#34s1\aecap30r-s.dgn

USERNAME => ptom DATE PLOTTED => 22 MAY 2007 TIME PLOTTED => 11:59:22

MARK	DATE	DESCRIPTIONS	BY	CH'D	CCO#
1	05/04/07	W2 CAP BEAM ISD RESOLUTION	JD	AS	34S1
0	07/21/06	W2 CAP BEAM ISD	JD	AS	23

REVISIONS

CONTRACT CHANGE ORDER NO. _____
SHEET ____ OF ____

NOTES:

1. Top mat reinforcement not shown for clarity. See "W2 Cap Beam Reinforcement Details No.2 to No.8" sheets.
2. Bottom mat reinforcement not shown for clarity. See "W2 Cap Beam Reinforcement Details No.9 to No.18" sheets.
3. Diaphragm reinforcement not shown for clarity. See "W2 Cap Beam Reinforcement Details No.26 to No.29" sheets.
4. Horizontal and vertical stirrup reinforcement not shown for clarity. See "W2 Cap Beam Reinforcement Details No.40 to No.43" sheets.
5. At the Contractor's option, #29 HV bars may be oriented parallel to the diaphragm reinforcement. The corresponding #29 JL bars and the #25 JS bars may also be shifted to accommodate this orientation.
6. At the Contractor's option, 6#29 HV bars may be substituted with 4 #32 HV bars and oriented parallel to the diaphragm reinforcement. The corresponding #29 JL bars and #25 JS bars may also be shifted to accommodate this orientation.
7. At the Contractor's option, 9#29 HV01 and HV02 bars may be substituted with 6#36 HV01 and HV02 bars.

Caltrans Metric

DIST.	COUNTY	ROUTE	KILOMETER POST TOTAL PROJECT	SHEET NO.	TOTAL SHEETS
04	SF	80	13.2/13.9	497S8R1	1204

REGISTERED ENGINEER - CIVIL
07-21-06
PLANS APPROVAL DATE

REGISTERED PROFESSIONAL ENGINEER James P.Duxbury No. C 64677 Exp. 06/30/07 CIVIL STATE OF CALIFORNIA

The State of California or its officers or agents shall not be responsible for the accuracy or completeness of electronic copies of this plan sheet.

T.Y. LIN / MOFFATT & NICHOL
825 BATTERY STREET
SAN FRANCISCO, CA 94111

To get to the web site, go to: http://www.dot.ca.gov

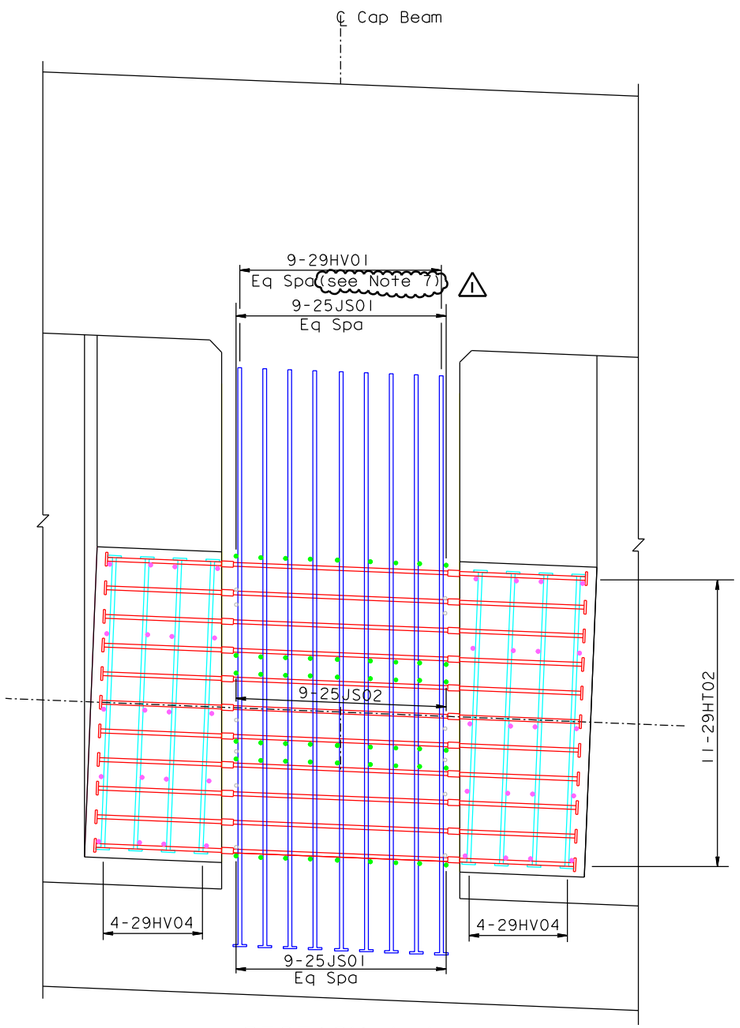

SECTION A-A

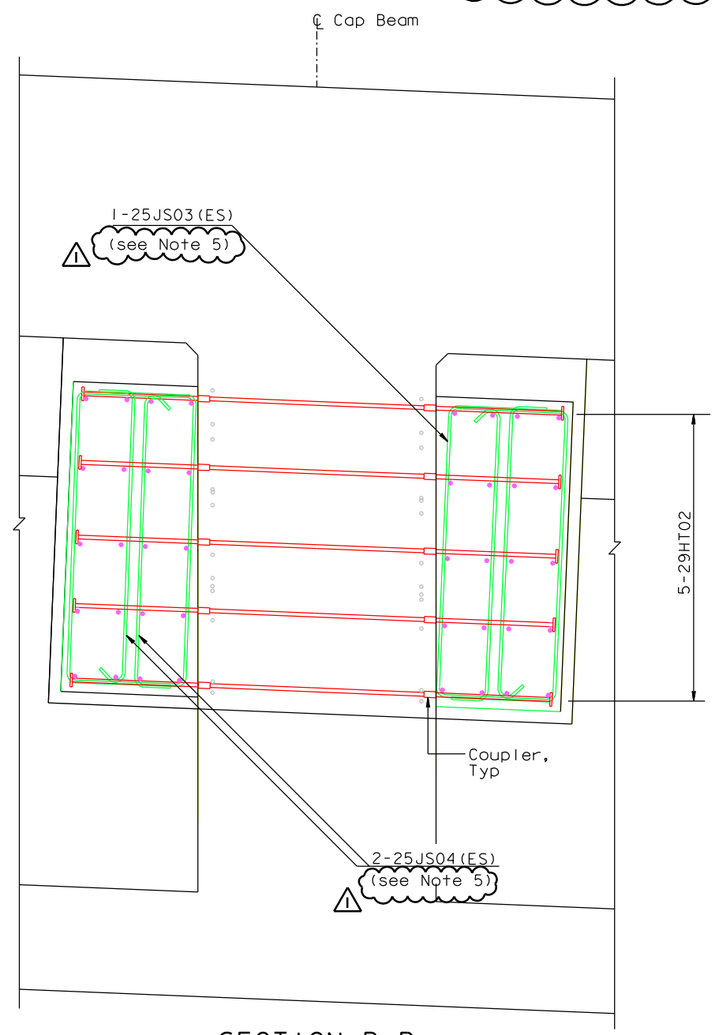

SECTION B-B

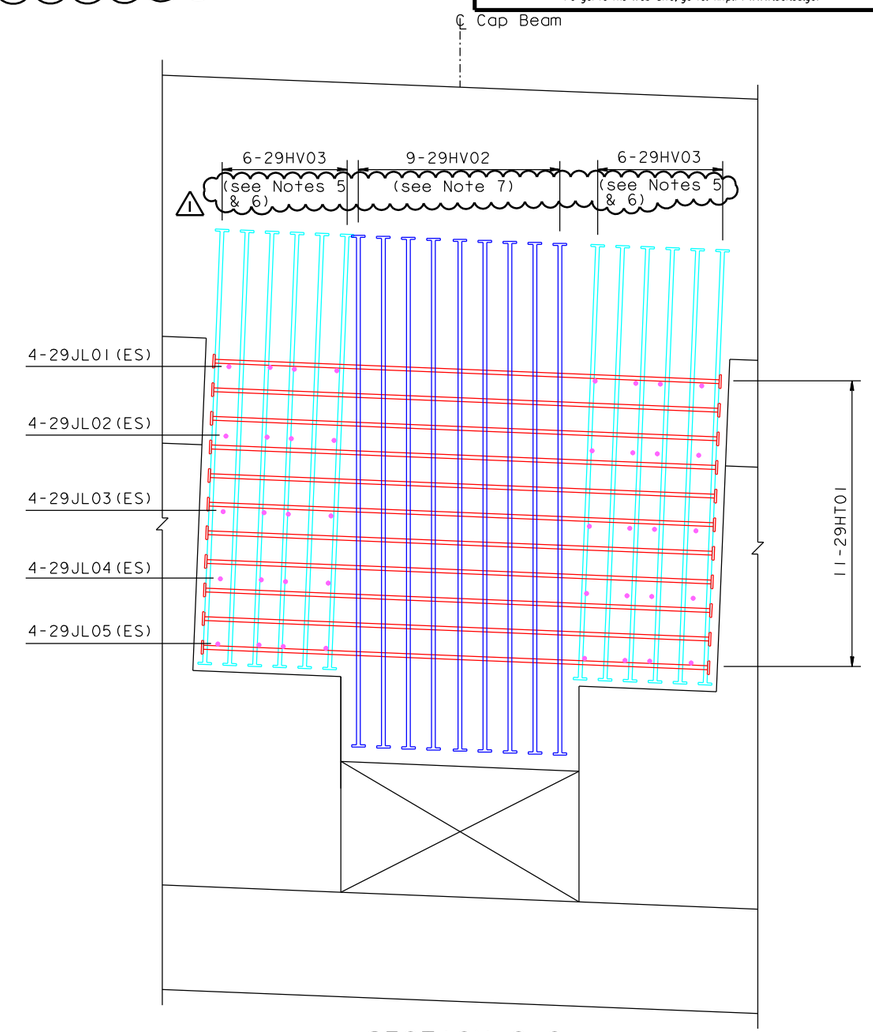

SECTION C-C

JACKING SADDLE REINFORCEMENT
1:30

ALL DIMENSIONS ARE IN MILLIMETERS UNLESS OTHERWISE SHOWN

R. Valizadeh/V.Toan/Y.L./W.L./F.C.
DESIGN OVERSIGHT
SIGN OFF DATE 05/04/07

	BY	CHECKED
DESIGN	J. Duxbury	A. Sanjines
DETAILS	J. Duxbury	A. Sanjines
QUANTITIES	N. Vo	J. Duxbury

PREPARED FOR THE STATE OF CALIFORNIA DEPARTMENT OF TRANSPORTATION

R. Manzanarez
PROJECT ENGINEER

BRIDGE NO. 34-0006L/R
KILOMETER POST 13.2/13.9

SAN FRANCISCO OAKLAND BAY BRIDGE
EAST SPAN SEISMIC SAFETY PROJECT
SELF-ANCHORED SUSPENSION BRIDGE
(SUPERSTRUCTURE & TOWER)

W2 CAP BEAM REINFORCEMENT DETAILS NO. 32

Rev. Date: 5-18-98

ORIGINAL SCALE IN MILLIMETERS FOR REDUCED PLANS 0 10 20 30 40 50 60 70 80 90 100

CU 04
EA 0120F1

DISREGARD PRINTS BEARING EARLIER REVISION DATES

REVISION DATES (PRELIMINARY STAGE ONLY) 07/21/06

SHEET 080S8R1 OF

FILE => $REQUEST

100% PS&E

USERNAME => $USER DATE PLOTTED => $DATE TIME PLOTTED => $TIME

DIST.	COUNTY	ROUTE	KILOMETER POST TOTAL PROJECT	SHEET NO.	TOTAL SHEETS
04	SF	80	13.2/13.9	497S9R1	1204

REGISTERED ENGINEER - CIVIL

07-21-06

PLANS APPROVAL DATE

REGISTERED PROFESSIONAL ENGINEER James P.Duxbury No. C 64677 Exp. 06/30/07 CIVIL STATE OF CALIFORNIA

The State of California or its officers or agents shall not be responsible for the accuracy or completeness of electronic copies of this plan sheet.

T.Y. LIN / MOFFATT & NICHOL
825 BATTERY STREET
SAN FRANCISCO, CA 94111

To get to the web site, go to: http://www.dot.ca.gov

Caltrans Metric

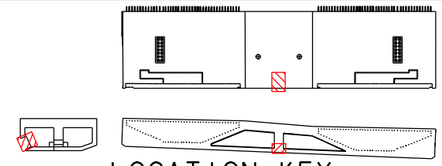

LOCATION KEY
NTS

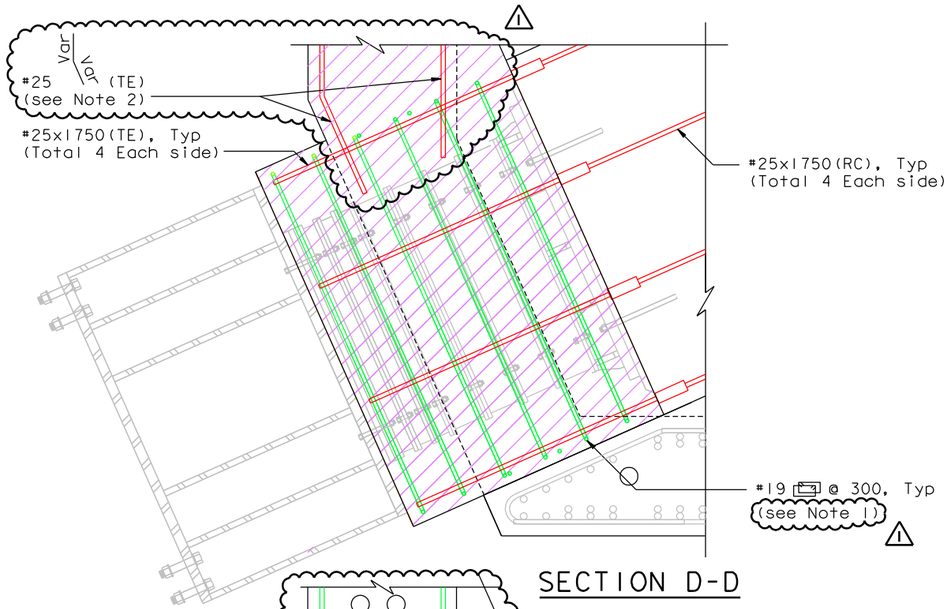

SECTION D-D

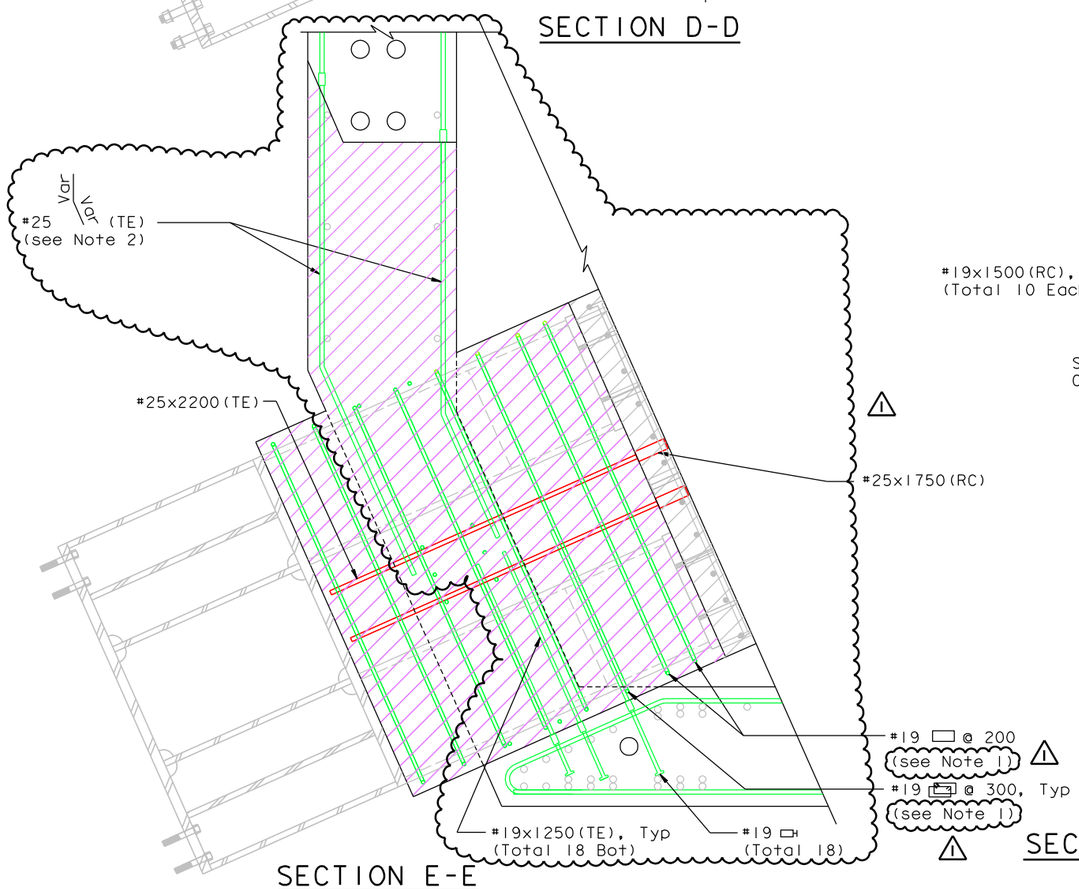

SECTION E-E

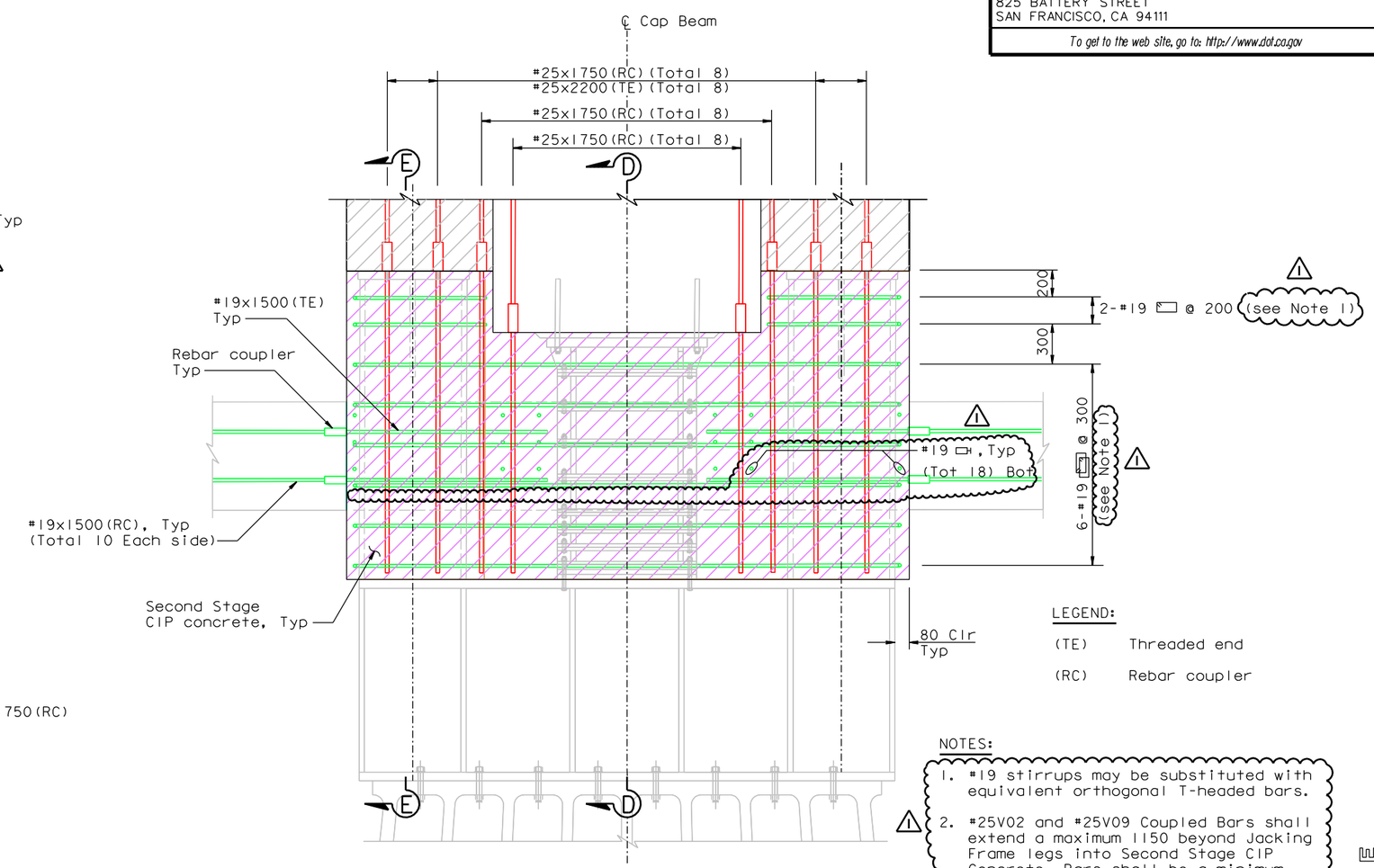

JACKING FRAME PLAN

LEGEND:

(TE) Threaded end

(RC) Rebar coupler

NOTES:

1. #19 stirrups may be substituted with equivalent orthogonal T-headed bars.
2. #25V02 and #25V09 Coupled Bars shall extend a maximum 1150 beyond Jacking Frame legs into Second Stage CIP Concrete. Bars shall be a minimum 50 mm clear of Jacking Frame Steel.

SECOND STAGE CIP CONCRETE REINFORCEMENT
(At Jacking Frame)
1:20

ALL DIMENSIONS ARE IN MILLIMETERS UNLESS OTHERWISE SHOWN

MARK	DATE	DESCRIPTIONS	BY	CH'D	CCO#
1	05/04/07	W2 CAP BEAM ISD RESOLUTION	JD	AS	34S1
0	07/21/06	W2 CAP BEAM ISD	JD	AS	23

REVISIONS

CONTRACT CHANGE ORDER NO. _____
SHEET ___ OF ___

100 % PS&E

DATE PLOTTED => 10 MAY 2007 TIME PLOTTED => 12:07:56

SAN FRANCISCO OAKLAND BAY BRIDGE
EAST SPAN SEISMIC SAFETY PROJECT
SELF-ANCHORED SUSPENSION BRIDGE
(SUPERSTRUCTURE & TOWER)

W2 CAP BEAM REINFORCEMENT DETAILS NO. 33

R. Valizadeh/V. Toan/Y.L./W.L./F.C.
DESIGN OVERSIGHT
SIGN OFF DATE 05/04/07

DESIGN	BY J. Duxbury	CHECKED A. Sanjines
DETAILS	BY J. Duxbury	CHECKED A. Sanjines
QUANTITIES	BY N. Vo	CHECKED J. Duxbury

PREPARED FOR THE STATE OF CALIFORNIA DEPARTMENT OF TRANSPORTATION

R. Manzanarez
PROJECT ENGINEER

BRIDGE NO. 34-0006L/R
KILOMETER POST 13.2/13.9

Rev. Date: 5-18-98

ORIGINAL SCALE IN MILLIMETERS FOR REDUCED PLANS 0 10 20 30 40 50 60 70 80 90 100

CU 04
EA 0120F1

DISREGARD PRINTS BEARING EARLIER REVISION DATES 07/21/06

REVISION DATES (PRELIMINARY STAGE ONLY)

SHEET 080S9R1 OF

FILE => I:\bb\04-012001\sas\contract plans and cco\cco\in progress\cco#34s1\oecap33r-c.dgn

USERNAME => ptom

NOTES:

1. Top mat reinforcement not shown for clarity. See "W2 Cap Beam Reinforcement Details No.2 to No.8" sheets.
2. Bottom mat reinforcement not shown for clarity. See "W2 Cap Beam Reinforcement Details No.9 to No.18" sheets.
3. West Face reinforcement not shown for clarity. See "W2 Cap Beam Reinforcement Details No.19 to No.25" sheets.
4. Blockout reinforcement not shown for clarity. See "W2 Cap Beam Blockout Details" sheets.
5. Coupled Skin Reinforcement shall be spaced to allow placement through the Jacking Frame legs and blocking. Jacking Saddle Frame Opening Second Stage CIP Concrete Reinforcement not shown. See "W2 Cap Beam Reinforcement Details No.33" sheet. △1

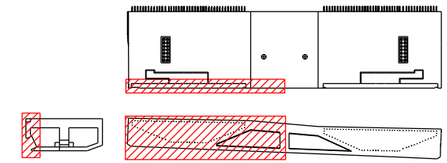

LOCATION KEY
NTS

Caltrans Metric

DIST.	COUNTY	ROUTE	KILOMETER POST TOTAL PROJECT	SHEET NO.	TOTAL SHEETS
04	SF	80	13.2/13.9	497S10R1	1204

REGISTERED ENGINEER - CIVIL
07-21-06
PLANS APPROVAL DATE
REGISTERED PROFESSIONAL ENGINEER James P.Duxbury No. C 64677 Exp. 06/30/07 CIVIL STATE OF CALIFORNIA

The State of California or its officers or agents shall not be responsible for the accuracy or completeness of electronic copies of this plan sheet.

T.Y. LIN / MOFFATT & NICHOL
825 BATTERY STREET
SAN FRANCISCO, CA 94111

To get to the web site, go to: http://www.dot.ca.gov

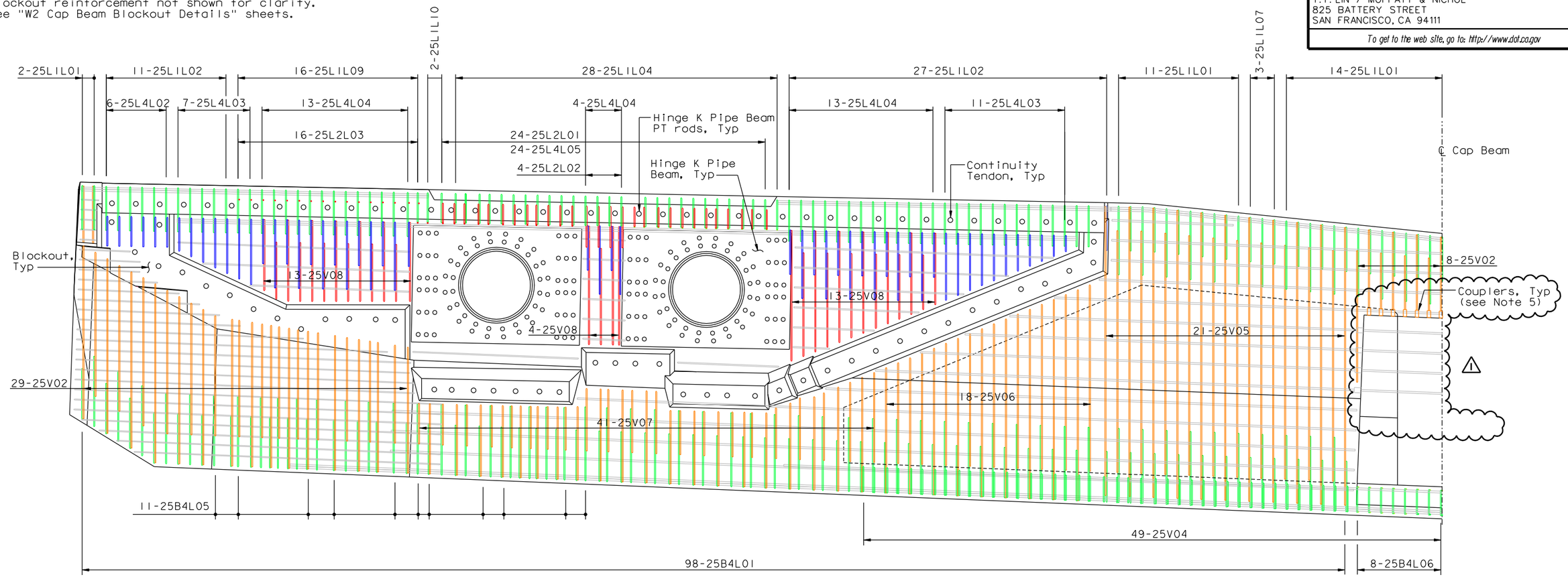

WEST FACE SKIN REINFORCEMENT (NORTH) (EXTERIOR)
(Looking East) (South Side Similar)
1:50

MARK	DATE	DESCRIPTIONS	BY	CH'D	CCO#
1	05/04/07	W2 CAP BEAM ISD RESOLUTION	JD	AS	34S1
0	07/21/06	W2 CAP BEAM ISD	JD	AS	23

REVISIONS

CONTRACT CHANGE ORDER NO. _____
SHEET ____ OF ____

100 % PS&E

ALL DIMENSIONS ARE IN MILLIMETERS UNLESS OTHERWISE SHOWN

SAN FRANCISCO OAKLAND BAY BRIDGE
EAST SPAN SEISMIC SAFETY PROJECT
SELF-ANCHORED SUSPENSION BRIDGE
(SUPERSTRUCTURE & TOWER)

W2 CAP BEAM REINFORCEMENT DETAILS NO. 34

R. Valizadeh/V. Toan/Y.L./W.L./F.C.
DESIGN OVERSIGHT
Y. Liu
SIGN OFF DATE 05/04/07

	BY	CHECKED
DESIGN	J. Duxbury	A. Sanjines
DETAILS	J. Duxbury	A. Sanjines
QUANTITIES	N. Vo	J. Duxbury

PREPARED FOR THE STATE OF CALIFORNIA DEPARTMENT OF TRANSPORTATION

R. Manzanarez
PROJECT ENGINEER

BRIDGE NO. 34-0006L/R
KILOMETER POST 13.2/13.9

Rev. Date: 5-18-98

ORIGINAL SCALE IN MILLIMETERS FOR REDUCED PLANS 0 10 20 30 40 50 60 70 80 90 100

CU 04
EA 0120F1

DISREGARD PRINTS BEARING EARLIER REVISION DATES 07/21/06

SHEET 080S10R1 OF

FILE => I:\bb\04-012001\sas\contract plans and cco\cco\in progress\cco#34s1\oecap32r-s.dgn

USERNAME => ptom DATE PLOTTED => 22 MAY 2007 TIME PLOTTED => 12:02:34

DIST.	COUNTY	ROUTE	KILOMETER POST TOTAL PROJECT	SHEET NO.	TOTAL SHEETS
04	SF	80	13.2/13.9	497S16R1	1204

REGISTERED ENGINEER - CIVIL

07-21-06

PLANS APPROVAL DATE

REGISTERED PROFESSIONAL ENGINEER James P. Duxbury No. C 64677 Exp. 06/30/07 CIVIL STATE OF CALIFORNIA

The State of California or its officers or agents shall not be responsible for the accuracy or completeness of electronic copies of this plan sheet.

T.Y. LIN / MOFFATT & NICHOL
825 BATTERY STREET
SAN FRANCISCO, CA 94111

To get to the web site, go to: http://www.dot.ca.gov

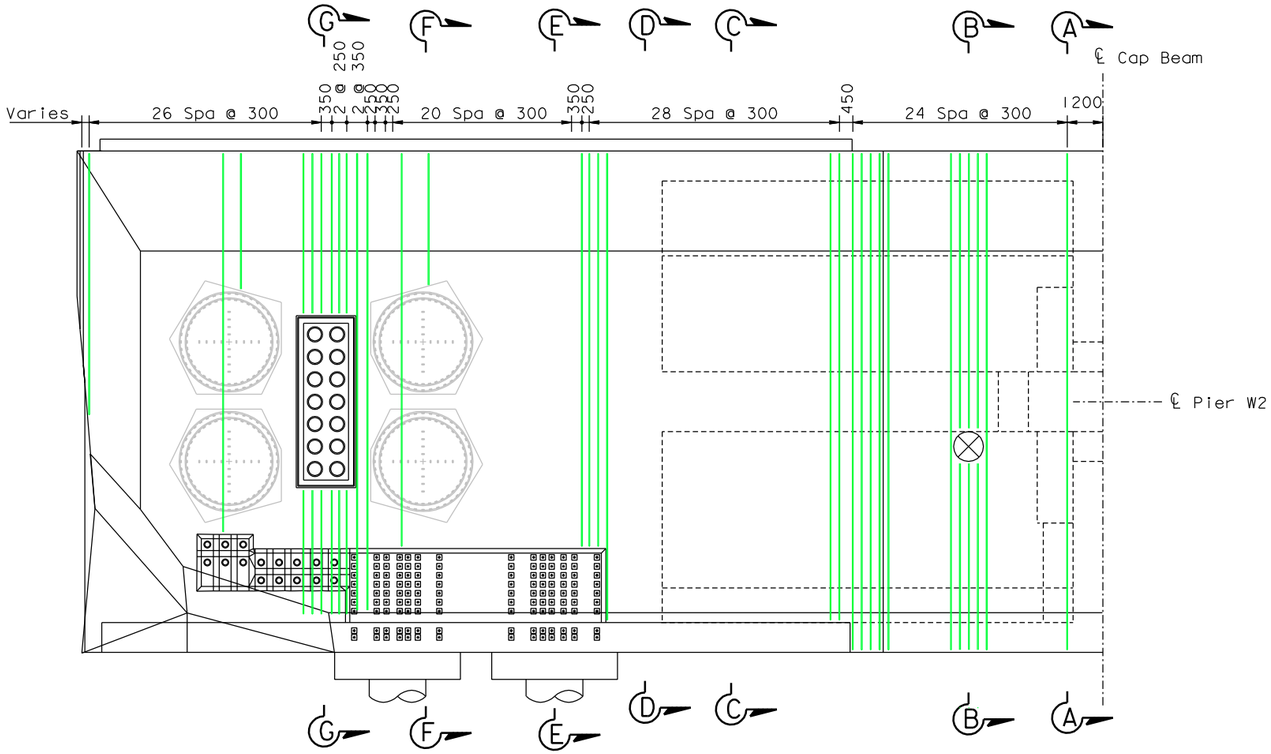

HORIZONTAL STIRRUP REINFORCEMENT PLAN (NORTH) (LAYERS 4-15)

(South Side Similar)

1:100

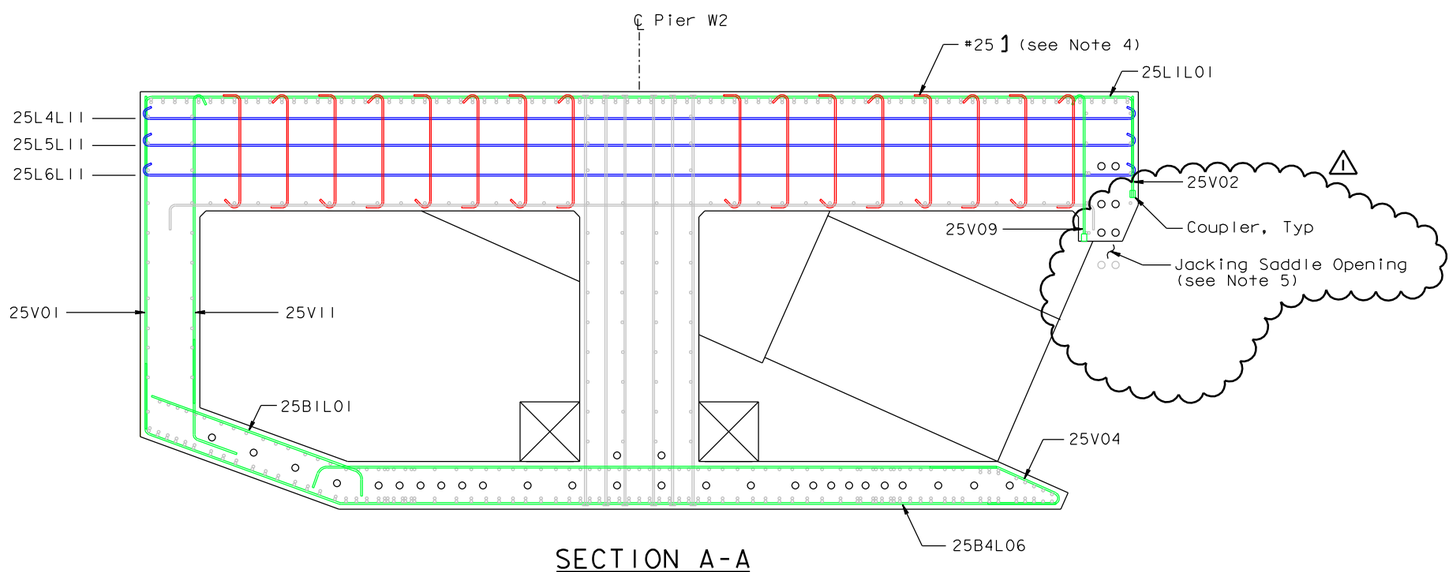

SECTION A-A

1:50

NOTES:

1. For Section B-B and C-C, see "W2 Cap Beam Reinforcement Details No.41" sheet.
2. For Section D-D and E-E, see "W2 Cap Beam Reinforcement Details No.42" sheet.
3. For Section F-F and G-G, see "W2 Cap Beam Reinforcement Details No.43" sheet.
4. For Top Slab Stirrup Plan, see "W2 Cap Beam Reinforcement Details No.8" sheet.
5. For Jacking Saddle Opening details, see "W2 Cap Beam Dimension Details No.3" sheet.

MARK	DATE	DESCRIPTIONS	BY	CH'D	CCO#
1	05/04/07	W2 CAP BEAM ISD RESOLUTION	JD	AS	34S1
0	07/21/06	W2 CAP BEAM ISD	JD	AS	23

REVISIONS

CONTRACT CHANGE ORDER NO. _____
SHEET ____ OF ____

100 % PS&E

ALL DIMENSIONS ARE IN MILLIMETERS UNLESS OTHERWISE SHOWN

R. Valizadeh/V. Toan/Y.L./W.L./F.C.
DESIGN OVERSIGHT
SIGN OFF DATE 05/04/07

DESIGN	BY J. Duxbury	CHECKED A. Sanjines	
DETAILS	BY J. Duxbury	CHECKED A. Sanjines	
QUANTITIES	BY N. Vo	CHECKED J. Duxbury	

Rev. Date: 5-18-98

PREPARED FOR THE STATE OF CALIFORNIA DEPARTMENT OF TRANSPORTATION

R. Manzanarez
PROJECT ENGINEER

BRIDGE NO. 34-0006L/R
KILOMETER POST 13.2/13.9

SAN FRANCISCO OAKLAND BAY BRIDGE
EAST SPAN SEISMIC SAFETY PROJECT
SELF-ANCHORED SUSPENSION BRIDGE
(SUPERSTRUCTURE & TOWER)

W2 CAP BEAM REINFORCEMENT DETAILS NO. 40

ORIGINAL SCALE IN MILLIMETERS FOR REDUCED PLANS 0 10 20 30 40 50 60 70 80 90 100

CU 04
EA 0120F1

DISREGARD PRINTS BEARING EARLIER REVISION DATES 07/21/06

REVISION DATES (PRELIMINARY STAGE ONLY)

SHEET 080S16R1 OF

FILE => I:\bb\04-012001\sas\contract plans and cco\cco\in progress\cco#34s1\decap39r-s.dgn

USERNAME => ptom DATE PLOTTED => 10 MAY 2007 TIME PLOTTED => 12:06:55

DIST.	COUNTY	ROUTE	KILOMETER POST TOTAL PROJECT	SHEET NO.	TOTAL SHEETS
04	SF	80	13.2/13.9	497S20R1	1204

REGISTERED ENGINEER - CIVIL

07-21-06

PLANS APPROVAL DATE

REGISTERED PROFESSIONAL ENGINEER James P.Duxbury No. C 64677 Exp. 06/30/07 CIVIL STATE OF CALIFORNIA

The State of California or its officers or agents shall not be responsible for the accuracy or completeness of electronic copies of this plan sheet.

T.Y. LIN / MOFFATT & NICHOL
825 BATTERY STREET
SAN FRANCISCO, CA 94111

To get to the web site, go to: http://www.dot.ca.gov

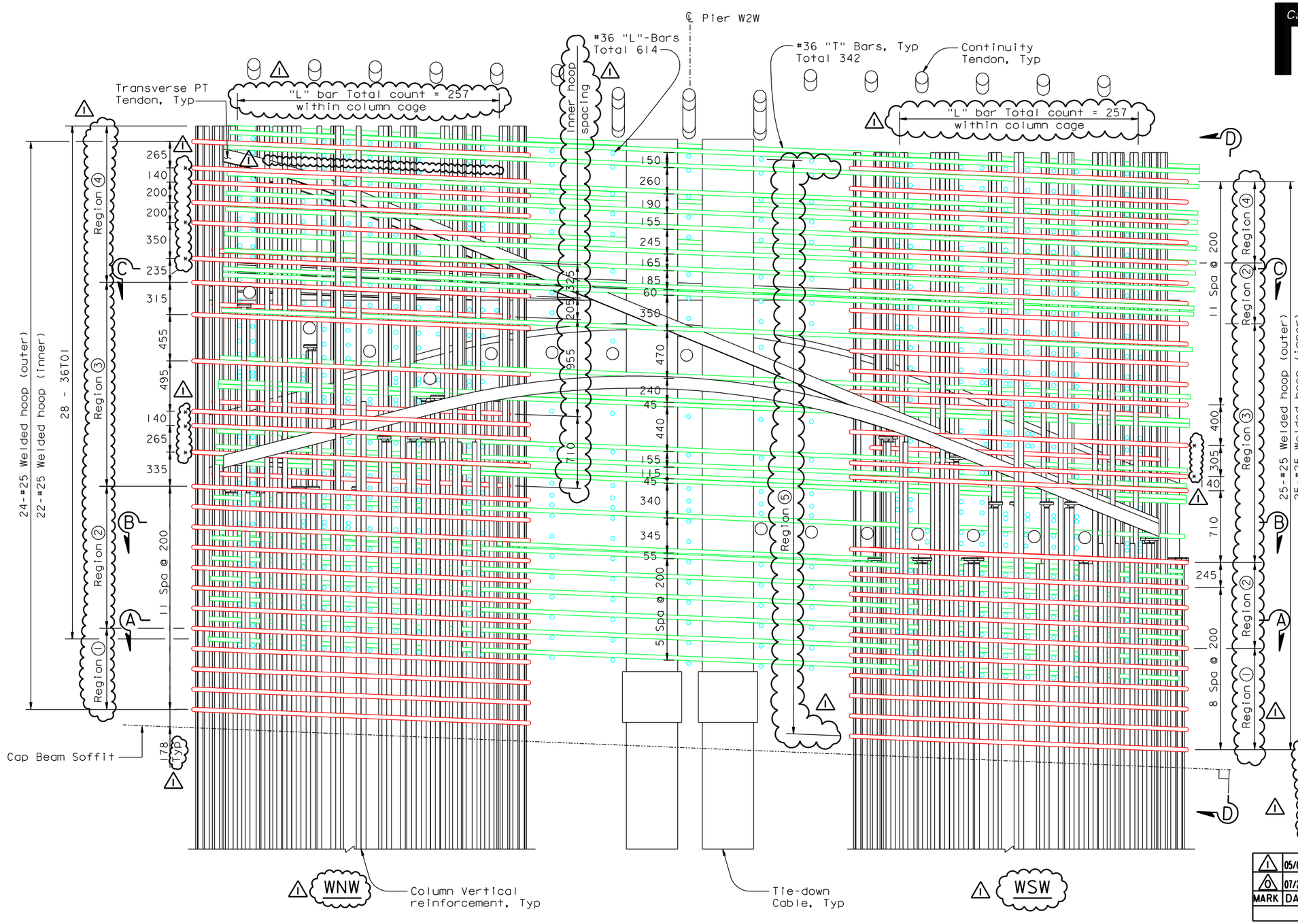

COLUMN REGION REINFORCEMENT (NORTH ELEVATION)

(Looking East)

1:20

ALL DIMENSIONS ARE IN MILLIMETERS UNLESS OTHERWISE SHOWN

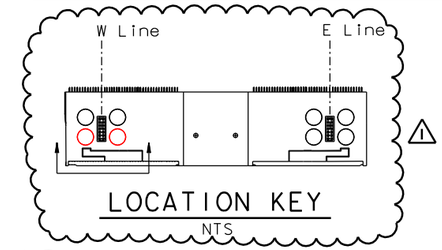

LOCATION KEY

NTS

LEGEND:

* - Indicates no inner hoop at specified location

Region ①: Up to 12-"L" bars may placed between hoops.

Region ②: "L" bars Max/Min=12/6 count between hoops.

Region ③: "L" bars Total count: WNW=110; WSW=160.

Region ④: Up to 6-"L" bars may be placed between hoops to obtain total bar count.

Region ⑤: "L" bar Total count between column cages=100.

NOTES:

1. For Section A-A thru C-C, see "W2 Cap Beam Reinforcement Details No.46" sheet.
2. For Elevation D-D, see "W2 Cap Beam Reinforcement Details No.47" sheet.
3. Column vertical reinforcement shall be cut to avoid PT ducts. Maximum clearance distance between top of bar and PT duct is 200.
4. Region ③ hoop spacing may be adjusted within 4x bar diameters.
5. Limits for Region ① to Region ⑤ are provided for general guidance in placing the "T" & "L" bars. Region ① thru Region ④ are within the column cage while Region ⑤ is located between the column cages.

MARK	DATE	DESCRIPTIONS	BY	CH'D	CCO#
1	05/04/07	W2 CAP BEAM ISD RESOLUTION	JD	AS	34S1
0	07/21/06	W2 CAP BEAM ISD	JD	AS	23

REVISIONS

CONTRACT CHANGE ORDER NO. _____
SHEET ____ OF ____

100 % PS&E

DATE PLOTTED => 09 MAY 2007 TIME PLOTTED => 15:45:36

R. Valizadeh/V.Toan/Y.L./W.L./F.C.
DESIGN OVERSIGHT
Roya Valizadeh / Vong Toan / Y. Liu
SIGN OFF DATE 05/04/07

DESIGN	BY J. Duxbury	CHECKED A. Sanjines	
DETAILS	BY J. Duxbury	CHECKED A. Sanjines	
QUANTITIES	BY N. Vo	CHECKED J. Duxbury	

PREPARED FOR THE STATE OF CALIFORNIA DEPARTMENT OF TRANSPORTATION

R. Manzanarez
PROJECT ENGINEER

BRIDGE NO. 34-0006L/R
KILOMETER POST 13.2/13.9

SAN FRANCISCO OAKLAND BAY BRIDGE
EAST SPAN SEISMIC SAFETY PROJECT
SELF-ANCHORED SUSPENSION BRIDGE
(SUPERSTRUCTURE & TOWER)

W2 CAP BEAM REINFORCEMENT DETAILS NO. 44

Rev. Date: 5-18-98

ORIGINAL SCALE IN MILLIMETERS FOR REDUCED PLANS 0 10 20 30 40 50 60 70 80 90 100

CU 04
EA 0120F1

DISREGARD PRINTS BEARING EARLIER REVISION DATES

REVISION DATES (PRELIMINARY STAGE ONLY) 07/21/06

SHEET 080S20R1 OF

FILE => I:\bb\04-0120F1\sas\contract plans and cco\cco\in progress\cco#34s1\aecap43r-s.dgn

USERNAME => ptam

DIST.	COUNTY	ROUTE	KILOMETER POST TOTAL PROJECT	SHEET NO.	TOTAL SHEETS
04	SF	80	13.2/13.9	497S21R1	1204

REGISTERED ENGINEER - CIVIL

07-21-06
PLANS APPROVAL DATE

REGISTERED PROFESSIONAL ENGINEER James P.Duxbury No. C 64677 Exp. 06/30/07 CIVIL STATE OF CALIFORNIA

The State of California or its officers or agents shall not be responsible for the accuracy or completeness of electronic copies of this plan sheet.

T.Y. LIN / MOFFATT & NICHOL
825 BATTERY STREET
SAN FRANCISCO, CA 94111

To get to the web site, go to: http://www.dot.ca.gov

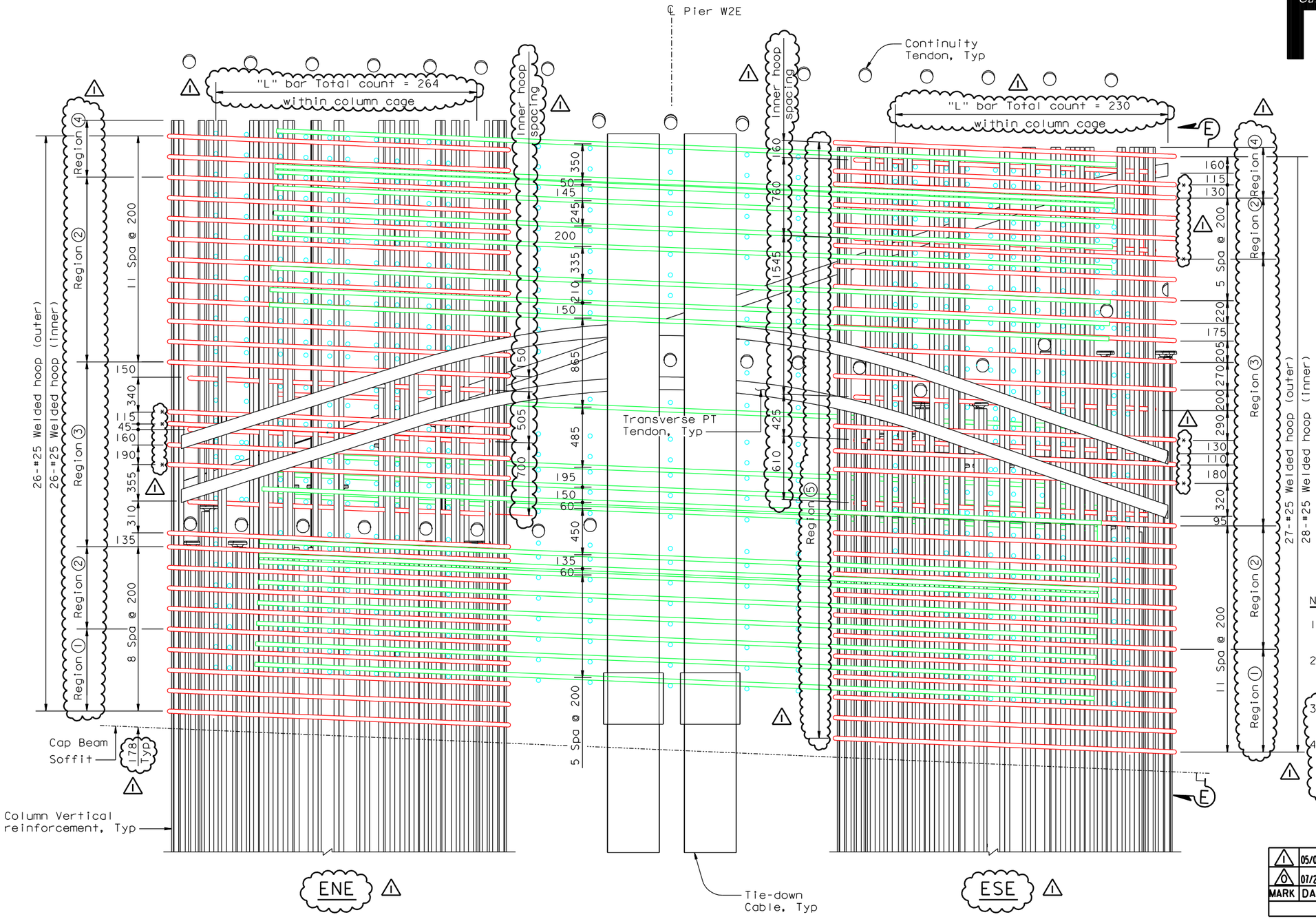

COLUMN REGION REINFORCEMENT (SOUTH ELEVATION)

(Looking East)
1:20

ALL DIMENSIONS ARE IN MILLIMETERS UNLESS OTHERWISE SHOWN

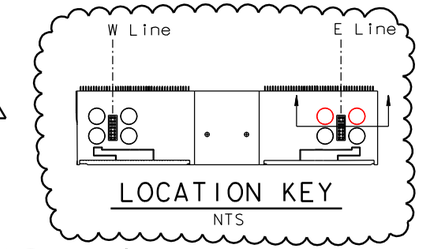

LOCATION KEY

NTS

LEGEND:

* - Indicates no inner hoop at specified location

Region 1: Up to 12-"L" bars may placed between hoops.

Region 2: "L" bars Max/Min=20/7 count between hoops.

Region 3: "L" bars Total count: ENE=53; ESE=88.

Region 4: Up to 8-"L" bars may be placed between hoops to obtain total bar count.

Region 5: "L" bar Total count between column cages=120.

NOTES:

1. For Elevation E-E, see "W2 Cap Beam Reinforcement Details No.47" sheet.
2. Column vertical reinforcement shall be cut to avoid PT ducts. Maximum clearance distance between top of bar and PT duct is 200.
3. Region 3 hoop spacing may be adjusted within 4x bar diameters.
4. Limits for Region 1 to Region 5 are provided for general guidance in placing the "T" & "L" bars. Region 1 thru Region 4 are within the column cage while Region 5 is located between the column cages.

MARK	DATE	DESCRIPTIONS	BY	CH'D	CCO#
1	05/04/07	W2 CAP BEAM ISD RESOLUTION	JD	AS	34S1
0	07/21/06	W2 CAP BEAM ISD	JD	AS	23

REVISIONS

CONTRACT CHANGE ORDER NO.
SHEET ____ OF ____

100% PS&E

DATE PLOTTED => 09 MAY 2007 TIME PLOTTED => 15:47:09

USERNAME => ptrom

R. Valizadeh/V.Toan/Y.L./W.L./F.C.
DESIGN OVERSIGHT
SIGN OFF DATE 05/04/07

Rev. Date: 5-18-98

	BY	CHECKED
DESIGN	J. Duxbury	A. Sanjines
DETAILS	J. Duxbury	A. Sanjines
QUANTITIES	N. Vo	J. Duxbury

ORIGINAL SCALE IN MILLIMETERS FOR REDUCED PLANS 0 10 20 30 40 50 60 70 80 90 100

PREPARED FOR THE STATE OF CALIFORNIA DEPARTMENT OF TRANSPORTATION

R. Manzanarez
PROJECT ENGINEER

CU 04
EA 0120F1

BRIDGE NO. 34-0006L/R
KILOMETER POST 13.2/13.9

DISREGARD PRINTS BEARING EARLIER REVISION DATES 07/21/06

SAN FRANCISCO OAKLAND BAY BRIDGE
EAST SPAN SEISMIC SAFETY PROJECT
SELF-ANCHORED SUSPENSION BRIDGE
(SUPERSTRUCTURE & TOWER)

W2 CAP BEAM REINFORCEMENT DETAILS NO. 45

SHEET 080S21R1 OF

FILE => I:\bb\04-012001\sas\contract plans and cco\cco\in progress\cco#34s1\oecap44r-s.dgn

DIST.	COUNTY	ROUTE	KILOMETER POST TOTAL PROJECT	SHEET NO.	TOTAL SHEETS
04	SF	80	13.2/13.9	497S22R1	1204

REGISTERED ENGINEER - CIVIL

07-21-06
PLANS APPROVAL DATE

REGISTERED PROFESSIONAL ENGINEER James P.Duxbury No. C 64677 Exp. 06/30/07 CIVIL STATE OF CALIFORNIA

The State of California or its officers or agents shall not be responsible for the accuracy or completeness of electronic copies of this plan sheet.

T.Y. LIN / MOFFATT & NICHOL
825 BATTERY STREET
SAN FRANCISCO, CA 94111

To get to the web site, go to: http://www.dot.ca.gov

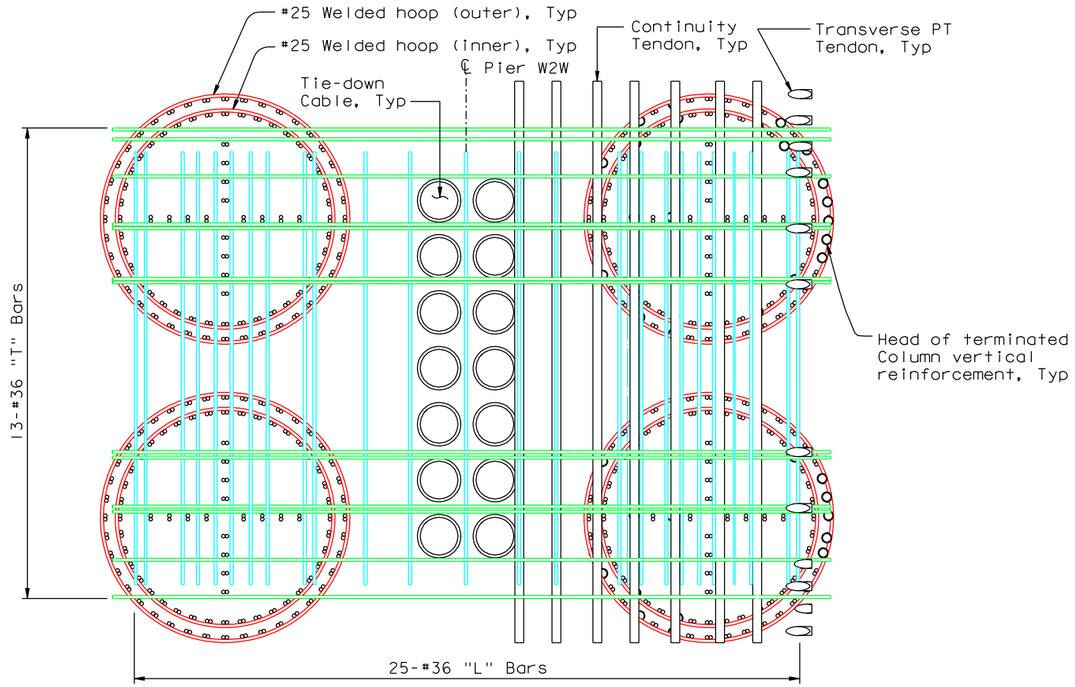

SECTION B-B

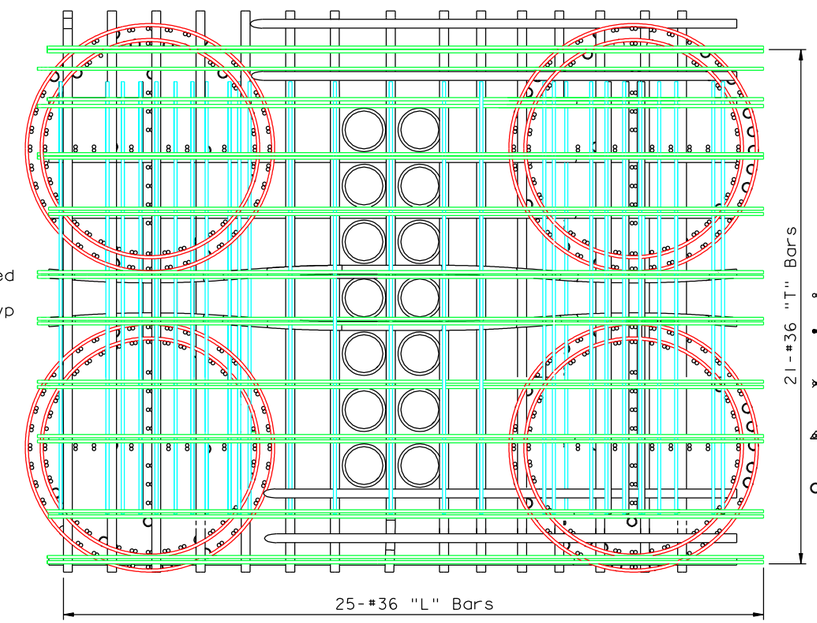

SECTION C-C

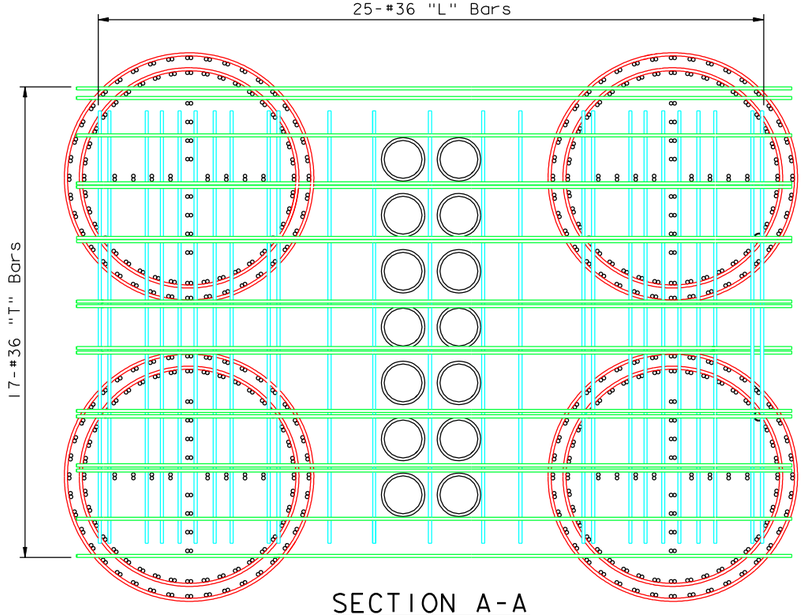

SECTION A-A

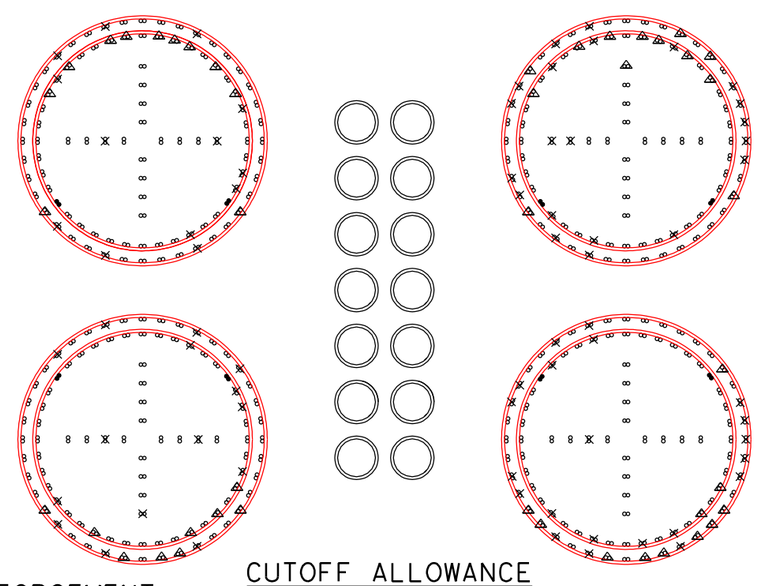

CUTOFF ALLOWANCE

COLUMN REGION REINFORCEMENT
(North Side Shown, South Side Similar)
1:40

LEGEND:

#43 bundled bar

Indicates #43 column reinforcement may be field cut below #43 Transverse cap beam reinforcement

Indicates #43 column reinforcement may be field cut below cap beam longitudinal PT duct

Indicates #43 column reinforcement may be field cut below cap beam transverse PTduct

Head of terminated column vertical reinforcement

NOTES:

1. Not all reinforcement shown for clarity.
2. Adjust reinforcement as required to clear column reinforcement.
3. Contractor may field cut existing column reinforcement identified in the cutoff allowance for column reinforcement detail.
4. Field cut #43 column reinforcement shall be fitted with field-installed round headed anchors, except as noted.
5. Prior to cutting any column reinforcement, the Contractor is required to submit locations and number of bars to be field cut for Engineer's review and approval.
6. For as-surveyed cutoff allowances for column vertical bundled bars see "W2 Cap Beam Reinforcement Details No.13A and 13B" sheets. (1)

MARK	DATE	DESCRIPTIONS	BY	CH'D	CCO#
1	05/04/07	W2 CAP BEAM ISD RESOLUTION	JD	AS	3451
0	07/21/06	W2 CAP BEAM ISD	JD	AS	23

REVISIONS

CONTRACT CHANGE ORDER NO. _____
SHEET ____ OF ____

ALL DIMENSIONS ARE IN MILLIMETERS UNLESS OTHERWISE SHOWN

R. Valizadeh/V.Toan/Y.L./W.L./F.C.
DESIGN OVERSIGHT
Ryan Valizadeh / Vong Toan / Y. Liu
SIGN OFF DATE 05/04/07

	BY	CHECKED
DESIGN	J. Duxbury	A. Sanjines
DETAILS	J. Duxbury	A. Sanjines
QUANTITIES	N. Vo	J. Duxbury

PREPARED FOR THE STATE OF CALIFORNIA DEPARTMENT OF TRANSPORTATION

R. Manzanarez
PROJECT ENGINEER

BRIDGE NO. 34-0006L/R
KILOMETER POST 13.2/13.9

SAN FRANCISCO OAKLAND BAY BRIDGE
EAST SPAN SEISMIC SAFETY PROJECT
SELF-ANCHORED SUSPENSION BRIDGE
(SUPERSTRUCTURE & TOWER)

W2 CAP BEAM REINFORCEMENT DETAILS NO. 46

Rev. Date: 5-18-98

ORIGINAL SCALE IN MILLIMETERS FOR REDUCED PLANS 0 10 20 30 40 50 60 70 80 90 100

CU 04
EA 0120F1

DISREGARD PRINTS BEARING EARLIER REVISION DATES 07/21/06

REVISION DATES (PRELIMINARY STAGE ONLY)

SHEET 080S22R1 OF

FILE => I:\bb\04-012001\sas\contract plans and cco\cco\in progress\cco#3451\aecap45r-s.dgn

100 % PS&E

DATE PLOTTED => 09 MAY 2007 TIME PLOTTED => 15:48:39

USERNAME => ptom

DIST.	COUNTY	ROUTE	KILOMETER POST TOTAL PROJECT	SHEET NO.	TOTAL SHEETS
04	SF	80	13.2/13.9	497S23A	1204

REGISTERED ENGINEER - CIVIL

05-04-07
PLANS APPROVAL DATE

REGISTERED PROFESSIONAL ENGINEER James P.Duxbury No. C 64677 Exp. 06/30/07 CIVIL STATE OF CALIFORNIA

The State of California or its officers or agents shall not be responsible for the accuracy or completeness of electronic copies of this plan sheet.

T.Y. LIN / MOFFATT & NICHOL
825 BATTERY STREET
SAN FRANCISCO, CA 94111

To get to the web site, go to: http://www.dot.ca.gov

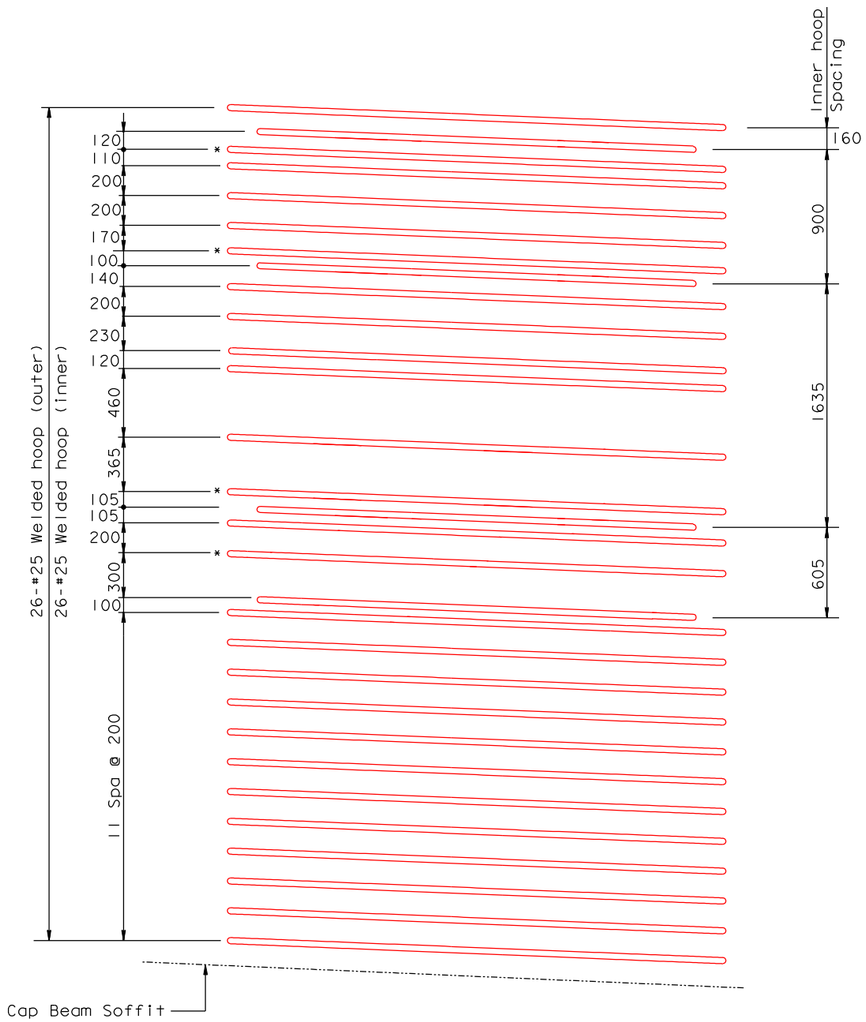

WNE

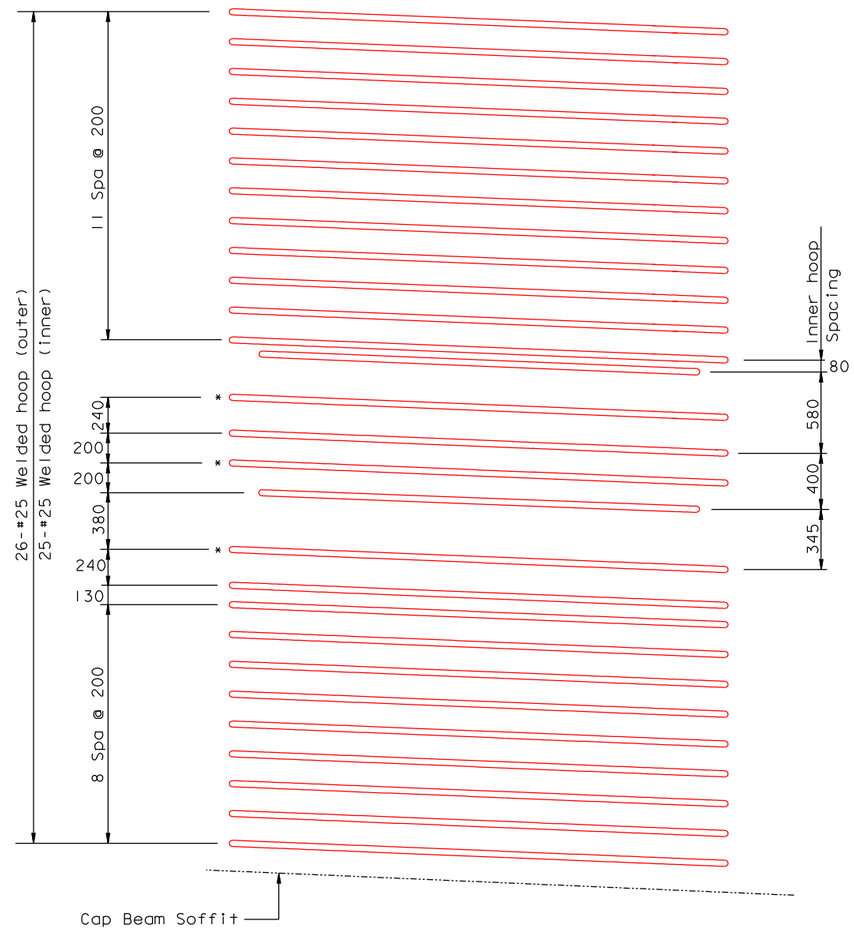

ENW

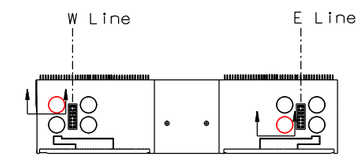

LOCATION KEY
NTS

LEGEND:

* - Indicates no inner hoop at specified location

COLUMN HOOP REINFORCEMENT
1:20

MARK	DATE	DESCRIPTIONS	BY	CH'D	CCO#
0	05/04/07	W2 CAP BEAM ISD RESOLUTION	JD	AS	34S1

REVISIONS

CONTRACT CHANGE ORDER NO. _____
SHEET ____ OF ____

100 % PS&E

ALL DIMENSIONS ARE IN MILLIMETERS UNLESS OTHERWISE SHOWN

SAN FRANCISCO OAKLAND BAY BRIDGE
EAST SPAN SEISMIC SAFETY PROJECT
SELF-ANCHORED SUSPENSION BRIDGE
(SUPERSTRUCTURE & TOWER)

W2 CAP BEAM REINFORCEMENT DETAILS NO. 47A

R. Valizadeh/V. Toan/Y.L./W.L./F.C.
DESIGN OVERSIGHT
SIGN OFF DATE 05/04/07

	BY	CHECKED
DESIGN	J. Duxbury	A. Sanjines
DETAILS	J. Duxbury	A. Sanjines
QUANTITIES	N. Vo	J. Duxbury

PREPARED FOR THE STATE OF CALIFORNIA DEPARTMENT OF TRANSPORTATION

R. Manzanarez
PROJECT ENGINEER

BRIDGE NO. 34-0006L/R
KILOMETER POST 13.2/13.9

CU 04
EA 0120F1

DISREGARD PRINTS BEARING EARLIER REVISION DATES 05/04/07

REVISION DATES (PRELIMINARY STAGE ONLY) SHEET OF 080S23A

Rev. Date: 5-18-98

ORIGINAL SCALE IN MILLIMETERS FOR REDUCED PLANS 0 10 20 30 40 50 60 70 80 90 100

FILE => I:\bb\04-012001\sas\contract plans and cco\cco\in progress\cco#34s1\aecap47as.dgn

USERNAME => ptom DATE PLOTTED => 09 MAY 2007 TIME PLOTTED => 15:51:25

NOTES:

1. For Section A-A thru C-C, see "W2 Cap Beam Reinforcement Details No.46" sheet.
2. Tie-down cables not shown for clarity.
3. Region ③ hoop spacing may be adjusted within 4x bar diameters.
4. Limits for Region ① to Region ⑤ are provided for general guidance in placing the "T" & "L" bars. Region ① thru Region ④ are within the column cage while Region ⑤ is located between the column cages.

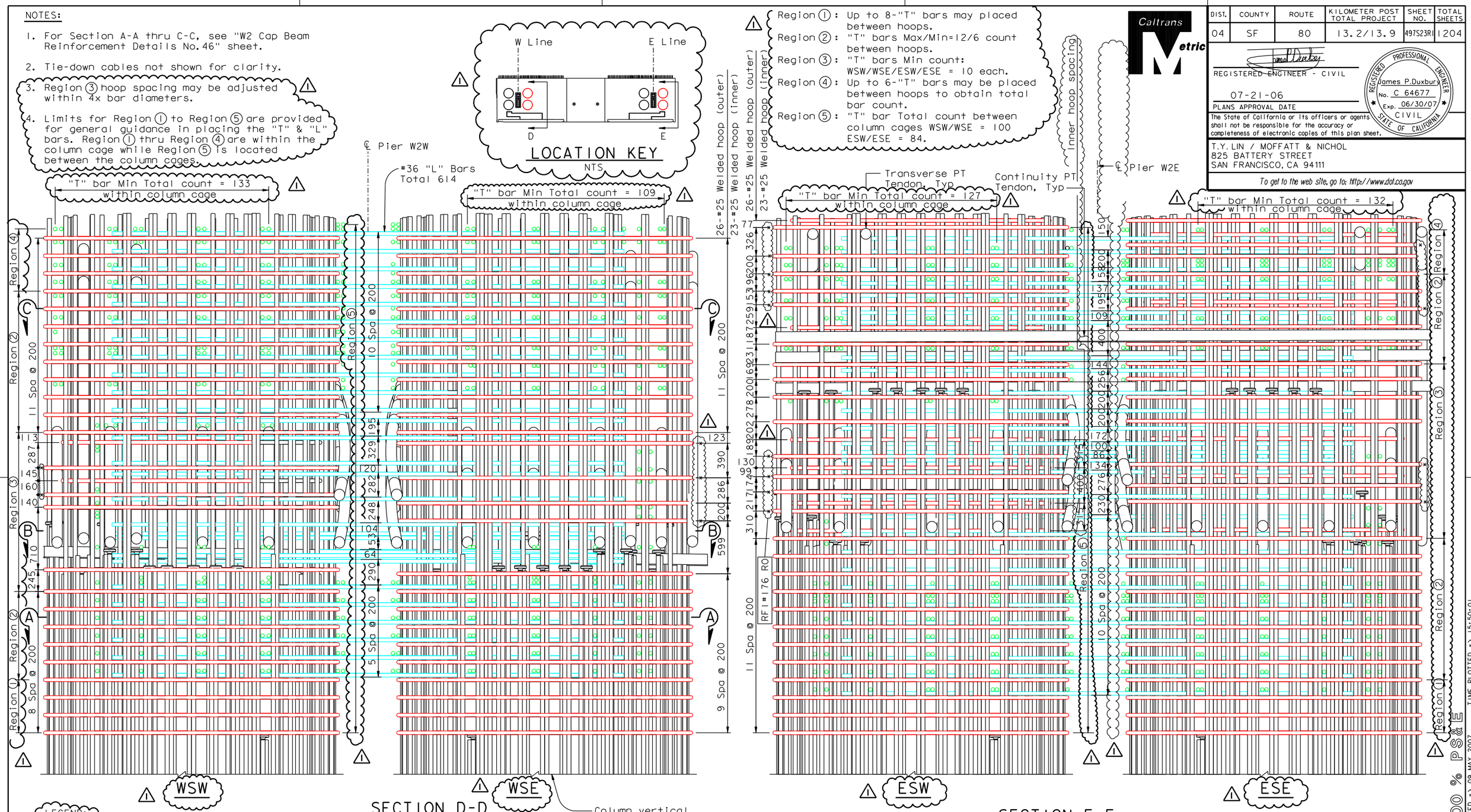

COLUMN REGION REINFORCEMENT
(Looking North)
1:20

ALL DIMENSIONS ARE IN MILLIMETERS UNLESS OTHERWISE SHOWN

DIST.	COUNTY	ROUTE	KILOMETER POST TOTAL PROJECT	SHEET NO.	TOTAL SHEETS
04	SF	80	13.2/13.9	497S23RI	1204

REGISTERED ENGINEER - CIVIL
07-21-06
PLANS APPROVAL DATE
REGISTERED PROFESSIONAL ENGINEER James P.Duxbury No. C 64677 Exp. 06/30/07 CIVIL STATE OF CALIFORNIA

The State of California or its officers or agents shall not be responsible for the accuracy or completeness of electronic copies of this plan sheet.

T.Y. LIN / MOFFATT & NICHOL
825 BATTERY STREET
SAN FRANCISCO, CA 94111

To get to the web site, go to: http://www.dot.ca.gov

MARK	DATE	DESCRIPTIONS	BY	CH'D	CCO#
1	05/04/07	W2 CAP BEAM ISD RESOLUTION	JD	AS	34S1
0	07/21/06	W2 CAP BEAM ISD	JD	AS	23

REVISIONS

CONTRACT CHANGE ORDER NO. ____
SHEET ____ OF ____

R. Valizadeh/V. Toan/Y.L./W.L./F.C.
DESIGN OVERSIGHT
SIGN OFF DATE 05/04/07

Rev. Date: 5-18-98

	BY	CHECKED
DESIGN	J. Duxbury	A. Sanjines
DETAILS	J. Duxbury	A. Sanjines
QUANTITIES	N. Vo	J. Duxbury

ORIGINAL SCALE IN MILLIMETERS FOR REDUCED PLANS 0 10 20 30 40 50 60 70 80 90 100

PREPARED FOR THE STATE OF CALIFORNIA DEPARTMENT OF TRANSPORTATION

R. Manzanarez
PROJECT ENGINEER

CU 04
EA 0120F1

BRIDGE NO. 34-0006L/R
KILOMETER POST 13.2/13.9

SAN FRANCISCO OAKLAND BAY BRIDGE
EAST SPAN SEISMIC SAFETY PROJECT
SELF-ANCHORED SUSPENSION BRIDGE
(SUPERSTRUCTURE & TOWER)

W2 CAP BEAM REINFORCEMENT DETAILS NO. 47

DISREGARD PRINTS BEARING EARLIER REVISION DATES 07/21/06

REVISION DATES (PRELIMINARY STAGE ONLY)

SHEET 080S23RI OF

FILE => I:\bb\04-0120I\sas\contract plans and cco\cco\in progress\cco#34s1\oecap46r-s.dgn

USERNAME => ptom DATE PLOTTED => 09 MAY 2007 TIME PLOTTED => 15:50:01

100 % PS&E

DIST.	COUNTY	ROUTE	KILOMETER POST TOTAL PROJECT	SHEET NO.	TOTAL SHEETS
04	SF	80	13.2/13.9	497S24R1	1204

Caltrans Metric

REGISTERED ENGINEER - CIVIL

07-21-06

PLANS APPROVAL DATE

REGISTERED PROFESSIONAL ENGINEER James P. Duxbury No. C 64677 Exp. 06/30/07 CIVIL STATE OF CALIFORNIA

The State of California or its officers or agents shall not be responsible for the accuracy or completeness of electronic copies of this plan sheet.

T.Y. LIN / MOFFATT & NICHOL
825 BATTERY STREET
SAN FRANCISCO, CA 94111

To get to the web site, go to: http://www.dot.ca.gov

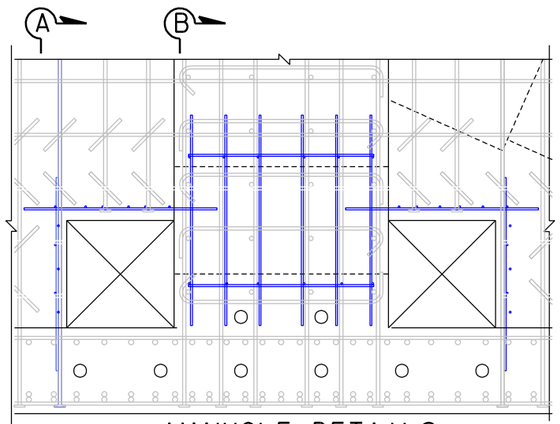

MANHOLE DETAILS

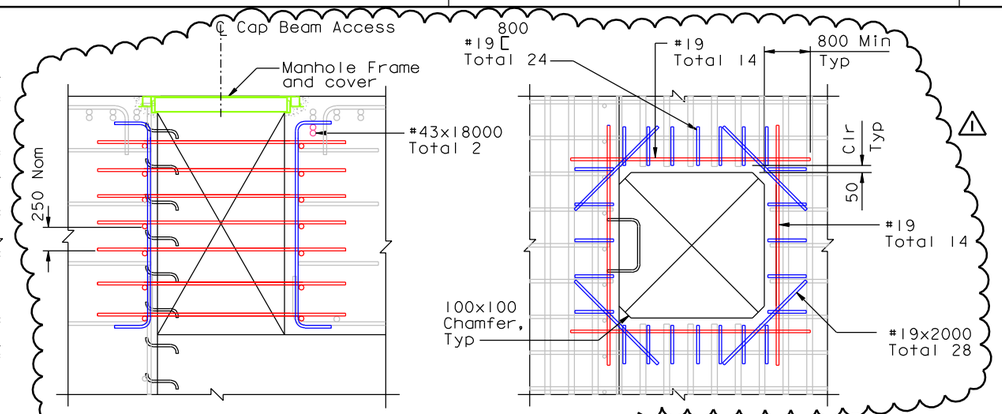

ALTERNATE MANHOLE DETAILS

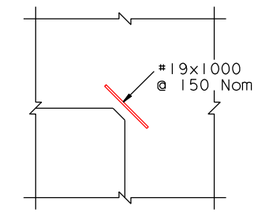

CORNER BAR DETAIL
(Upper cap beam void region)

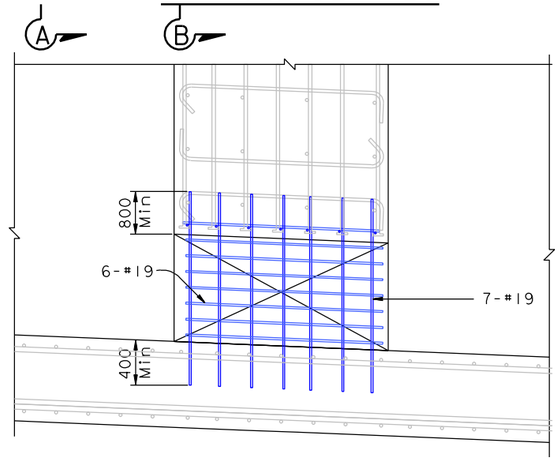

VIEW A-A

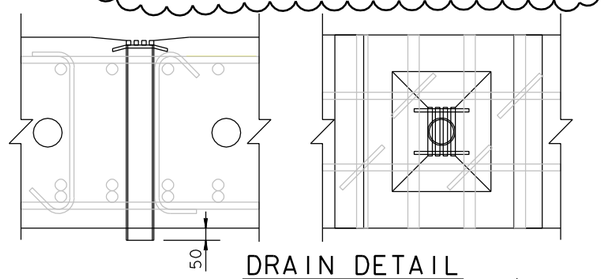

DRAIN DETAIL

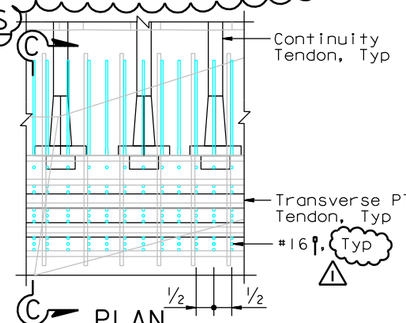

C PLAN
(Continuity Tendons 1A-13A & 30A-33A)

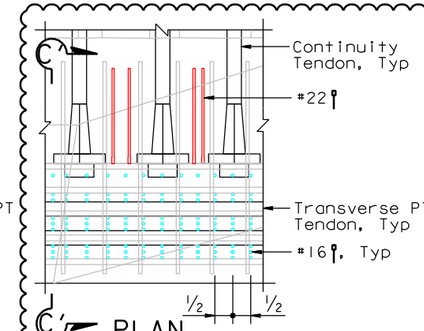

C' PLAN
(Continuity Tendons 14A-29A)

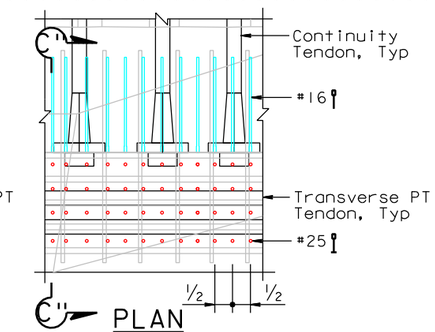

C'' PLAN
(Continuity Tendons 34A-42A)

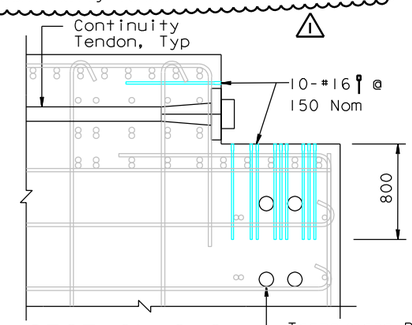

SECTION C-C

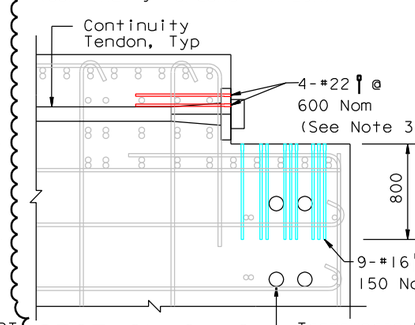

SECTION C'-C'

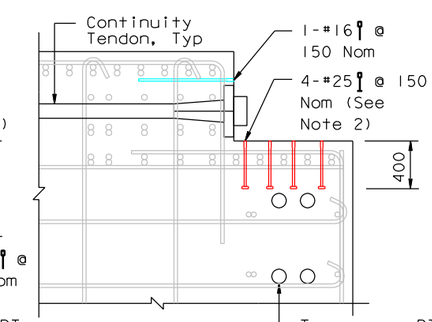

SECTION C''-C''

JOINT REINFORCEMENT DETAILS

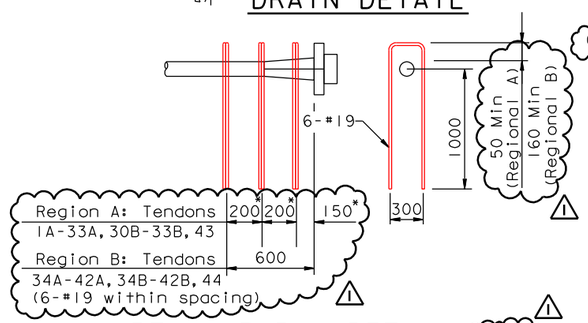

PT HAIR PIN DETAIL (*±50)
(NTS)

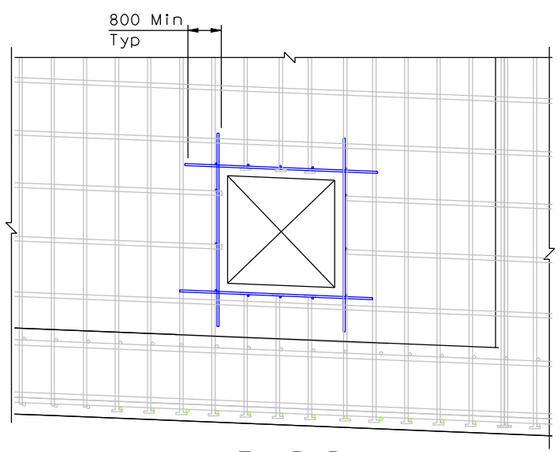

VIEW B-B

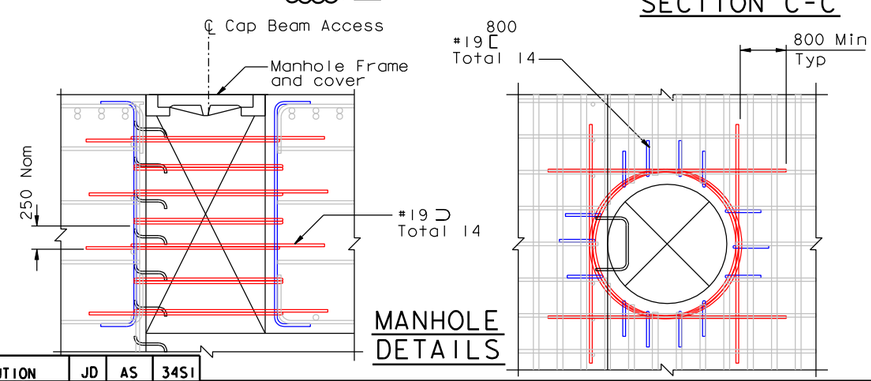

MANHOLE DETAILS

NOTES:

1. Manhole frame and cover shall be cast iron. Complete assembly shall be galvanized after fabrication. Cover shall be supplied with bolt down or locking devices.
2. At locations where 4-#25 vertical bars cannot be placed in the same row, it is acceptable to relocate #25 bars to adjacent rows; provided the same number of bars within the region is maintained.
3. At locations where the spacing between Continuity Tendons is 500 mm, it is acceptable to place 2-#22 (1 above and 1 below Layer 2 of the Top Mat reinforcement).

ALL DIMENSIONS ARE IN MILLIMETERS UNLESS OTHERWISE SHOWN

MARK	DATE	DESCRIPTIONS	BY	CH'D	CCO#
1	05/04/07	W2 CAP BEAM ISD RESOLUTION	JD	AS	34S1
0	07/21/06	W2 CAP BEAM ISD	JD	AS	23

REVISIONS

CONTRACT CHANGE ORDER NO. ____
SHEET ____ OF ____

R. Valizadeh/V. Toan/Y.L./W.L./F.C.
DESIGN OVERSIGHT
SIGN OFF DATE 05/04/07

Rev. Date: 5-18-98

	BY	CHECKED
DESIGN	J. Duxbury	A. Sanjines
DETAILS	J. Duxbury	A. Sanjines
QUANTITIES	N. Vo	J. Duxbury

ORIGINAL SCALE IN MILLIMETERS FOR REDUCED PLANS 0 10 20 30 40 50 60 70 80 90 100

PREPARED FOR THE STATE OF CALIFORNIA DEPARTMENT OF TRANSPORTATION

R. Manzanarez
PROJECT ENGINEER

CU 04
EA 0120F1

BRIDGE NO. 34-0006L/R
KILOMETER POST 13.2/13.9

DISREGARD PRINTS BEARING EARLIER REVISION DATES 07/21/06

SAN FRANCISCO OAKLAND BAY BRIDGE
EAST SPAN SEISMIC SAFETY PROJECT
SELF-ANCHORED SUSPENSION BRIDGE
(SUPERSTRUCTURE & TOWER)

W2 CAP BEAM REINFORCEMENT DETAILS NO. 48

REVISION DATES (PRELIMINARY STAGE ONLY) | SHEET 080S24R1 | OF

FILE => I:\bb\04-0120I\sas\contract plans and cco\cco\in progress\cco#34s1\aecap47r-s.dgn

USERNAME => ptom DATE PLOTTED => 09 MAY 2007 TIME PLOTTED => 15:52:52

100% PS&E

Caltrans now has a web site! To get to the web site, go to: http://www.dot.ca.gov

DIST.	COUNTY	ROUTE	KILOMETER POST TOTAL PROJECT	SHEET No.	TOTAL SHEETS
04	SF	80	13.2/13.9	497S25R3	1204

REGISTERED ENGINEER - CIVIL

12-6-04
PLANS APPROVAL DATE

REGISTERED PROFESSIONAL ENGINEER John Sun No. C 54648 Exp. 12/31/05 CIVIL STATE OF CALIFORNIA

The State of California or its officers or agents shall not be responsible for the accuracy or completeness of electronic copies of this plan sheet.

Caltrans Metric

REGISTERED PROFESSIONAL ENGINEER James P. Duxbury No. C 64677 Exp. 06/30/07 CIVIL STATE OF CALIFORNIA

FOR REVISIONS ONLY

T.Y. LIN / MOFFATT & NICHOL
825 BATTERY STREET
SAN FRANCISCO, CA 94111

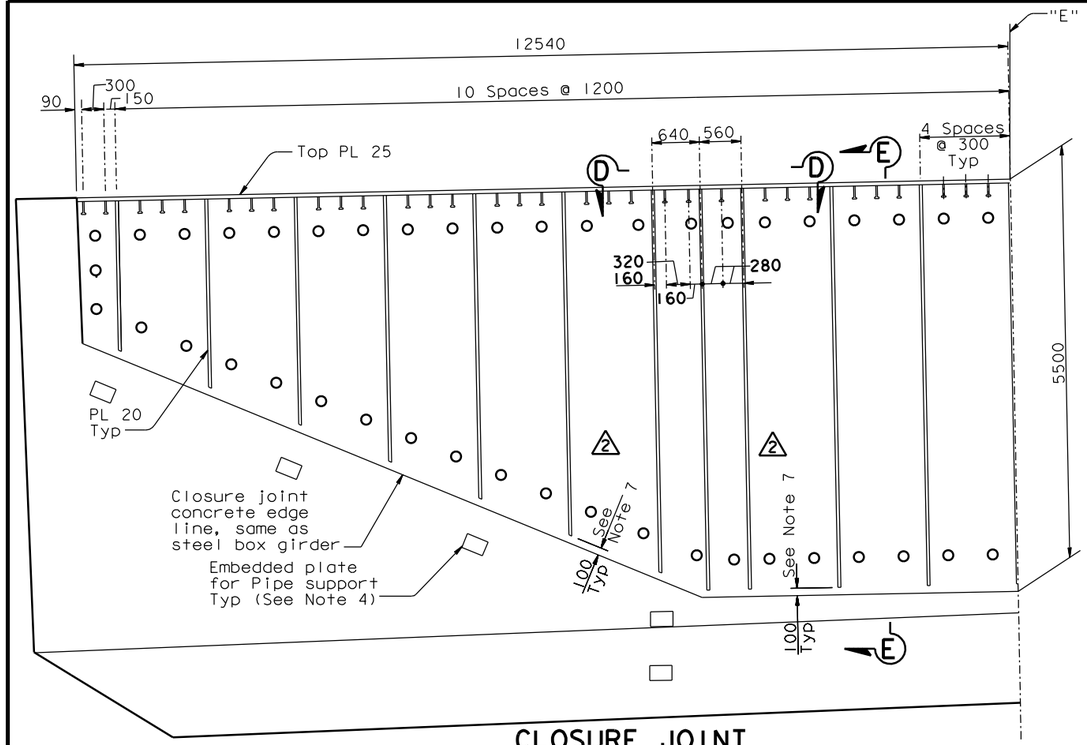

CLOSURE JOINT

(Closure joint reinforcement not shown for clarity)

1:40

NOTES:

6. For extents of post-tensioning into the Girder at Pier W2, see Top and Bottom Tendon layout on "W2 Cap Beam Post-tensioning Details No.5 thru No.8" sheets.
7. For Westbound continuity tendons 28B, 29A and 29B and for Eastbound continuity tendons 29A and 29B, the Contractor may terminate the PL20 vertical stiffener 125 mm above the bottom tendons and below the top tendons.
8. At the Contractor's option, hairpin dimension may be reduced to 1200 min.
9. At the Contractor's option, ultimate splice couplers may be used on #19 hairpins.
10. Bundled hairpins shall be placed along the entire box girder interface perimeter.
11. Hairpins may be shifted vertically by up 2 x bar diameter.

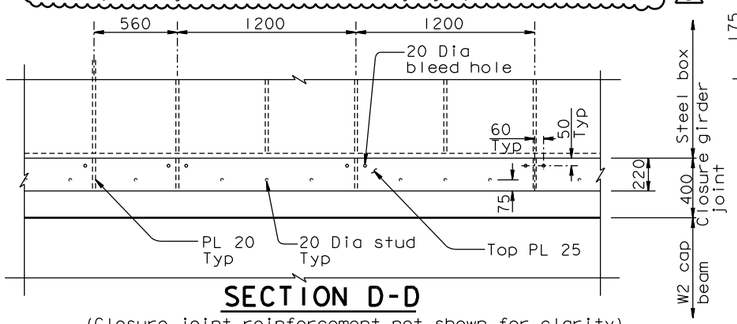

SECTION D-D

(Closure joint reinforcement not shown for clarity)

1:20

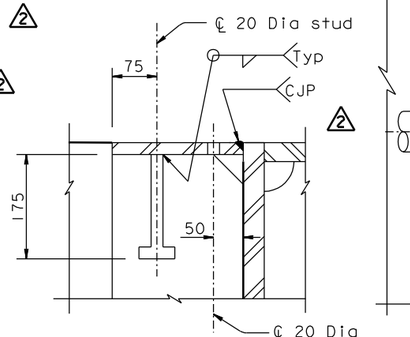

DETAIL A

1:5

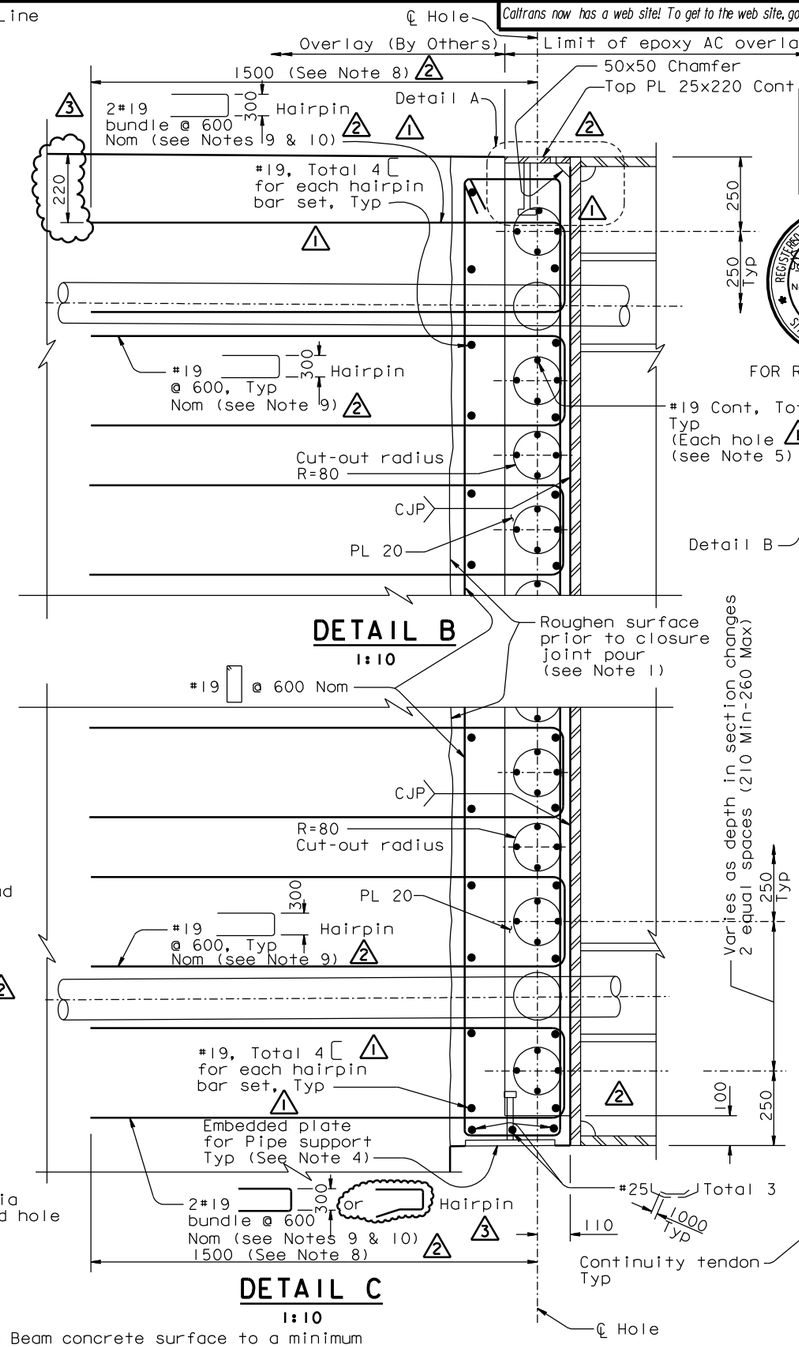

DETAIL B

1:10

DETAIL C

1:10

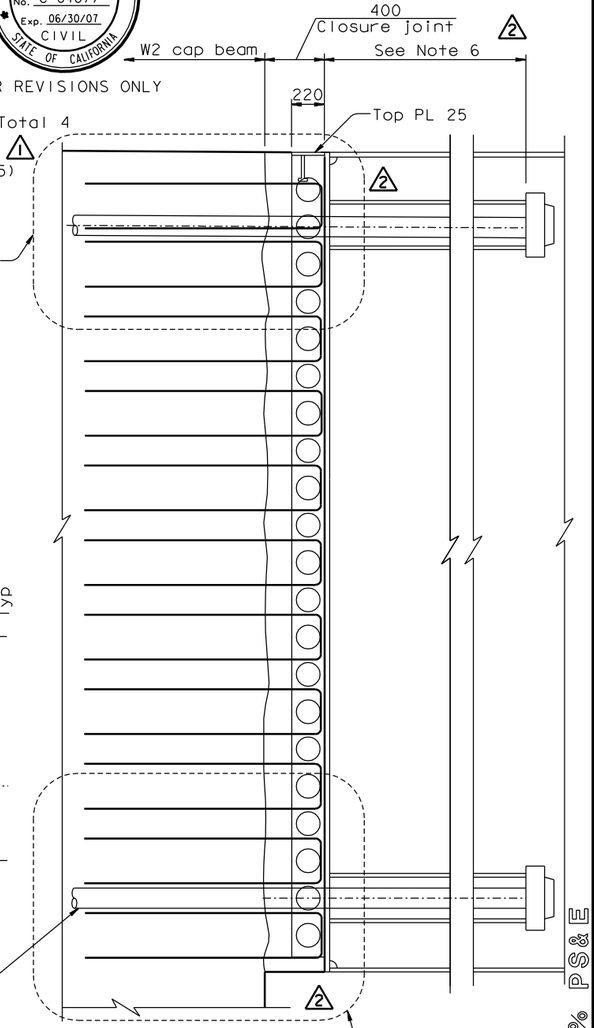

SECTION E-E

1:20

NOTES:

1. Roughen the existing W2 Cap Beam concrete surface to a minimum of 5 mm amplitude prior to pouring the closure joint.
2. Reinforcement spacing shall be adjusted to avoid PT ducts if required.
3. All plate shall be ASTM A709M HPS 485W, unless specified otherwise.
4. For pipe support locations and details, see "Road Plans".
5. At the Contractor's option, 2-#29 bundled bars may be used.

ALL DIMENSIONS ARE IN MILLIMETERS UNLESS OTHERWISE SHOWN

MARK	DATE	DESCRIPTIONS	BY	CH'D	CCO#
3	05/04/07	W2 CAP BEAM ISD RESOLUTION	JD	AS	34S1
2	02/16/07	BULKHEAD AT GIRDER PIER W2	JD	AS	27
1	01/31/07	WEST DEVIATION SADDLE GEOMETRY	JD	AS	15
0	07/21/06	GENERAL REVISIONS	JD	AS	23

REVISIONS

R. Valizadeh/V. Toan/Y.L./W.L./F.C.
DESIGN OVERSIGHT
SIGN OFF DATE 05/04/07

Rev. Date: 5-18-98

CONTRACT CHANGE ORDER NO. ____
SHEET ____ OF ____

DESIGN	BY J. Sun	CHECKED M. Chen	
DETAILS	BY J. Duxbury	CHECKED M. Chen	
QUANTITIES	BY S. Shi	CHECKED D. Harrison	

PREPARED FOR THE STATE OF CALIFORNIA DEPARTMENT OF TRANSPORTATION

R. Manzanarez
PROJECT ENGINEER

BRIDGE NO. 34-0006L/R
KILOMETER POST 13.2/13.9

SAN FRANCISCO OAKLAND BAY BRIDGE
EAST SPAN SEISMIC SAFETY PROJECT
SELF-ANCHORED SUSPENSION BRIDGE
(SUPERSTRUCTURE & TOWER)

W2 CAP BEAM REINFORCEMENT DETAILS NO. 49

ORIGINAL SCALE IN MILLIMETERS FOR REDUCED PLANS 0 10 20 30 40 50 60 70 80 90 100

CU 04
EA 0120F1

DISREGARD PRINTS BEARING EARLIER REVISION DATES 07/21/06

REVISION DATES (PRELIMINARY STAGE ONLY)

SHEET 080S25R3 OF

FILE => I:\bb\04-012001\sas\contract plans and cco\cco\in progress\cco#34s1\aecap48r-s.dgn

USERNAME => ptom DATE PLOTTED => 22 MAY 2007 TIME PLOTTED => 11:51:32

100% PS&E

DIST.	COUNTY	ROUTE	KILOMETER POST TOTAL PROJECT	SHEET NO.	TOTAL SHEETS
04	SF	80	13.2/13.9	500R2	1204

REGISTERED ENGINEER - CIVIL

12-6-04
PLANS APPROVAL DATE

REGISTERED PROFESSIONAL ENGINEER John Sun No. C 54648 Exp. 12/31/05 CIVIL STATE OF CALIFORNIA

The State of California or its officers or agents shall not be responsible for the accuracy or completeness of electronic copies of this plan sheet.

T.Y. LIN / MOFFATT & NICHOL
825 BATTERY STREET
SAN FRANCISCO, CA 94111

Caltrans now has a web site! To get to the web site, go to: http://www.dot.ca.gov

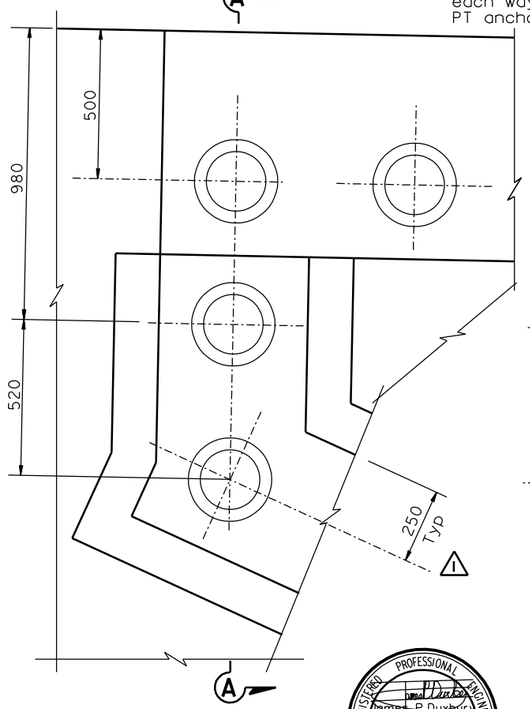

DETAIL A
1:10

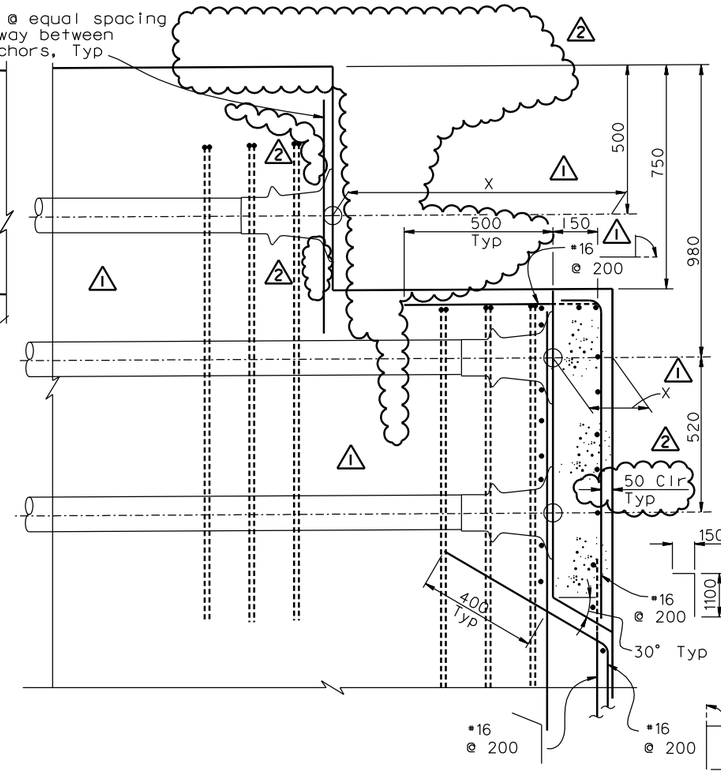

SECTION A-A
1:10

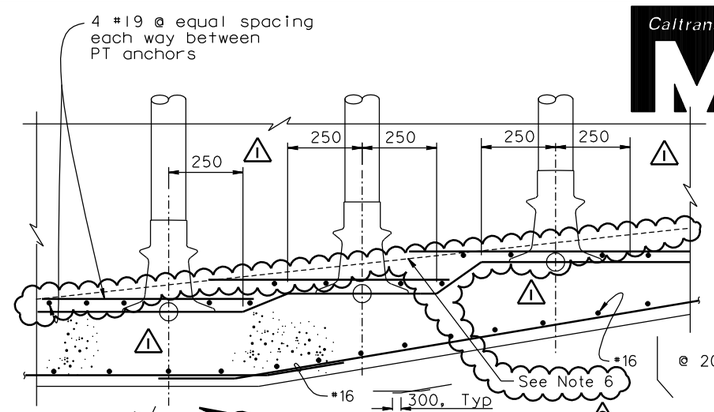

SECTION D-D
1:10

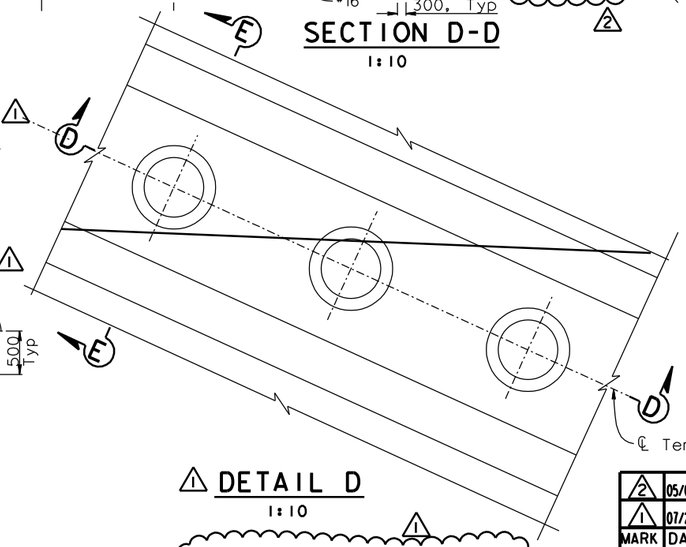

DETAIL D
1:10

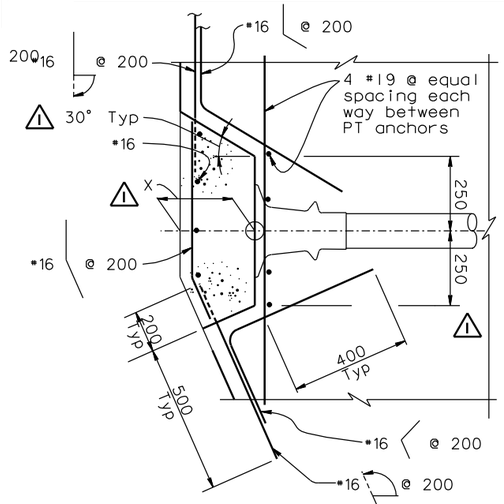

SECTION E-E
1:10

FOR REVISIONS ONLY

MARK	DATE	DESCRIPTIONS	BY	CH'D	CCO#
2	05/04/07	W2 CAP BEAM ISD RESOLUTION	JD	AS	34S1
1	07/21/06	W2 CAP BEAM ISD	JD	NV	23

REVISIONS

CONTRACT CHANGE ORDER NO. ____
SHEET ____ OF ____

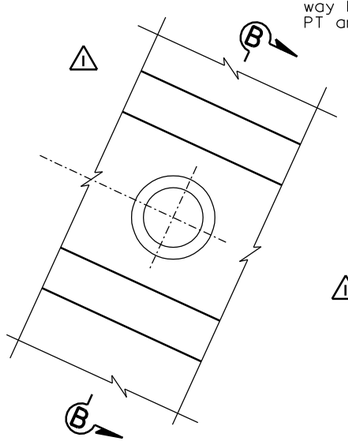

DETAIL B
1:10

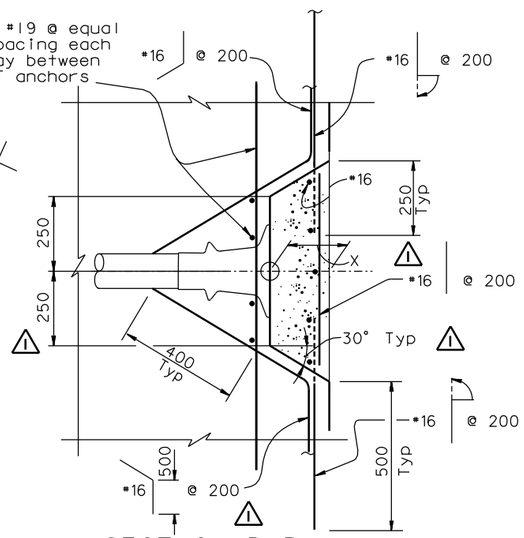

SECTION B-B
1:10

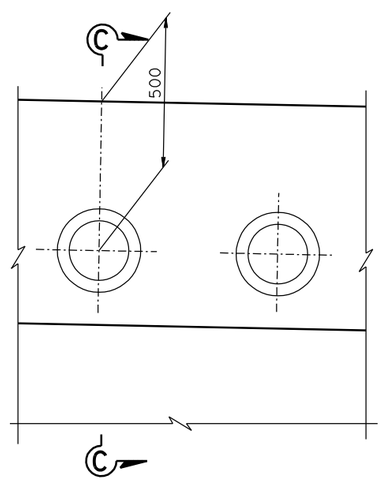

DETAIL C
1:10

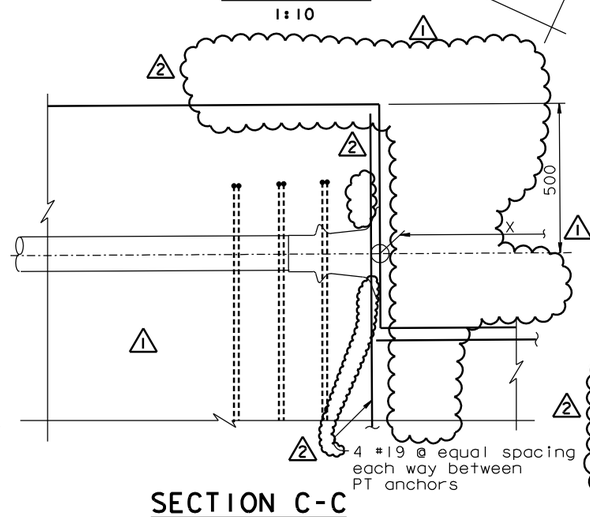

SECTION C-C
1:10

NOTES:

1. For additional details, see "W2 Cap Beam Blockout Details No.1" sheet.
2. Cap beam reinforcement not shown for clarity.
3. Local confining spiral reinforcement per tendon anchors shall be provided by PT tendon hardware supplier.
4. Blockouts on the cap beam south face shown, blockouts on the cap beam north face similar.
5. The 50 Clr is typical for the PT blockout bars detailed on the "W2 Cap Beam Blockout Details" sheets.
6. At the Contractor's option, the 4#19 individual transverse bars per PT anchorage may be supplied as 4#19 continuous transverse bars. The orthogonal #19 bars shall be positioned against the 4#19 continuous transverse bars.

ALL DIMENSIONS ARE IN MILLIMETERS UNLESS OTHERWISE SHOWN

100% PS&E

DATE PLOTTED => 22 MAY 2007 TIME PLOTTED => 11:49:51

USERNAME => ptom

R. Valizadeh/V. Toan/Y.L./W.L./F.C.
DESIGN OVERSIGHT
Ryan Valizadeh / Vong Toan / Y. Liu
SIGN OFF DATE 05/04/07

Rev. Date: 5-18-98

	BY	CHECKED
DESIGN	J. Sun	M. Chen
DETAILS	J. Duxbury	M. Chen
QUANTITIES	S. Shi	D. Harrison

ORIGINAL SCALE IN MILLIMETERS FOR REDUCED PLANS 0 10 20 30 40 50 60 70 80 90 100

PREPARED FOR THE STATE OF CALIFORNIA DEPARTMENT OF TRANSPORTATION

R. Manzanarez
PROJECT ENGINEER

CU 04
EA 0120F1

BRIDGE NO. 34-0006L/R
KILOMETER POST 13.2/13.9

DISREGARD PRINTS BEARING EARLIER REVISION DATES

SAN FRANCISCO OAKLAND BAY BRIDGE
EAST SPAN SEISMIC SAFETY PROJECT
SELF-ANCHORED SUSPENSION BRIDGE
(SUPERSTRUCTURE & TOWER)

W2 CAP BEAM BLOCKOUT DETAILS NO. 3

REVISION DATES (PRELIMINARY STAGE ONLY) 08/08/99 05/31/01 04/08/02 01/04/02 12/19/02

SHEET 83R2 OF

FILE => I:\bb\04-0120I\sas\contract plans and cco\cco\in progress\cco#34s1\decbb03.dgn

DIST.	COUNTY	ROUTE	KILOMETER POST TOTAL PROJECT	SHEET NO.	TOTAL SHEETS
04	SF	80	13.2/13.9	772R1	1204

Caltrans Metric

REGISTERED ENGINEER - CIVIL

12-6-04
PLANS APPROVAL DATE

REGISTERED PROFESSIONAL ENGINEER John Sun No. C 54648 Exp. 12/31/05 CIVIL STATE OF CALIFORNIA

The State of California or its officers or agents shall not be responsible for the accuracy or completeness of electronic copies of this plan sheet.

T.Y. LIN / MOFFATT & NICHOL
825 BATTERY STREET
SAN FRANCISCO, CA 94111

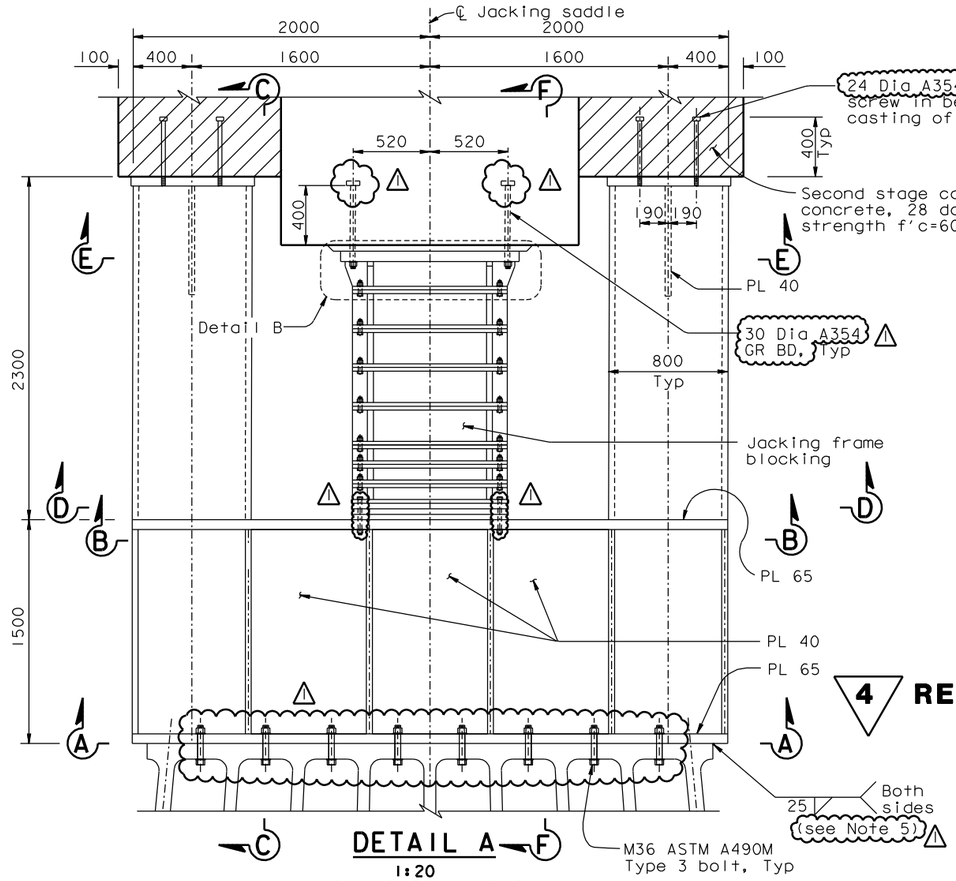

DETAIL A
1:20
(JACKING FRAMING PLAN)

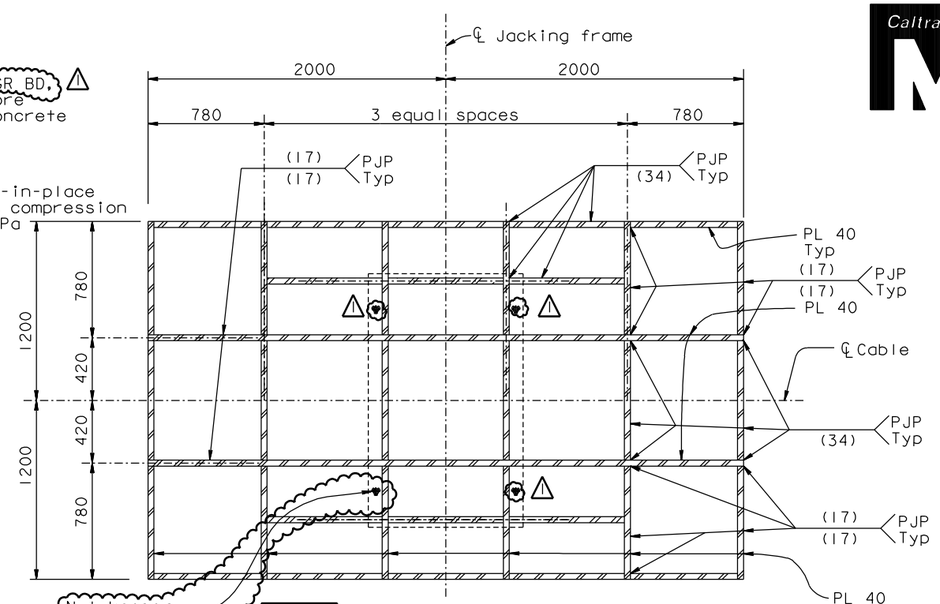

4 SECTION B-B
1:20

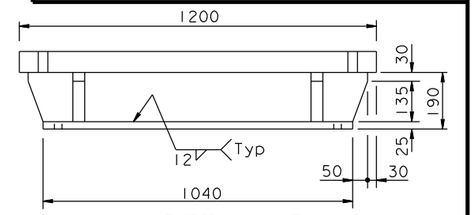

DETAIL B
1:10

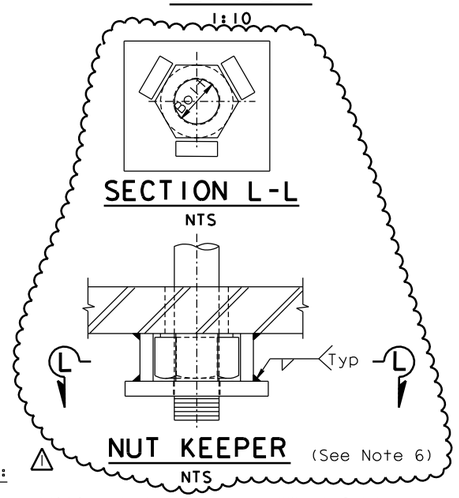

4 REVISED PER ADDENDUM NO. 4 DATED DECEMBER 9, 2005

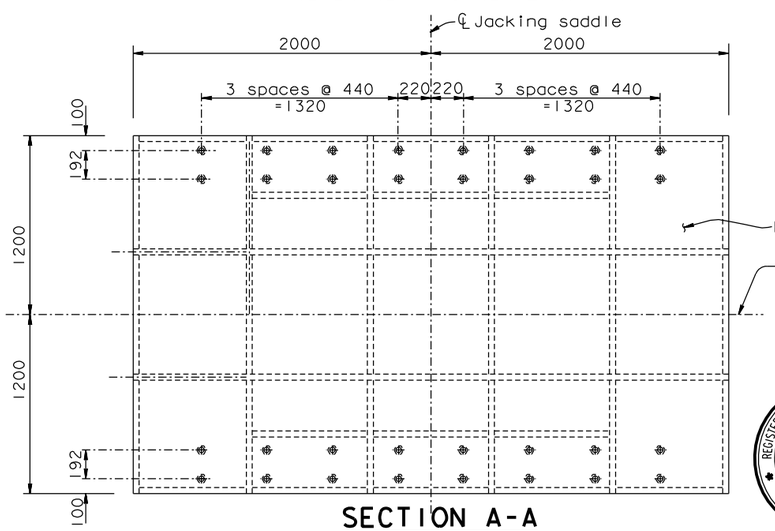

SECTION A-A
1:20

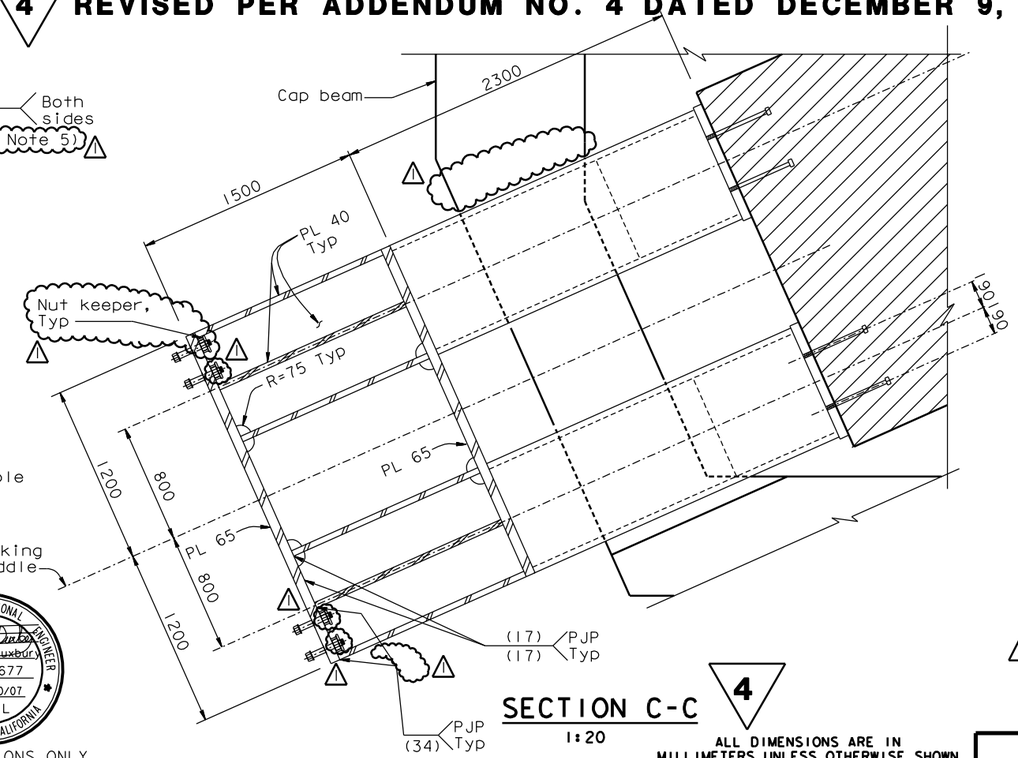

SECTION C-C
1:20

4 ALL DIMENSIONS ARE IN MILLIMETERS UNLESS OTHERWISE SHOWN

NOTES:

1. For additional details, see "West Cable Anchorage Layout No.3" sheet.
2. For Section D-D through F-F, see "West Jacking Frame Details No.2" sheet.
3. Jacking frame blocking support shown is optional. Contractor may use other shimming alternatives for jacking frame support purpose. Contractor shall submit the recommended jacking frame support alternative to the Engineer for review and approval prior to start of construction.
4. All plate shall be ASTM A709M HPS 485W, unless specified otherwise.
5. At the Contractor's option, fillet weld may be performed in the field.
6. The Contractor may propose alternate nut keeper details to suit his means and methods, subject to review and approval of the Engineer.

REGISTERED PROFESSIONAL ENGINEER James P. Duxbury No. C 64677 Exp. 06/30/07 CIVIL STATE OF CALIFORNIA

FOR REVISIONS ONLY

SAN FRANCISCO OAKLAND BAY BRIDGE
EAST SPAN SEISMIC SAFETY PROJECT
SELF-ANCHORED SUSPENSION BRIDGE
(SUPERSTRUCTURE & TOWER)

WEST JACKING FRAME DETAILS NO. 1

R. Valizadeh/V. Toan/Y.L./W.L./F.C.
DESIGN OVERSIGHT
SIGN OFF DATE 05/04/07

Rev. Date: 5-18-98

MARK	DATE	DESCRIPTIONS	BY	CH'D	CCO#
1	05/04/07	W2 CAP BEAM ISD RESOLUTION	JD	AS	34S1

REVISIONS

CONTRACT CHANGE ORDER NO. ____
SHEET ___ OF ___

	BY	CHECKED
DESIGN	J. Sun	T. McMeans
DETAILS	J. Duxbury	T. McMeans
QUANTITIES	J. Duxbury	S. Shi

PREPARED FOR THE STATE OF CALIFORNIA DEPARTMENT OF TRANSPORTATION

R. Manzanarez
PROJECT ENGINEER

BRIDGE NO. 34-0006L/R
KILOMETER POST 13.2/13.9

CU 04
EA 0120F1

ORIGINAL SCALE IN MILLIMETERS FOR REDUCED PLANS 0 10 20 30 40 50 60 70 80 90 100

DISREGARD PRINTS BEARING EARLIER REVISION DATES

REVISION DATES (PRELIMINARY STAGE ONLY) 08/07/99 05/31/01 04/08/02 07/01/02 12/19/02 11/13/05

SHEET 355R1 OF

FILE => I:\bb\04-012001\sas\contract plans and cco\cco\in progress\cco#34s1\agsdd04c.dgn

USERNAME => ptom DATE PLOTTED => 22 MAY 2007 TIME PLOTTED => 11:48:14

100 % PS&E

DIST.	COUNTY	ROUTE	KILOMETER POST TOTAL PROJECT	SHEET NO.	TOTAL SHEETS
04	SF	80	13.2/13.9	773R2	1204

Caltrans Metric

REGISTERED ENGINEER - CIVIL

12-6-04
PLANS APPROVAL DATE

REGISTERED PROFESSIONAL ENGINEER John Sun No. C 54648 Exp. 12/31/05 CIVIL STATE OF CALIFORNIA

The State of California or its officers or agents shall not be responsible for the accuracy or completeness of electronic copies of this plan sheet.

T.Y. LIN / MOFFATT & NICHOL
825 BATTERY STREET
SAN FRANCISCO, CA 94111

To get to the web site, go to: http://www.dot.ca.gov

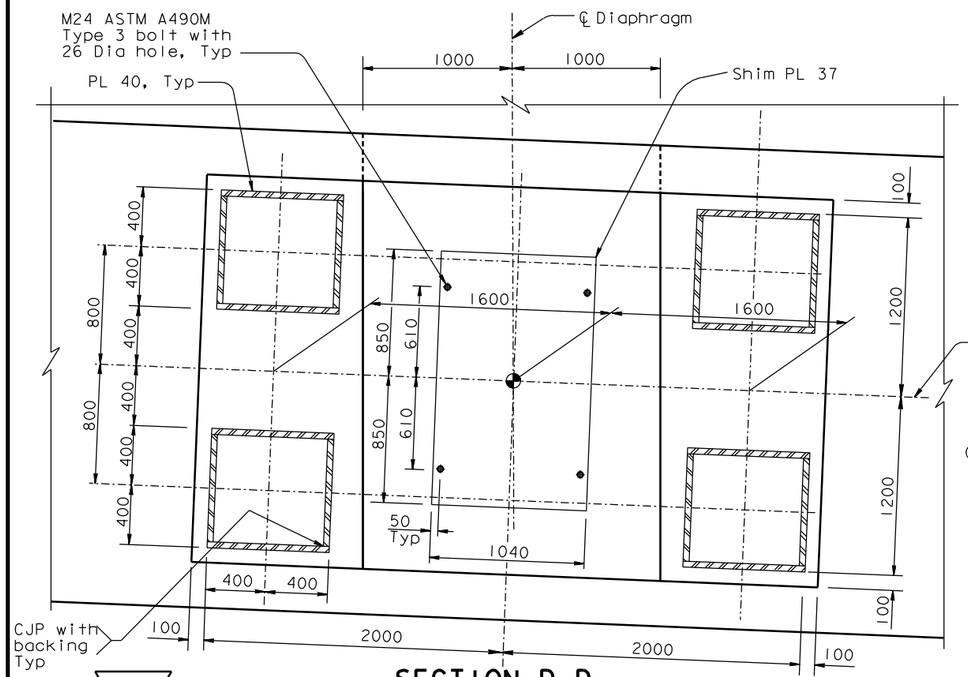

SECTION D-D
1:20

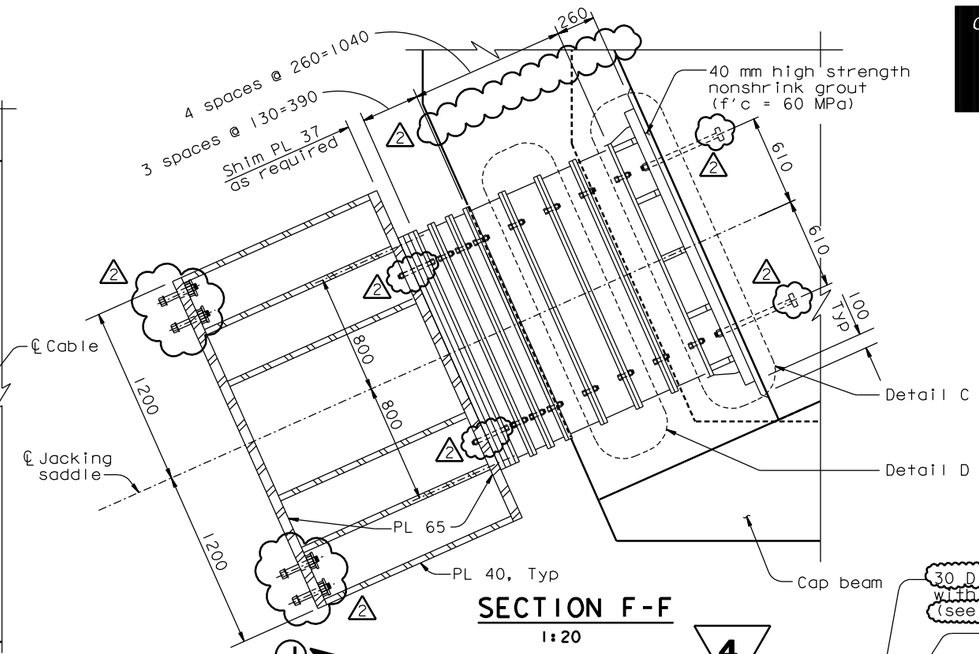

SECTION F-F
1:20

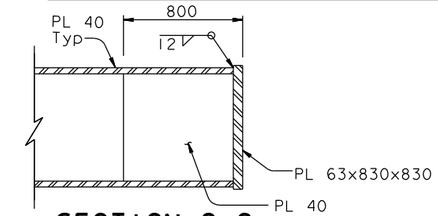

SECTION G-G
1:20

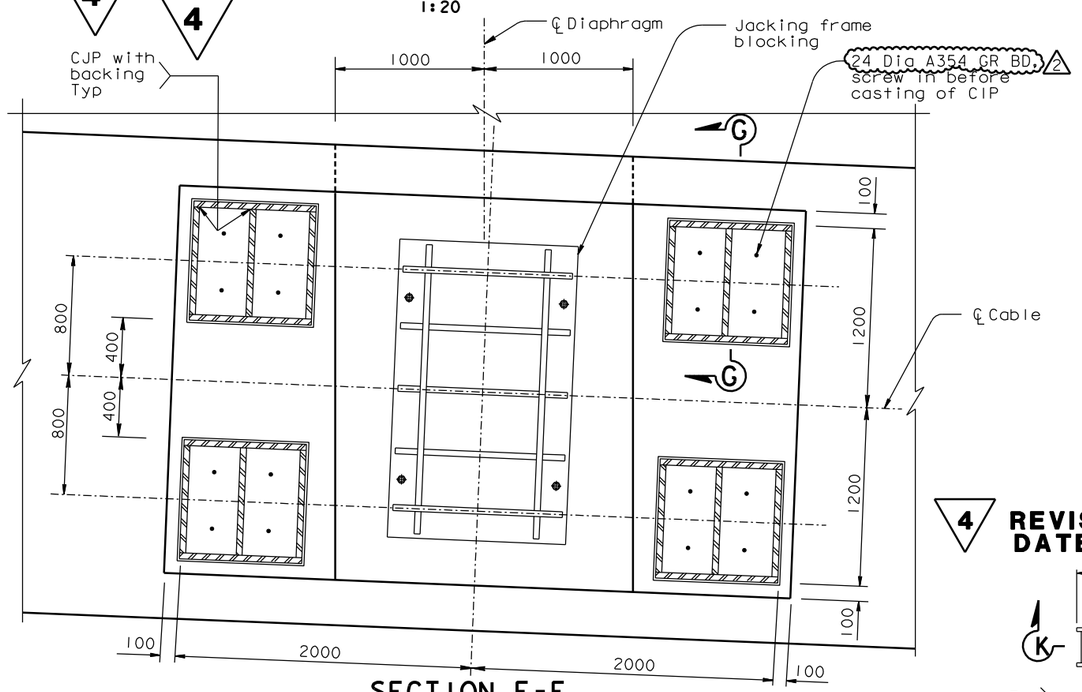

SECTION E-E
1:20

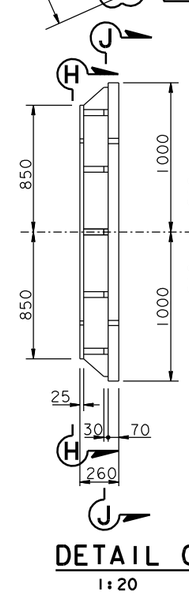

DETAIL C
1:20

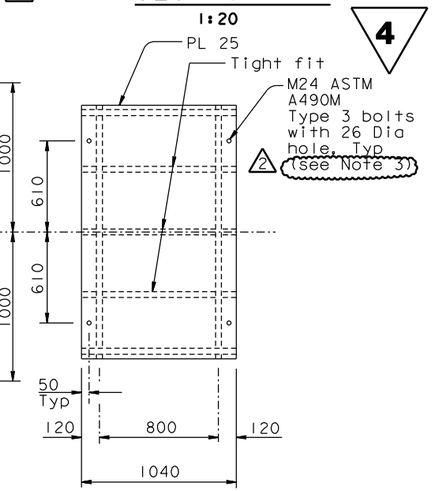

SECTION H-H
1:20

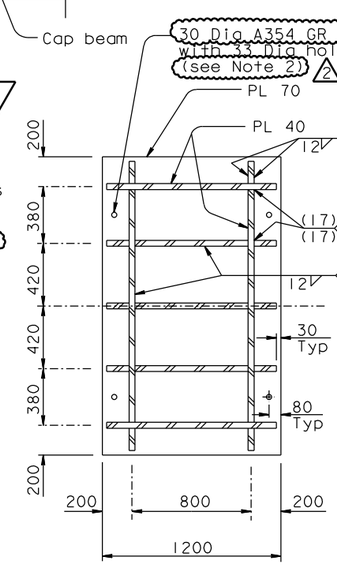

SECTION J-J
1:20

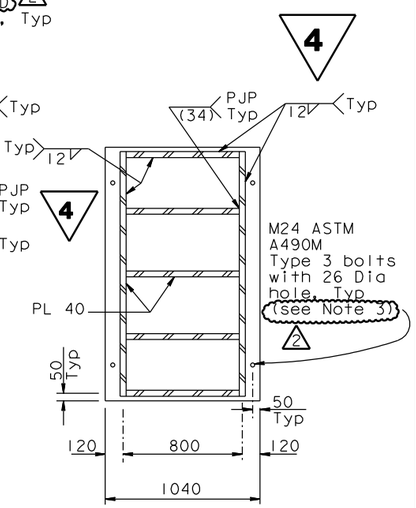

SECTION K-K
1:20

4 REVISED PER ADDENDUM NO. 4 DATED DECEMBER 9, 2005

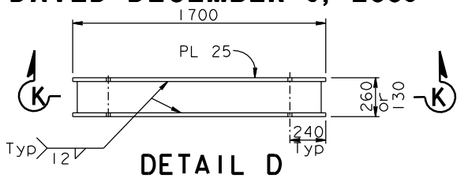

DETAIL D
1:20

REGISTERED PROFESSIONAL ENGINEER James P. Duxbury No. C 64677 Exp. 06/30/07 CIVIL STATE OF CALIFORNIA

FOR REVISIONS ONLY

NOTES:

1. For additional details, see "West Jacking Frame Details No.1" sheet.
2. At the Contractor's option, a 65 Max diameter oversized hole may be used provided a 25x120x120 plate washer is also used.
3. At the Contractor's option, a 30 Max diameter oversized hole may be used provided standard hardened flat washers are provided on each outer ply that has an oversized hole.

ALL DIMENSIONS ARE IN MILLIMETERS UNLESS OTHERWISE SHOWN

MARK	DATE	DESCRIPTIONS	BY	CH'D	CCO#
2	05/04/07	W2 CAP BEAM ISD RESOLUTION	JD	AS	34S1
1	07/21/06	W2 CAP BEAM ISD	JD	NV	23

REVISIONS

CONTRACT CHANGE ORDER NO. ____
SHEET ____ OF ____

R. Valizadeh/V. Toan/Y.L./W.L./F.C.
DESIGN OVERSIGHT
SIGN OFF DATE 05/04/07

Rev. Date: 5-18-98

DESIGN	BY J. Sun	CHECKED T. McMeans	
DETAILS	BY J. Duxbury	CHECKED T. McMeans	
QUANTITIES	BY J. Duxbury	CHECKED S. Shi	

PREPARED FOR THE STATE OF CALIFORNIA DEPARTMENT OF TRANSPORTATION

R. Manzanarez
PROJECT ENGINEER

BRIDGE NO. 34-0006L/R
KILOMETER POST 13.2/13.9

SAN FRANCISCO OAKLAND BAY BRIDGE
EAST SPAN SEISMIC SAFETY PROJECT
SELF-ANCHORED SUSPENSION BRIDGE
(SUPERSTRUCTURE & TOWER)

WEST JACKING FRAME DETAILS NO. 2

ORIGINAL SCALE IN MILLIMETERS FOR REDUCED PLANS 0 10 20 30 40 50 60 70 80 90 100

CU 04
EA 0120F1

DISREGARD PRINTS BEARING EARLIER REVISION DATES

REVISION DATES (PRELIMINARY STAGE ONLY): 08/08/99 05/31/01 04/08/02 01/01/02 12/18/02 11/13/05

SHEET 356R2 OF

FILE => I:\bb\04-012001\sas\contract plans and cco\cco\in progress\cco#34s1\agsdd04d.dgn

100 % PS&E

DATE PLOTTED => 22 MAY 2007 TIME PLOTTED => 11:45:58

USERNAME => ptom

Caltrans now has a web site! To get to the web site, go to: http://www.dot.ca.gov

DIST.	COUNTY	ROUTE	KILOMETER POST TOTAL PROJECT	SHEET NO.	TOTAL SHEETS
04	SF	80	13.2/13.9	829R1	1204

REGISTERED ENGINEER - CIVIL

12-6-04
PLANS APPROVAL DATE

REGISTERED PROFESSIONAL ENGINEER Tien Hung Ho No. C 43990 Exp. 6/30/07 CIVIL STATE OF CALIFORNIA

The State of California or its officers or agents shall not be responsible for the accuracy or completeness of electronic copies of this plan sheet.

T.Y. LIN / MOFFATT & NICHOL
825 BATTERY STREET
SAN FRANCISCO, CA 94111

4 Caltrans Metric

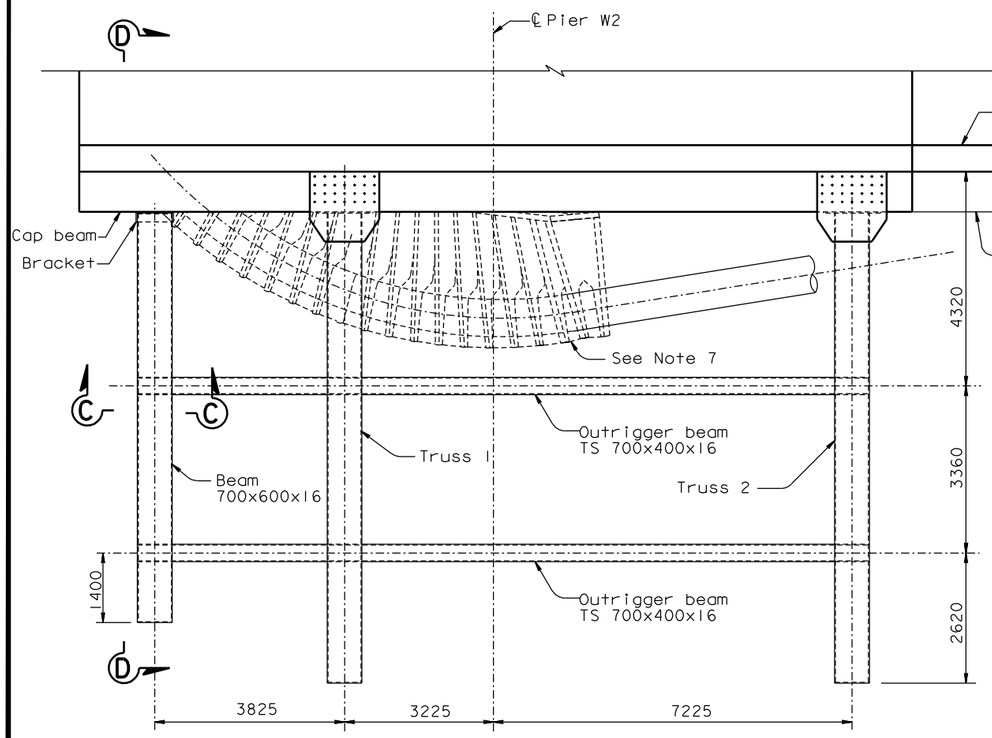

BIKEPATH PARTIAL PLAN AT CAP BEAM
1:60
NOTE: Stringer not shown, for clarity

4 REVISED PER ADDENDUM NO. 4 DATED DATED DECEMBER 9, 2005

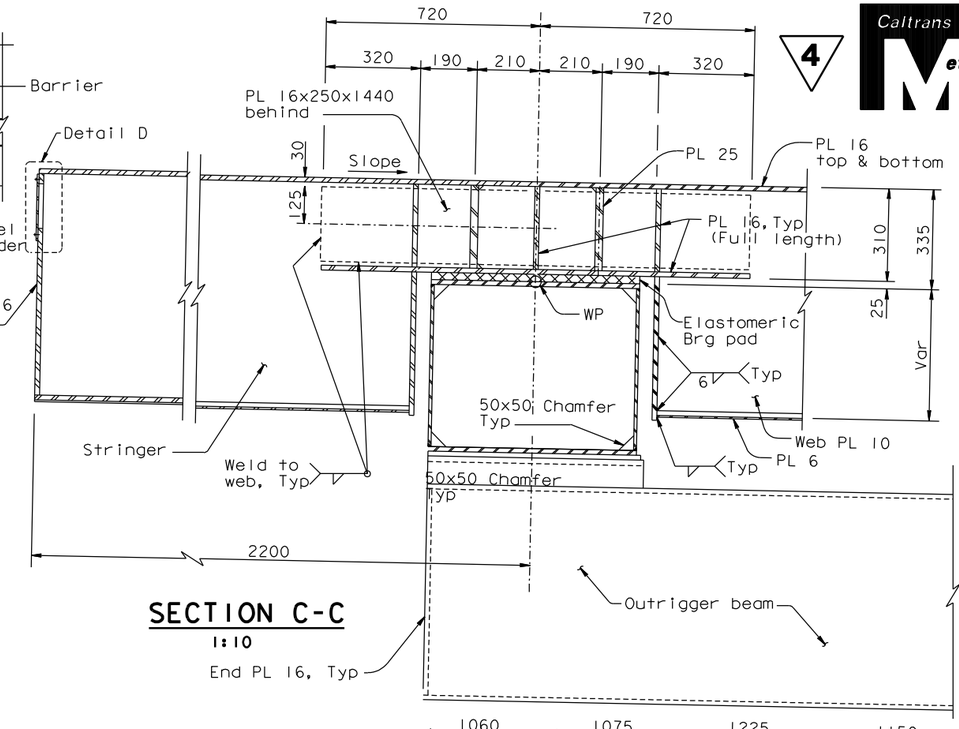

SECTION C-C
1:10

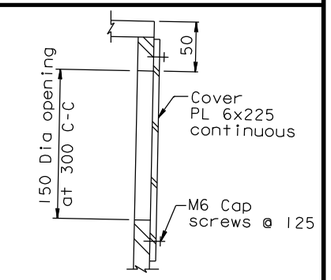

DETAIL D
1:3

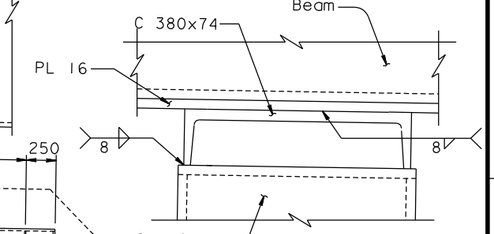

DETAIL C
1:5

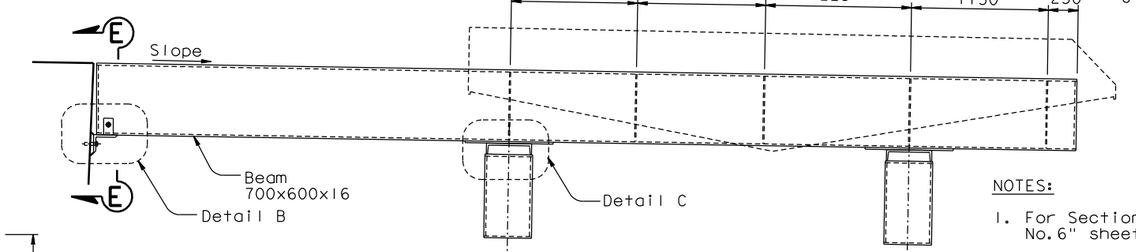

SECTION D-D
1:25

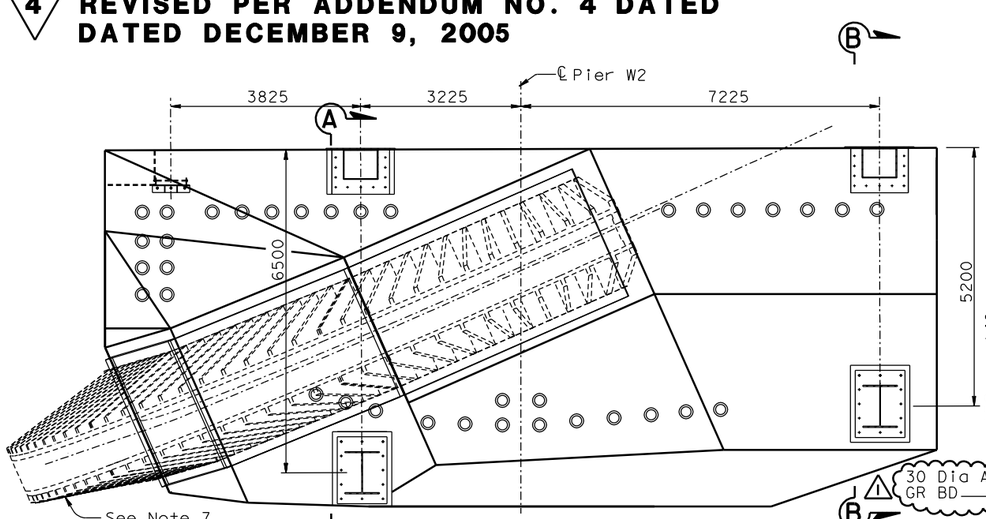

BIKEPATH SIDE VIEW
1:60

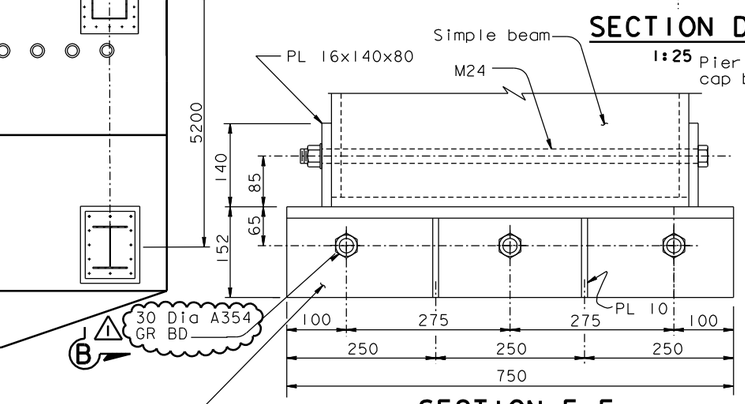

SECTION E-E
1:5

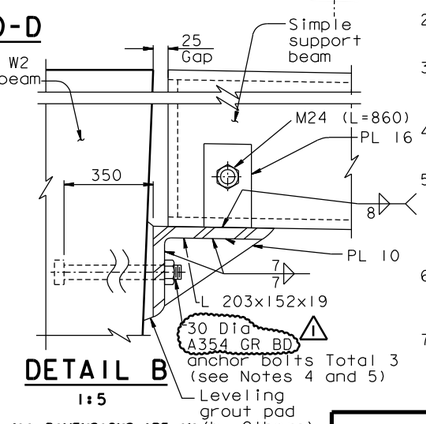

DETAIL B
1:5

ALL DIMENSIONS ARE IN MILLIMETERS UNLESS OTHERWISE SHOWN

NOTES:

1. For Section A-A, see "Bikepath Details No.6" sheet.
2. For Section B-B, see "Bikepath Details No.7" sheet.
3. Cantilever truss 1, truss 2 and outrigger beams to be installed by Others after demolition of existing structure.
4. The tolerance for placement of the anchor bolts is ±25 mm.
5. The Contractor shall survey the as-built anchor bolt locations and prepare a template. This template shall be trial fit in the field prior to drilling the holes in the angle.
6. The Contractor shall furnish all anchor bolt components and shall provide corrosion protection covering exposed ends.
7. Views of the deviation saddle are for illustration only. For deviation saddle details, see "West Deviation Saddle Details" sheets.

100% PS&E

DATE PLOTTED => 22 MAY 2007 TIME PLOTTED => 11:42:32

R. Valizadeh/V. Toan/Y.L./W.L./F.C.
DESIGN OVERSIGHT
Roya Valizadeh / Vong Toan / Y. Lin
SIGN OFF DATE 05/04/07

Rev. Date: 5-18-98

MARK	DATE	DESCRIPTIONS	BY	CH'D	CCO#
1	05/04/07	W2 CAP BEAM ISD RESOLUTION	AS	TH	34S1

REVISIONS

CONTRACT CHANGE ORDER NO. ____
SHEET ___ OF ___

DESIGN	BY T. Ho	CHECKED T. McMeans	
DETAILS	BY R. Xu	CHECKED P. Ritchie	
QUANTITIES	BY C. Bernardo	CHECKED S. Shi	

PREPARED FOR THE STATE OF CALIFORNIA DEPARTMENT OF TRANSPORTATION

ORIGINAL SCALE IN MILLIMETERS FOR REDUCED PLANS 0 10 20 30 40 50 60 70 80 90 100

R. Manzanarez
PROJECT ENGINEER

CU 04
EA 0120F1

BRIDGE NO. 34-0006L/R
KILOMETER POST 13.2/13.9

DISREGARD PRINTS BEARING EARLIER REVISION DATES

SAN FRANCISCO OAKLAND BAY BRIDGE
EAST SPAN SEISMIC SAFETY PROJECT
SELF-ANCHORED SUSPENSION BRIDGE
(SUPERSTRUCTURE & TOWER)

BIKEPATH DETAILS NO.5

REVISION DATES (PRELIMINARY STAGE ONLY): 05/31/01 04/08/02 07/01/02 12/19/02 09/08/04 11/13/05

SHEET 412R1 OF

FILE => I:\bb\04-012001\sas\contract plans and cco\cco\in progress\cco#34s1\agbwd05.dgn

USERNAME => ptom

DIST.	COUNTY	ROUTE	KILOMETER POST TOTAL PROJECT	SHEET NO.	TOTAL SHEETS
04	SF	80	13.2/13.9	830R1	1204

Caltrans Metric

REGISTERED ENGINEER - CIVIL

12-6-04
PLANS APPROVAL DATE

REGISTERED PROFESSIONAL ENGINEER Tien Hung Ho No. C 43990 Exp. 6/30/07 CIVIL STATE OF CALIFORNIA

The State of California or its officers or agents shall not be responsible for the accuracy or completeness of electronic copies of this plan sheet.

T.Y. LIN / MOFFATT & NICHOL
825 BATTERY STREET
SAN FRANCISCO, CA 94111

Caltrans now has a web site! To get to the web site, go to: http://www.dot.ca.gov

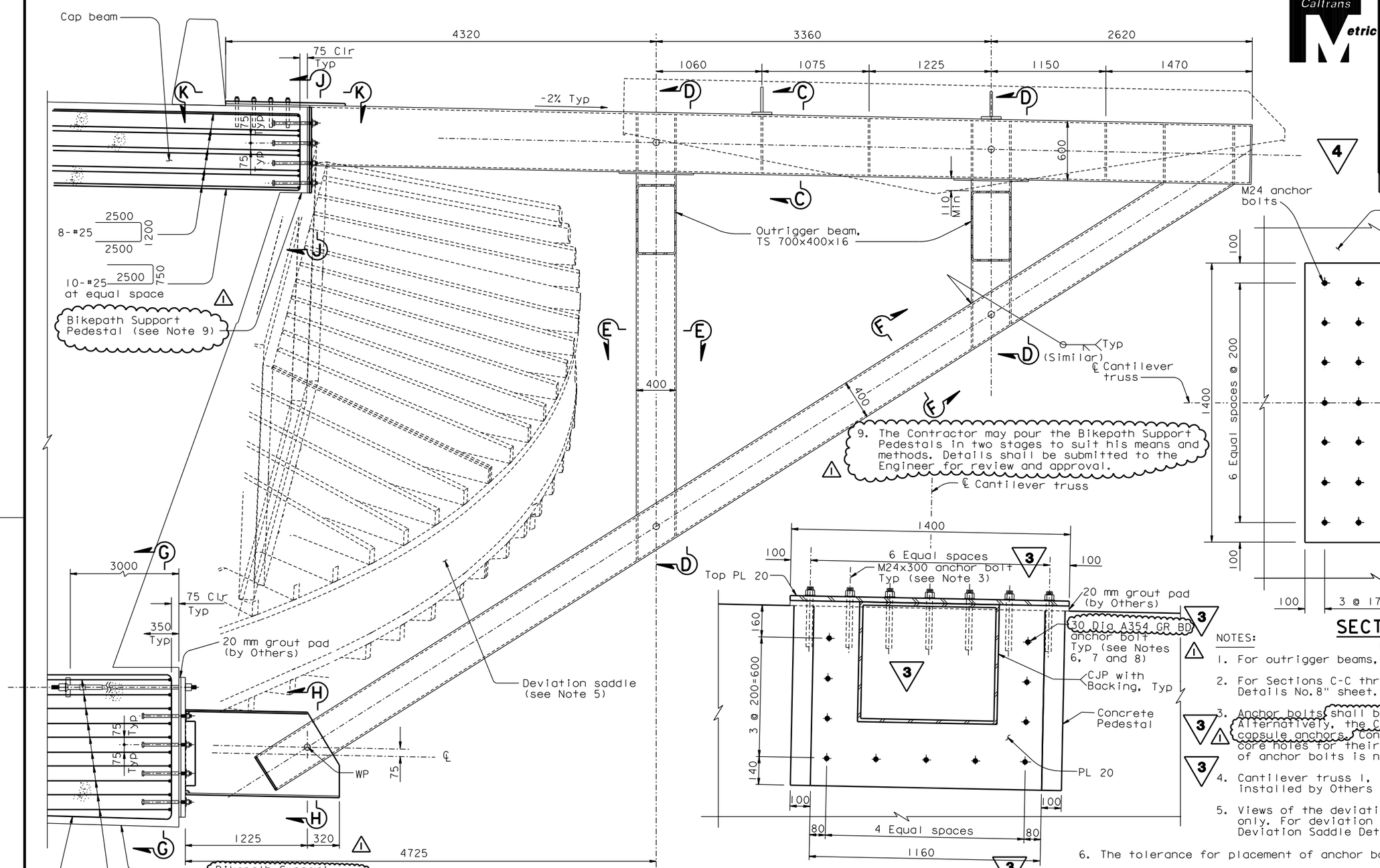

SECTION A-A
1:20

Cantilever Truss (Between PP 5 & PP 6)

SECTION J-J
1:10

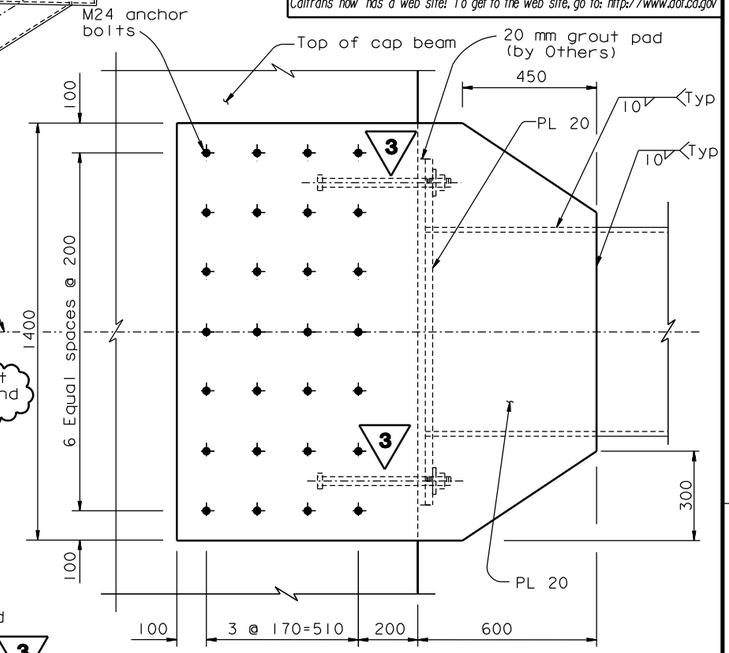

SECTION K-K
1:10

NOTES:

1. For outrigger beams, see "Bikepath Details No.8" sheet.
2. For Sections C-C through H-H, see "Bikepath Details No.8" sheet.
3. Anchor bolts shall be ASTM A345 Gr BC and grouted. Alternatively, the Contractor may provide M24x290 resin capsule anchors. Contractor shall furnish anchor bolts and core holes for their installation by Others. Installation of anchor bolts is not part of this contract.
4. Cantilever truss 1, truss 2 and outrigger beams to be installed by Others after demolition of existing structure.
5. Views of the deviation saddle are for illustration only. For deviation saddle details, see "West Deviation Saddle Details" sheets.
6. The tolerance for placement of anchor bolts is 25 mm.
7. The Contractor shall survey the as-built anchor bolt locations and prepare a template. This template shall be trial fit in the field prior to drilling the holes in the base plate.
8. The Contractor shall furnish all anchor bolt components and shall provide corrosion protection covering exposed ends.

REVISED PER ADDENDUM NO. 3 DATED NOVEMBER 7, 2005

REVISED PER ADDENDUM NO. 4 DATED DECEMBER 9, 2005

ALL DIMENSIONS ARE IN MILLIMETERS UNLESS OTHERWISE SHOWN

MARK	DATE	DESCRIPTIONS	BY	CH'D	CCO#
1	05/04/07	W2 CAP BEAM ISD RESOLUTION	JD	TH	34S1

REVISIONS

CONTRACT CHANGE ORDER NO. ____
SHEET ___ OF ___

R. Valizadeh/V. Toan/Y.L./W.L./F.C.
DESIGN OVERSIGHT
SIGN OFF DATE 05/04/07

Rev. Date: 5-18-98

	BY	CHECKED
DESIGN	T. Ho	T. McMeans
DETAILS	R. Xu	P. Ritchie
QUANTITIES	C. Bernardo	S. Shi

PREPARED FOR THE STATE OF CALIFORNIA DEPARTMENT OF TRANSPORTATION

R. Manzanarez
PROJECT ENGINEER

BRIDGE NO. 34-0006L/R
KILOMETER POST 13.2/13.9

SAN FRANCISCO OAKLAND BAY BRIDGE
EAST SPAN SEISMIC SAFETY PROJECT
SELF-ANCHORED SUSPENSION BRIDGE (SUPERSTRUCTURE & TOWER)

BIKEPATH DETAILS NO.6

ORIGINAL SCALE IN MILLIMETERS FOR REDUCED PLANS 0 10 20 30 40 50 60 70 80 90 100

CU 04
EA 0120F1

DISREGARD PRINTS BEARING EARLIER REVISION DATES → 05/31/01 01/08/02 07/01/02 12/19/02 09/08/04 11/13/05

SHEET 413R1 OF

FILE => I:\bb\04-0120D1\sas\contract plans and cco\cco\in progress\cco#34s1\agbwd06.dgn

100% PS&E

DATE PLOTTED => 22 MAY 2007 TIME PLOTTED => 11:41:05

USERNAME => ptom

DIST.	COUNTY	ROUTE	KILOMETER POST TOTAL PROJECT	SHEET NO.	TOTAL SHEETS
04	SF	80	13.2/13.9	831R1	1204

Caltrans Metric

REGISTERED ENGINEER - CIVIL

12-6-04
PLANS APPROVAL DATE

REGISTERED PROFESSIONAL ENGINEER — Tien Hung Ho — No. C 43990 — Exp. 6/30/07 — CIVIL — STATE OF CALIFORNIA

The State of California or its officers or agents shall not be responsible for the accuracy or completeness of electronic copies of this plan sheet.

T.Y. LIN / MOFFATT & NICHOL
825 BATTERY STREET
SAN FRANCISCO, CA 94111

To get to the Caltrans web site, go to: http://www.dot.ca.gov

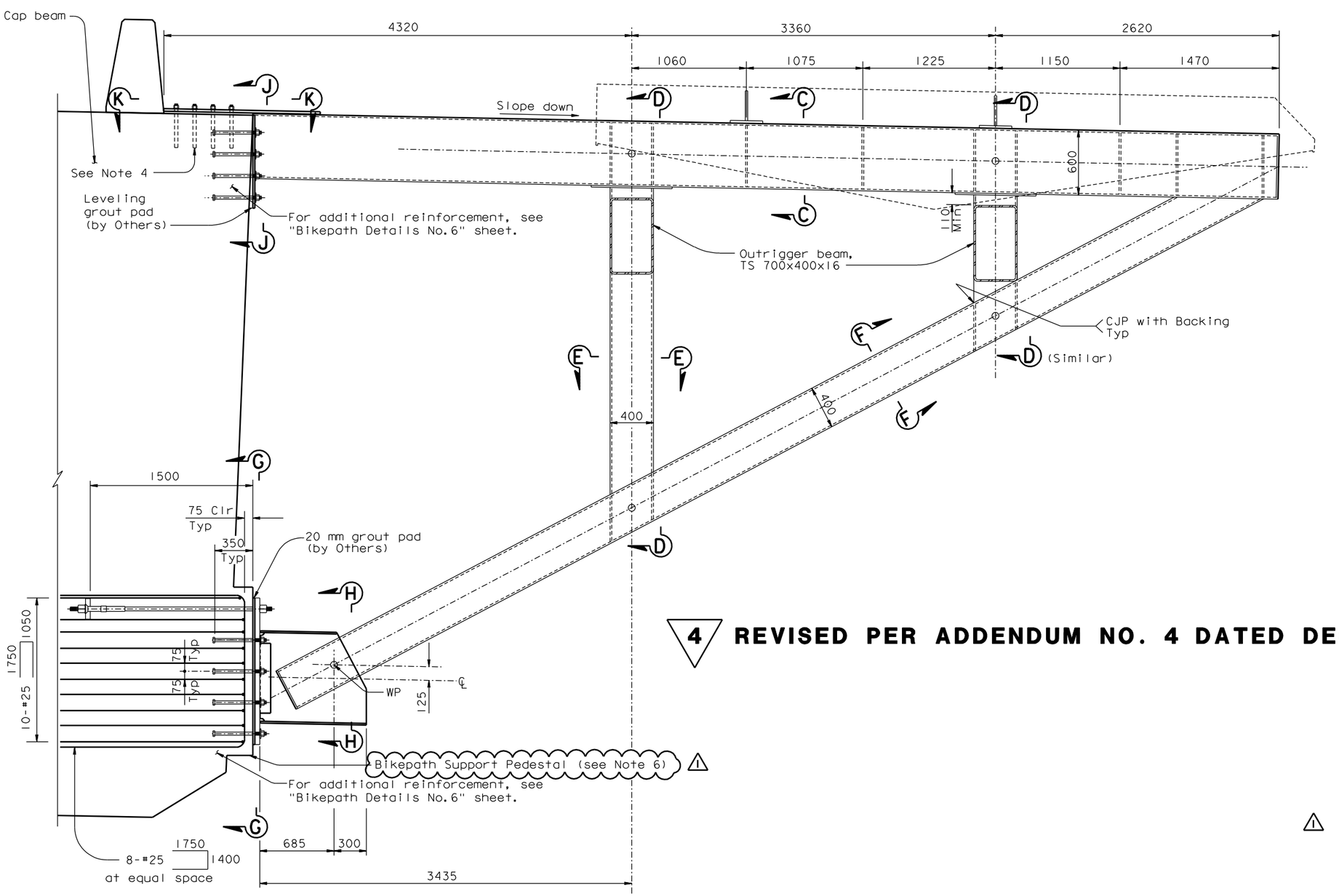

4 **REVISED PER ADDENDUM NO. 4 DATED DECEMBER 9, 2005**

4 **SECTION B-B** Cantilever truss (Between PP 7 & PP 8)
1:20

MARK	DATE	DESCRIPTIONS	BY	CH'D	CCO#
1	05/04/07	W2 CAP BEAM ISD RESOLUTION	JD	TH	34S1

REVISIONS

CONTRACT CHANGE ORDER NO. ____
SHEET ___ OF ___

NOTES:

1. For outrigger truss, see "Bikepath Details No.8" sheet.
2. For Sections J-J and K-K, see "Bikepath Details No.6" sheet.
3. For Sections C-C through H-H, see "Bikepath Details No.8" sheet.
4. Anchor bolts shall be ATM A345 Gr BC and grouted. Alternatively, the Contractor may provide M24x290 resin capsule anchors. Contractor shall furnish anchor bolts and core holes for their installation by Others. Installation of anchor bolts is not part of this Contract. (1)
5. Cantilever truss 1, truss 2 and outrigger beam to be installed by Others after demolition of existing structure.
6. The Contractor may pour the Bikepath Support Pedestals in two stages to suit his means and methods. Details shall be submitted to the Engineer for review and approval. (1)

ALL DIMENSIONS ARE IN MILLIMETERS UNLESS OTHERWISE SHOWN

SAN FRANCISCO OAKLAND BAY BRIDGE
EAST SPAN SEISMIC SAFETY PROJECT
SELF-ANCHORED SUSPENSION BRIDGE
(SUPERSTRUCTURE & TOWER)

BIKEPATH DETAILS No. 7

R. Valizadeh/V. Toan/Y.L./W.L./F.C.
DESIGN OVERSIGHT
SIGN OFF DATE 05/04/07

	BY	CHECKED
DESIGN	T. Ho	T. McMeans
DETAILS	R. Xu	P. Ritchie
QUANTITIES	C. Bernardo	S. Shi

PREPARED FOR THE STATE OF CALIFORNIA DEPARTMENT OF TRANSPORTATION

R. Manzanarez
PROJECT ENGINEER

BRIDGE NO. 34-0006L/R
KILOMETER POST 13.2/13.9

Rev. Date: 5-18-98

ORIGINAL SCALE IN MILLIMETERS FOR REDUCED PLANS 0 10 20 30 40 50 60 70 80 90 100

CU 04
EA 0120F1

DISREGARD PRINTS BEARING EARLIER REVISION DATES → 05/31/01 04/08/02 07/04/02 12/19/02 11/13/05

SHEET 414R1 OF

FILE => I:\bb\04-012001\sas\contract plans and cco\cco\in progress\cco#34s1\agbwd07.dgn

USERNAME => ptom DATE PLOTTED => 22 MAY 2007 TIME PLOTTED => 11:39:52

100% PS&E

DIST.	COUNTY	ROUTE	KILOMETER POST TOTAL PROJECT	SHEET NO.	TOTAL SHEETS
04	SF	80	13.2/13.9	832R1	1204

REGISTERED ENGINEER - CIVIL

12-06-04

PLANS APPROVAL DATE

The State of California or its officers or agents shall not be responsible for the accuracy or completeness of electronic copies of this plan sheet.

REGISTERED PROFESSIONAL ENGINEER Tien Hung Ho No. C 43990 Exp. 6/30/07 CIVIL STATE OF CALIFORNIA

T.Y. LIN / MOFFATT & NICHOL
825 BATTERY STREET
SAN FRANCISCO, CA 94111

To get to the Caltrans web site, go to: http://www.dot.ca.gov

Caltrans Metric

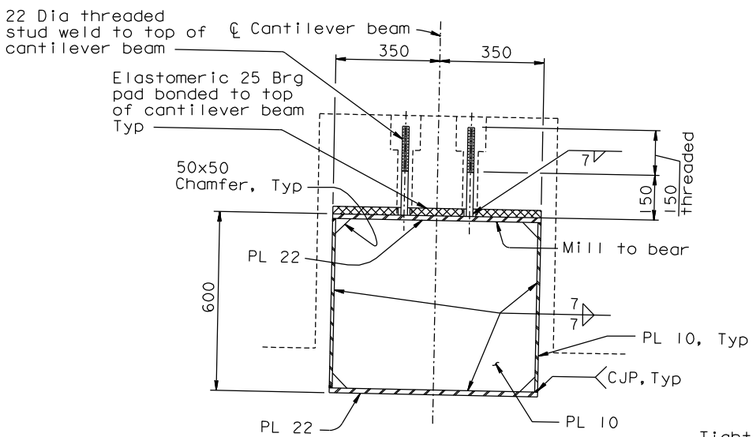

SECTION C-C
1:10

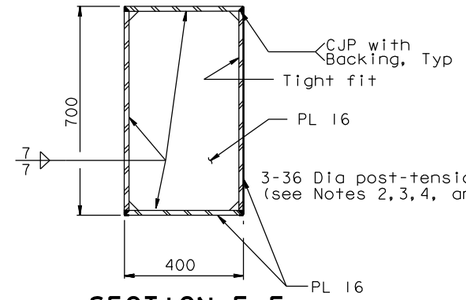

SECTION E-E
1:10

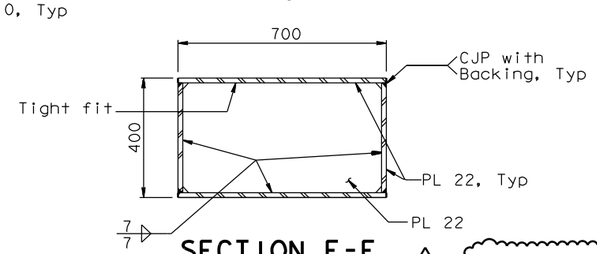

SECTION F-F
1:10

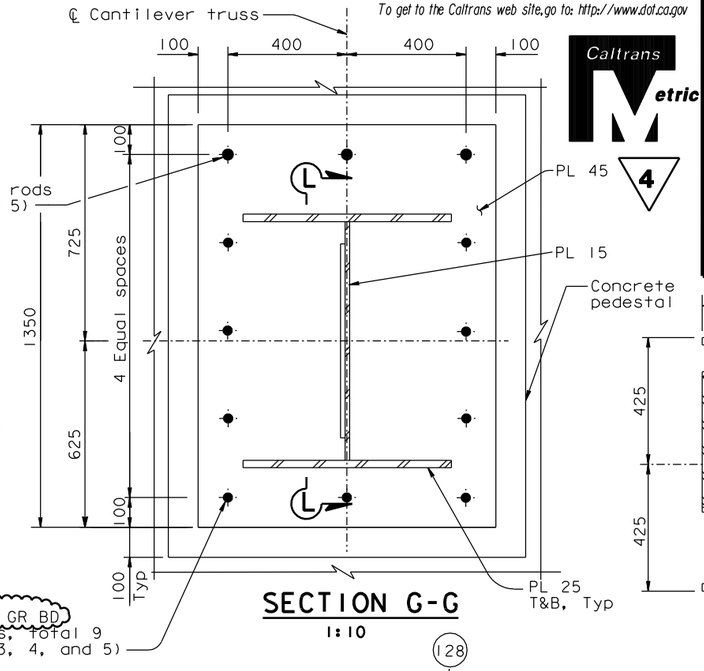

SECTION G-G
1:10

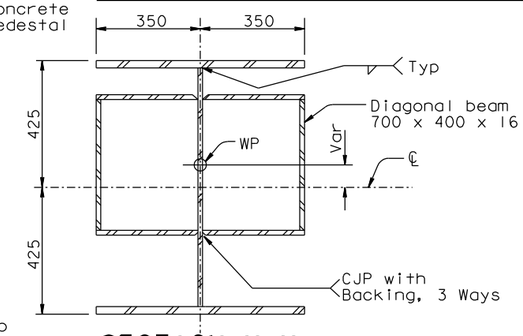

SECTION H-H
1:10

MARK	DATE	DESCRIPTIONS	BY	CH'D	CCO#
1	05/04/07	W2 CAP BEAM ISD RESOLUTION	JD	TH	34S1

REVISIONS

CONTRACT CHANGE ORDER NO. _____
SHEET ___ OF ___

4 **REVISED PER ADDENDUM NO. 4 DATED DECEMBER 9, 2005**

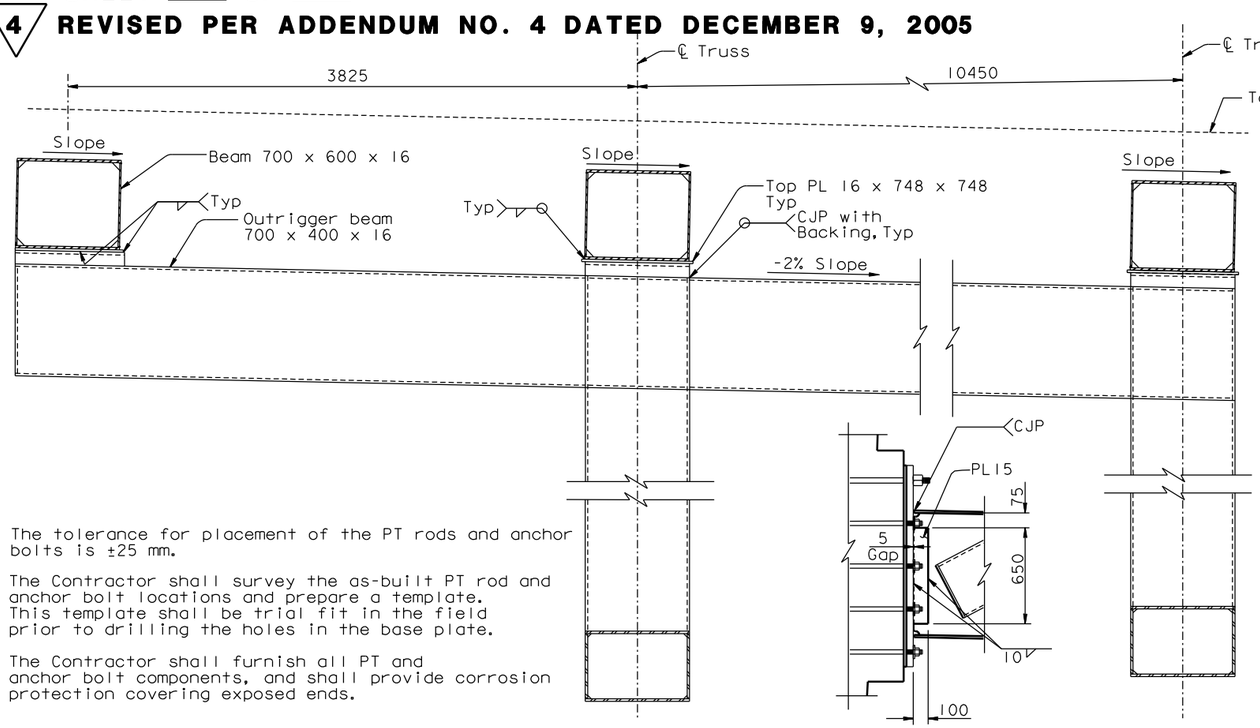

SECTION D-D
1:20

SECTION L-L
1:20

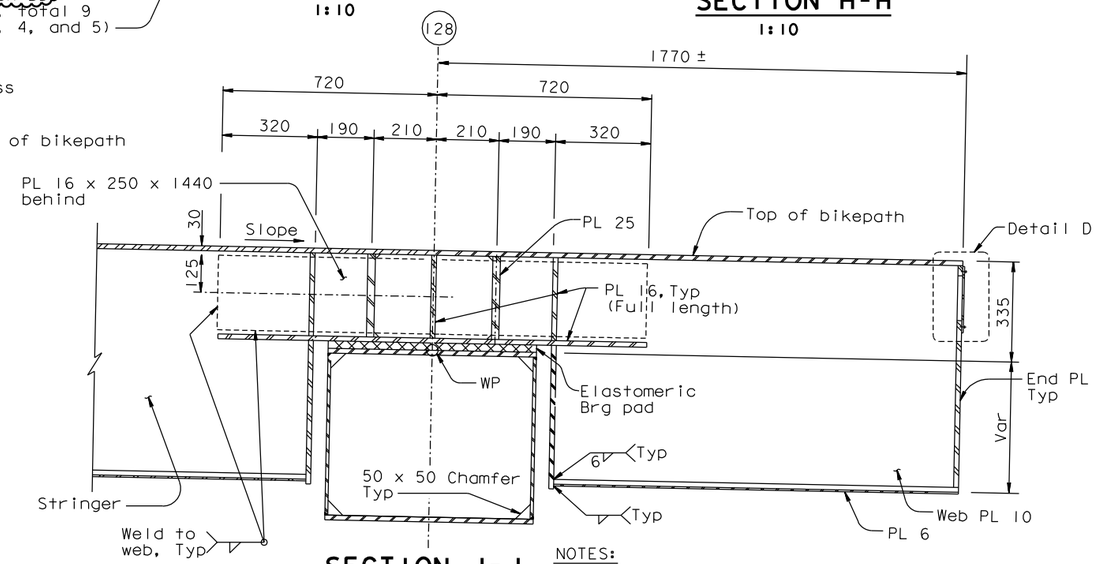

SECTION J-J
1:10

3. The tolerance for placement of the PT rods and anchor bolts is ±25 mm.
4. The Contractor shall survey the as-built PT rod and anchor bolt locations and prepare a template. This template shall be trial fit in the field prior to drilling the holes in the base plate.
5. The Contractor shall furnish all PT and anchor bolt components, and shall provide corrosion protection covering exposed ends.

NOTES:

1. For Detail D, see "Bikepath Details No.5" sheet.
2. PT rods are ASTM A722 high strength 36 Dia rods (Fu=1030 MPa), with standard galvanized steel ducts, unless specified otherwise. The locking force of 734 kN to be applied by Others. The Contractor may substitute the PT duct with a PT supplier recommended debonding tape, subject to review and approval of the Engineer. If the PT duct substitution is approved by the Engineer, the spherical nut inside the W2 cap beam is not required.

ALL DIMENSIONS ARE IN MILLIMETERS UNLESS OTHERWISE SHOWN

R. Valizadeh/V. Toan/Y.L./W.L./F.C.
DESIGN OVERSIGHT
Roya Valizadeh / Vong Toan / Y. Liu
SIGN OFF DATE 05/04/07

Rev. Date: 5-18-98

	BY	CHECKED
DESIGN	T. Ho	T. McMeans
DETAILS	R. Xu	P. Ritchie
QUANTITIES	C. Bernardo	S. Shi

ORIGINAL SCALE IN MILLIMETERS FOR REDUCED PLANS 0 10 20 30 40 50 60 70 80 90 100

PREPARED FOR THE STATE OF CALIFORNIA DEPARTMENT OF TRANSPORTATION

R. Manzanarez
PROJECT ENGINEER

CU 04
EA 0120F1

BRIDGE NO. 34-0006L/R
KILOMETER POST 13.2/13.9

DISREGARD PRINTS BEARING EARLIER REVISION DATES

REVISION DATES (PRELIMINARY STAGE ONLY): 05/24/01 04/08/02 07/01/02 12/19/02 11/13/05

SHEET 415R1 OF

SAN FRANCISCO OAKLAND BAY BRIDGE EAST SPAN SEISMIC SAFETY PROJECT
SELF-ANCHORED SUSPENSION BRIDGE (SUPERSTRUCTURE & TOWER)

BIKEPATH DETAILS NO. 8

FILE => I:\bb\04-012001\sas\contract plans and cco\cco\in progress\cco#34s1\agbwd08.dgn

USERNAME => ptom DATE PLOTTED => 22 MAY 2007 TIME PLOTTED => 11:37:00

100% PS&E

DIST.	COUNTY	ROUTE	KILOMETER POST TOTAL PROJECT	SHEET NO.	TOTAL SHEETS
04	SF	80	13.2/13.9	891R1	1204

Caltrans Metric

REGISTERED ENGINEER - CIVIL

12-6-04
PLANS APPROVAL DATE

REGISTERED PROFESSIONAL ENGINEER Tien Hung Ho No. C 43990 Exp. 6/30/07 CIVIL STATE OF CALIFORNIA

The State of California or its officers or agents shall not be responsible for the accuracy or completeness of electronic copies of this plan sheet.

T.Y. LIN / MOFFATT & NICHOL
825 BATTERY STREET
SAN FRANCISCO, CA 94111

Caltrans now has a web site! To get to the web site, go to: http://www.dot.ca.gov

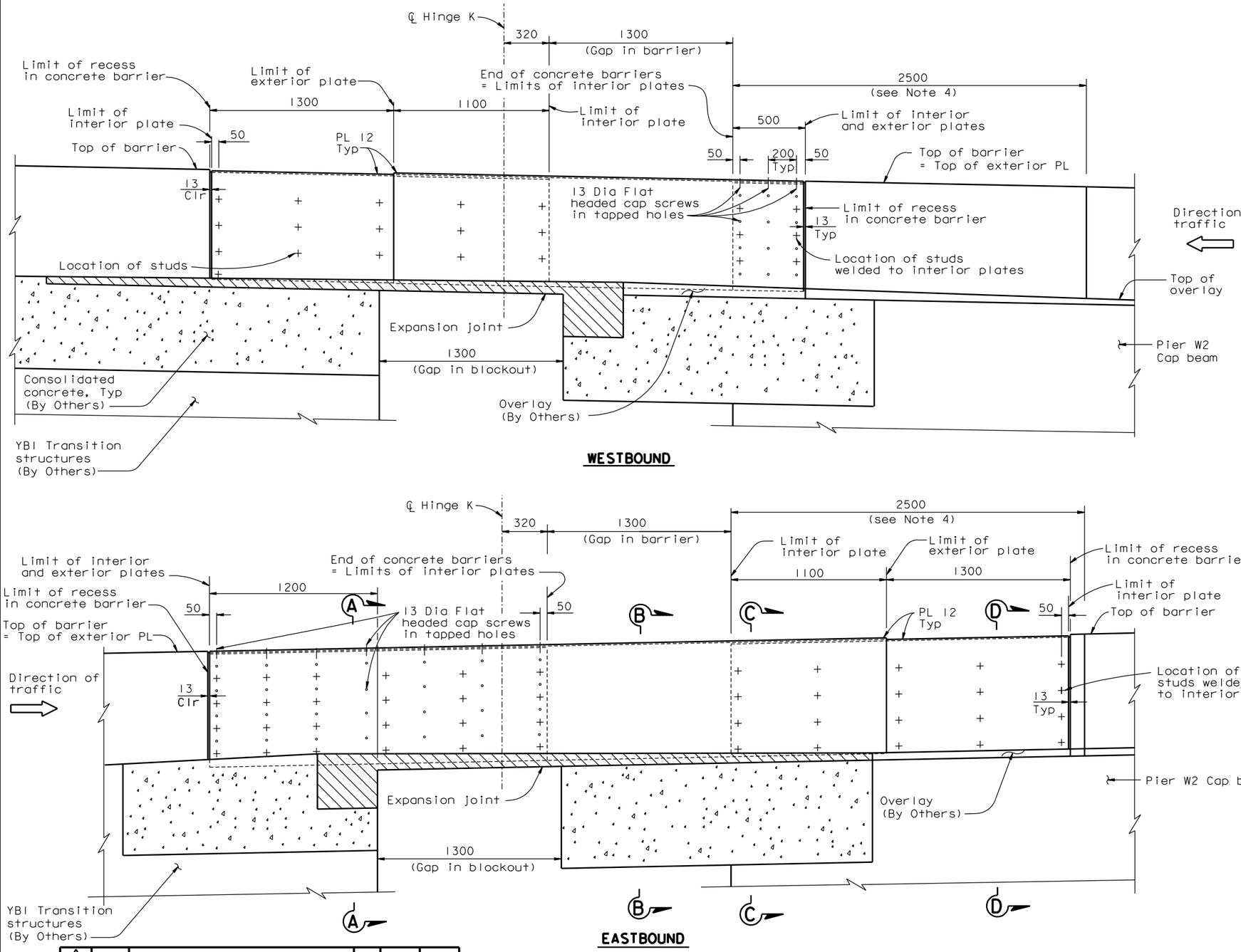

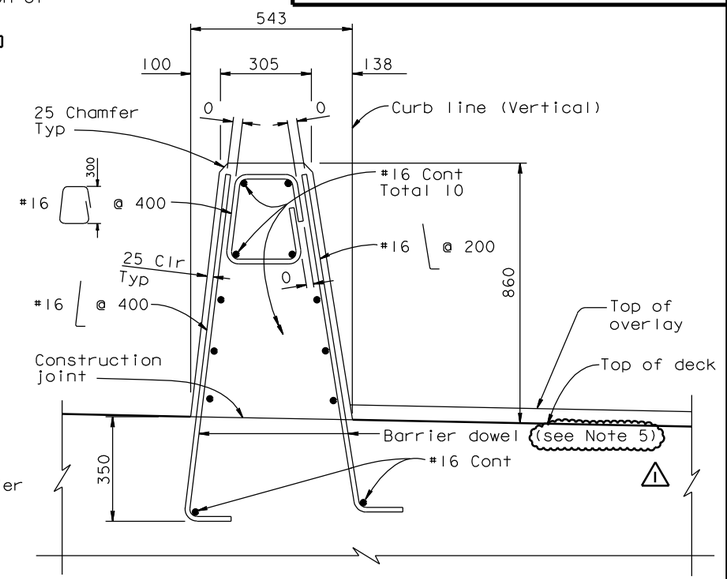

CONCRETE BARRIER TYPE 732 (MODIFIED)

1:10 For Pier W2 Cap beam only

LEGEND:

-Expansion Joint

-Consolidated concrete

NOTES:

1. For Sections A-A, B-B, C-C and D-D, see "Barrier Details No.4" sheet.
2. For expansion joint details, see "Hinge K Expansion Joint Details" sheets.
3. All reinforcement in concrete barrier shall be epoxy coated.
4. In this region, only barrier dowels shall be constructed. Other barrier reinforcement and barrier concrete are by others.
5. Barrier dowels may be installed with a mechanical coupler splice. Couplers shall meet ultimate splice criteria connected bars.

MARK	DATE	DESCRIPTIONS	BY	CH'D	CCO#
1	05/04/07	W2 CAP BEAM ISD RESOLUTION	JD	TH	34S1

REVISIONS

CONTRACT CHANGE ORDER NO. ____
SHEET ___ OF ___

BARRIER AT HINGE K - ELEVATION

1:15

ALL DIMENSIONS ARE IN MILLIMETERS UNLESS OTHERWISE SHOWN

SAN FRANCISCO OAKLAND BAY BRIDGE
EAST SPAN SEISMIC SAFETY PROJECT
SELF-ANCHORED SUSPENSION BRIDGE
(SUPERSTRUCTURE & TOWER)

BARRIER DETAILS NO. 3

R. Valizadeh/V. Toan/Y.L./W.L./F.C.
DESIGN OVERSIGHT
SIGN OFF DATE 05/04/07

	BY	CHECKED
DESIGN	T. Ho	M. Nader
DETAILS	G. Baker	M. Nader
QUANTITIES	S. Shi	K. Cormier

PREPARED FOR THE STATE OF CALIFORNIA DEPARTMENT OF TRANSPORTATION

R. Manzanarez
PROJECT ENGINEER

BRIDGE NO. 34-0006L/R
KILOMETER POST 13.2/13.9

CU 04
EA 0120F1

Rev. Date: 5-18-98

ORIGINAL SCALE IN MILLIMETERS FOR REDUCED PLANS 0 10 20 30 40 50 60 70 80 90 100

DISREGARD PRINTS BEARING EARLIER REVISION DATES

REVISION DATES (PRELIMINARY STAGE ONLY) 08/02/99 05/31/01 04/08/02 07/04/02 12/19/02 07/18/03

SHEET 474R1 OF

FILE => I:\bb\04-012001\sas\contract plans and cco\cco\in progress\cco#34s1\akbar01a-1.dgn

USERNAME => ptom DATE PLOTTED => 22 MAY 2007 TIME PLOTTED => 11:34:14

100% PS&E