DIST.	COUNTY	ROUTE	KILOMETER POST TOTAL PROJECT	SHEET NO.	TOTAL SHEETS
04	SF	80	13.2/13.9	825R1	1204

REGISTERED ENGINEER - CIVIL

12-6-04
PLANS APPROVAL DATE

The State of California or its officers or agents shall not be responsible for the accuracy or completeness of electronic copies of this plan sheet.

REGISTERED PROFESSIONAL ENGINEER Tien Hung Ho No. C 43990 Exp. 6/30/09 CIVIL STATE OF CALIFORNIA

T.Y. LIN / MOFFATT & NICHOL
825 BATTERY STREET
SAN FRANCISCO, CA 94111

Caltrans now has a web site! To get to the web site, go to: http://www.dot.ca.gov

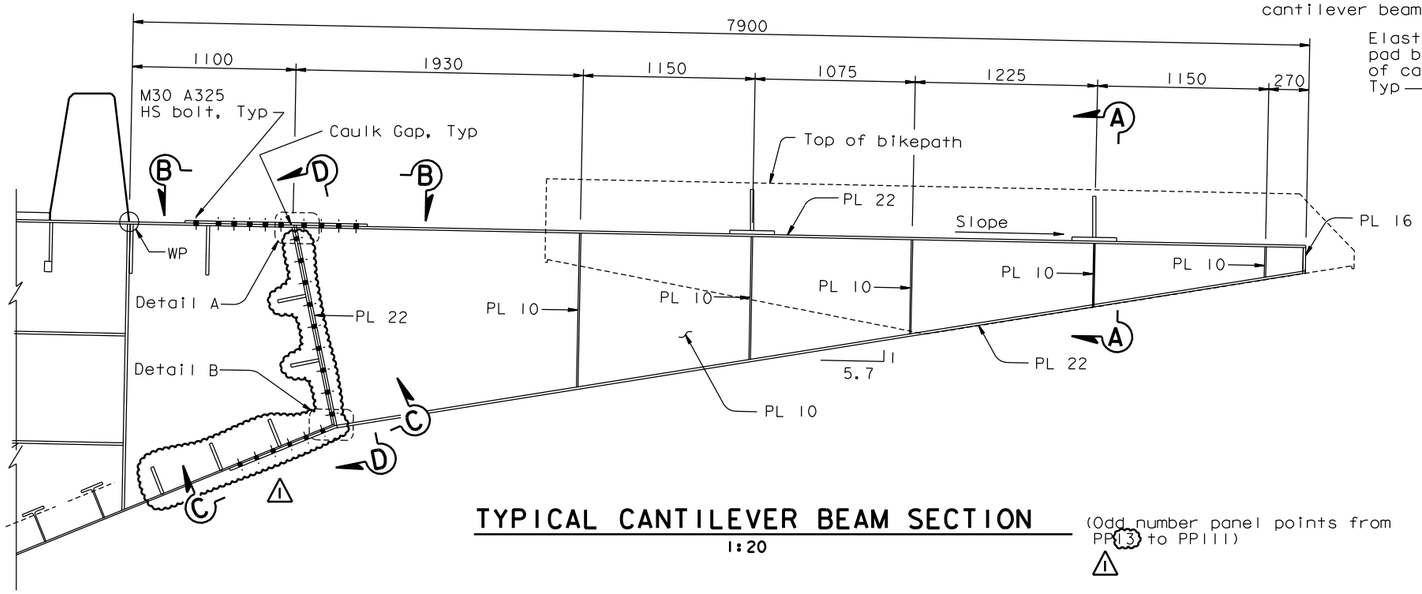

TYPICAL CANTILEVER BEAM SECTION
1:20

(Odd number panel points from PP13 to PP111)

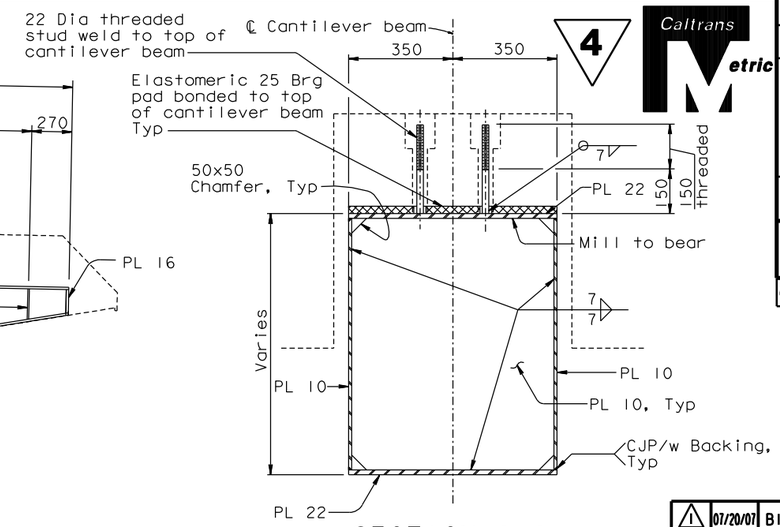

SECTION A-A
1:10

MARK	DATE	DESCRIPTIONS	BY	CH'D	CCO#
1	01/20/07	BIKEPATH BRACKETS	GB	TH	33

REVISIONS

CONTRACT CHANGE ORDER NO. ____
SHEET ___ OF ___

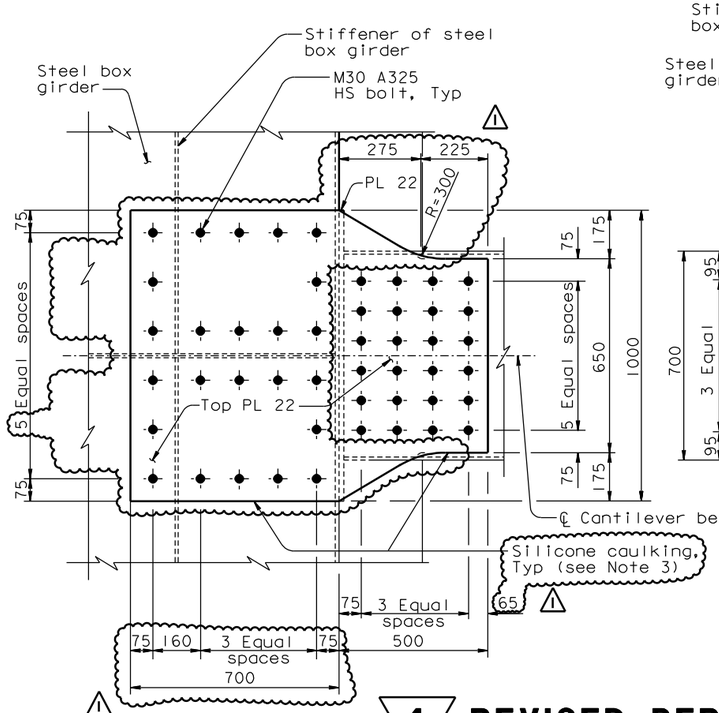

SECTION B-B
1:10

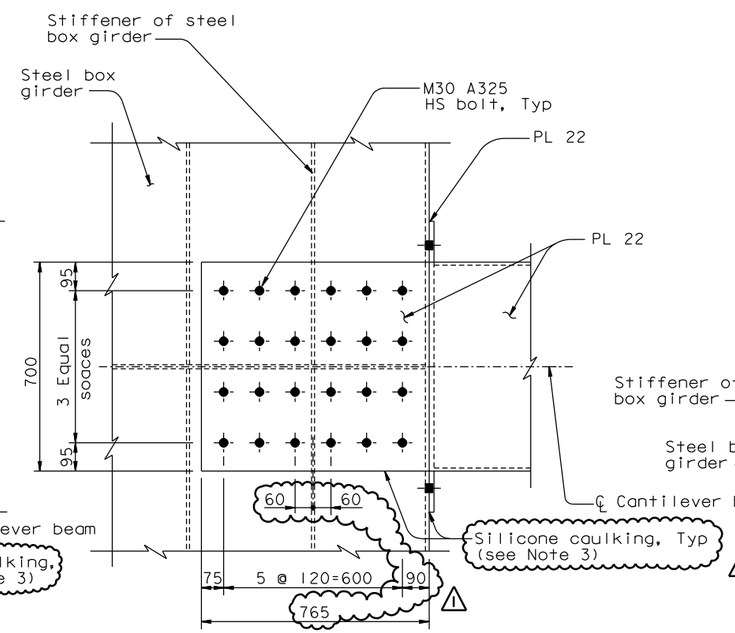

SECTION C-C
1:10

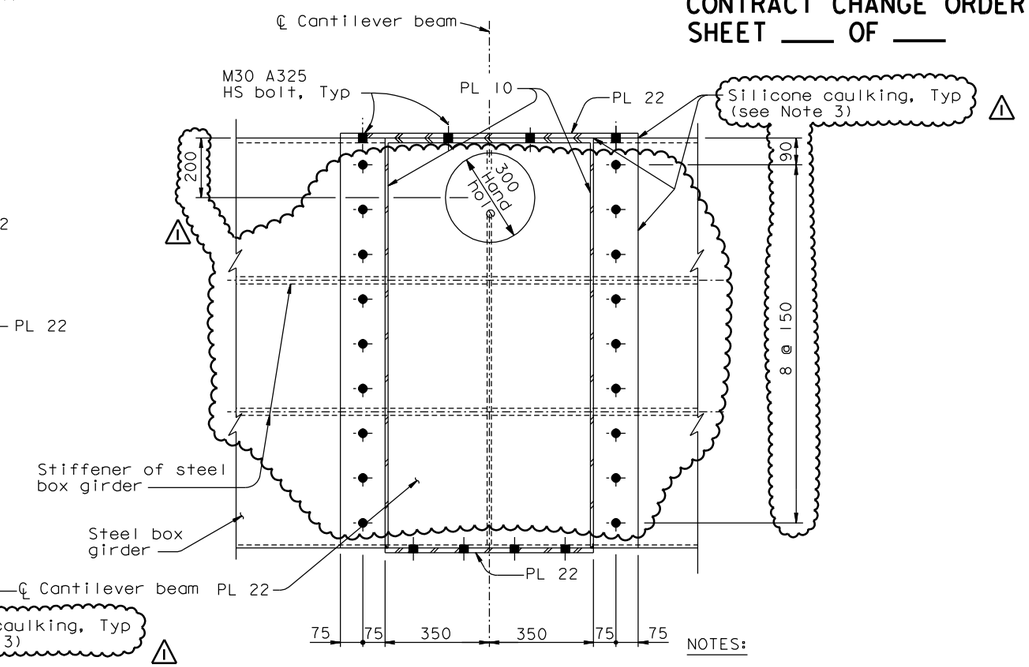

SECTION D-D
1:10

NOTES:

1. For location of typical cantilever beam, see "Bikepath Layout" sheets.
2. For Details A and B, see "Suspender Bracket Details No.2" sheet.
3. Silicone caulking shall be provided along all edges of bolted connection between bikepath cantilever beam and box girder.

4 REVISED PER ADDENDUM NO. 4 DATED DECEMBER 9, 2005

ALL DIMENSIONS ARE IN MILLIMETERS UNLESS OTHERWISE SHOWN

SAN FRANCISCO OAKLAND BAY BRIDGE
EAST SPAN SEISMIC SAFETY PROJECT
SELF-ANCHORED SUSPENSION BRIDGE (SUPERSTRUCTURE & TOWER)

BIKEPATH DETAILS NO. 1

R. Valizadeh/V. Toan/Y.L./W.L./F.C.
DESIGN OVERSIGHT
SIGN OFF DATE 07/20/07

	BY	CHECKED
DESIGN	T. Ho	T. McMeans
DETAILS	R. Xu	P. Ritchie
QUANTITIES	C. Bernardo	S. Shi

PREPARED FOR THE STATE OF CALIFORNIA DEPARTMENT OF TRANSPORTATION

R. Manzanarez
PROJECT ENGINEER

BRIDGE NO. 34-0006L/R
KILOMETER POST 13.2/13.9

CU 04
EA 0120F1

DISREGARD PRINTS BEARING EARLIER REVISION DATES

REVISION DATES (PRELIMINARY STAGE ONLY): 05/15/99 08/02/99 05/24/01 04/08/02 07/09/02 12/19/02 11/13/05

SHEET 408R1 OF

Rev. Date: 5-18-98

ORIGINAL SCALE IN MILLIMETERS FOR REDUCED PLANS 0 10 20 30 40 50 60 70 80 90 100

FILE => I:\bb\04-0120F1\sas\contract plans and cco\cco\in progress\cco#33\agbwd01.dgn

USERNAME => vignatovs DATE PLOTTED => 25 JUL 2007 TIME PLOTTED => 12:06:26

100% PS&E