DIST.	COUNTY	ROUTE	KILOMETER POST TOTAL PROJECT	SHEET NO.	TOTAL SHEETS
04	SF	80	13.2/13.9	825R1	1204

REGISTERED ENGINEER - CIVIL

12-6-04

PLANS APPROVAL DATE

The State of California or its officers or agents shall not be responsible for the accuracy or completeness of electronic copies of this plan sheet.

REGISTERED PROFESSIONAL ENGINEER Tien Hung Ho No. C 43990 Exp. 6/30/09 CIVIL STATE OF CALIFORNIA

T.Y. LIN / MOFFATT & NICHOL
825 BATTERY STREET
SAN FRANCISCO, CA 94111

Caltrans now has a web site! To get to the web site, go to: http://www.dot.ca.gov

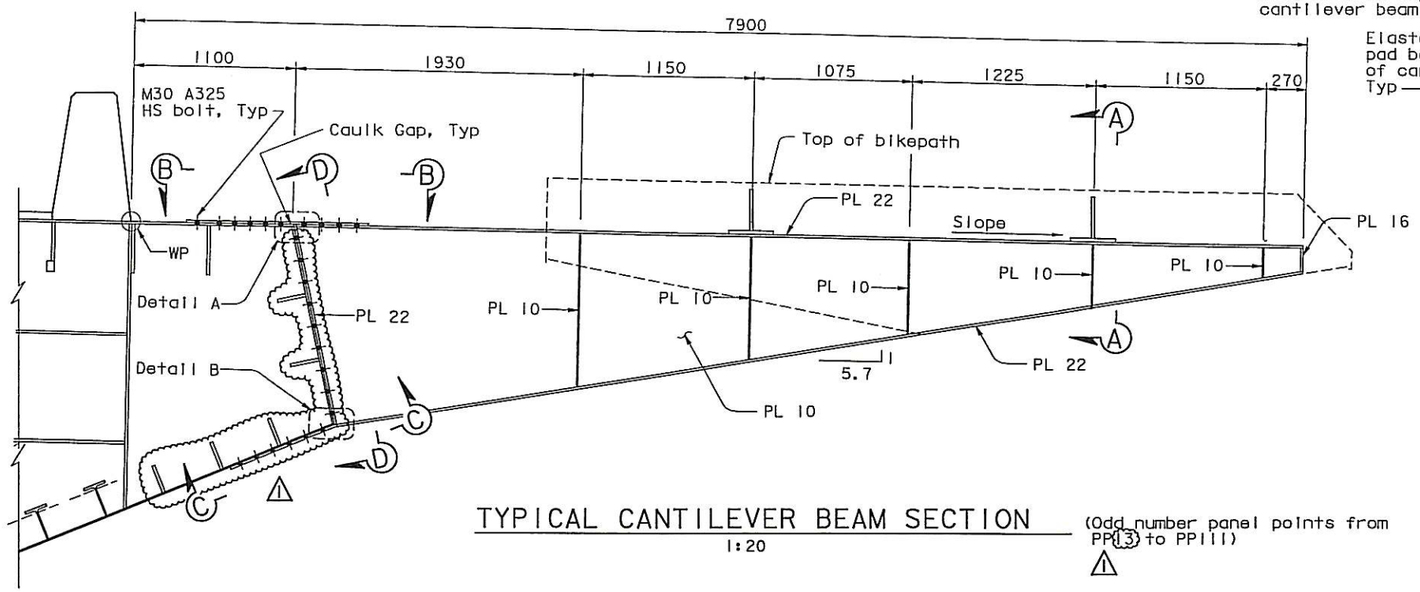

TYPICAL CANTILEVER BEAM SECTION
1:20

(Odd number panel points from PP13 to PP111)

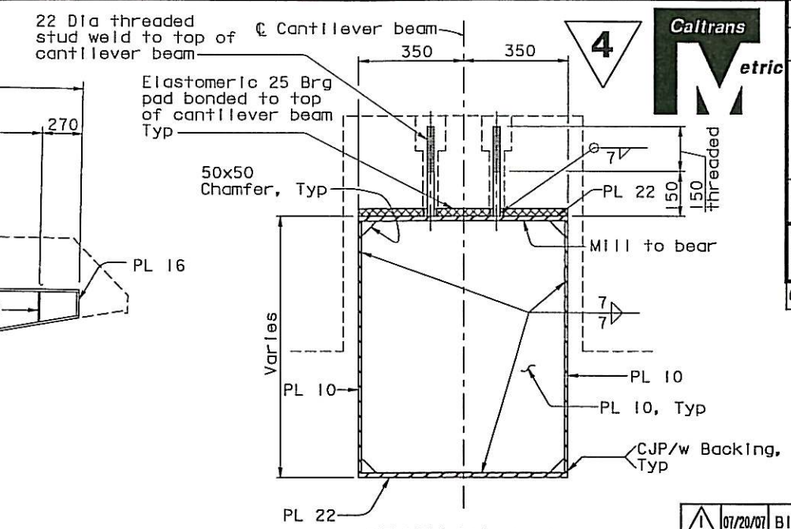

SECTION A-A
1:10

MARK	DATE	DESCRIPTIONS	BY	CH'D	CCO#
1	07/20/07	BIKEPATH BRACKETS	GB	TH	33

REVISIONS

CONTRACT CHANGE ORDER NO. ____
SHEET ____ OF ____

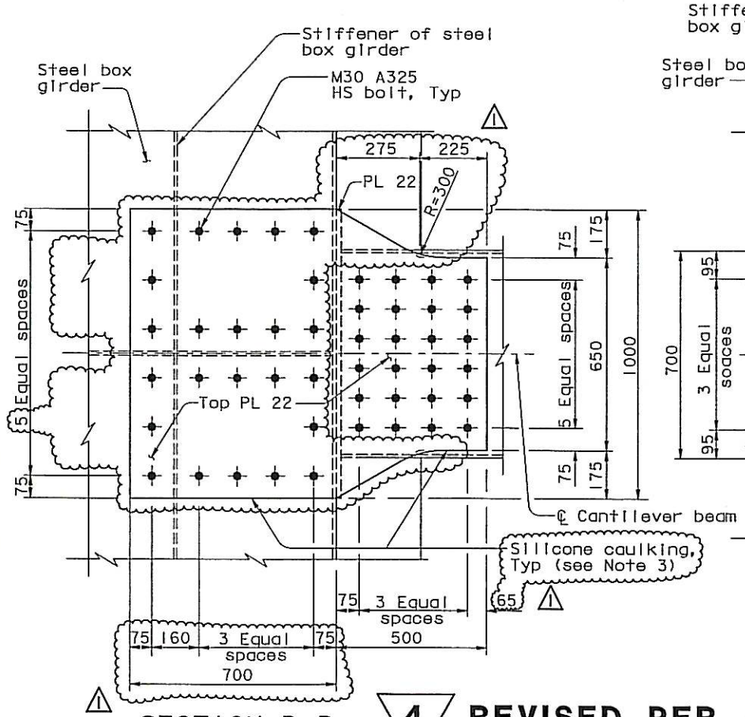

SECTION B-B
1:10

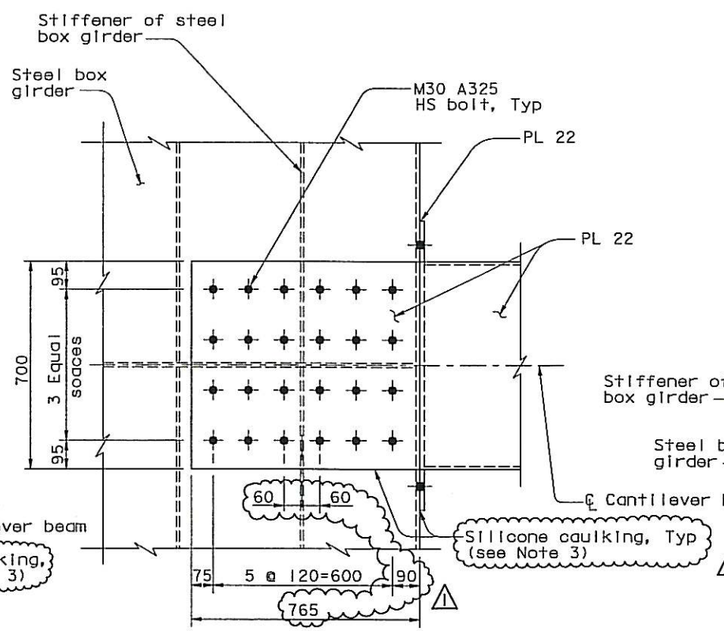

SECTION C-C
1:10

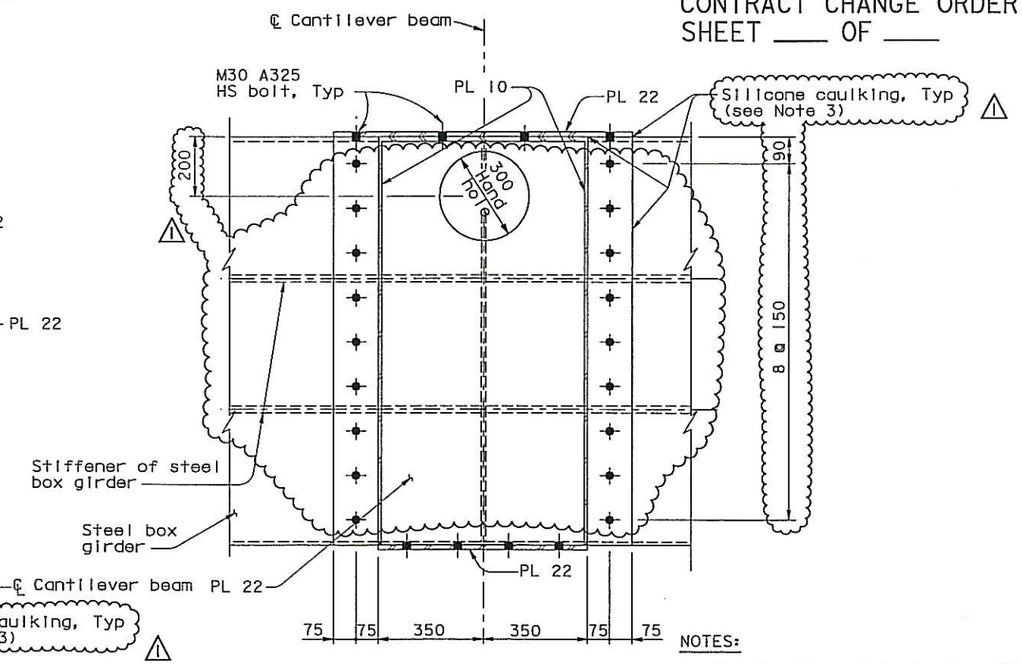

SECTION D-D
1:10

NOTES:

1. For location of typical cantilever beam, see "Bikepath Layout" sheets.
2. For Details A and B, see "Suspender Bracket Details No.2" sheet.
3. Silicone caulking shall be provided along all edges of bolted connection between bikepath cantilever beam and box girder.

4 REVISED PER ADDENDUM NO. 4 DATED DECEMBER 9, 2005

ALL DIMENSIONS ARE IN MILLIMETERS UNLESS OTHERWISE SHOWN

SAN FRANCISCO OAKLAND BAY BRIDGE
EAST SPAN SEISMIC SAFETY PROJECT
SELF-ANCHORED SUSPENSION BRIDGE
(SUPERSTRUCTURE & TOWER)

BIKEPATH DETAILS NO. 1

R. Valizadeh/V. Toan/Y.L./W.L./F.C.
DESIGN OVERSIGHT
SIGN OFF DATE 07/20/07

	BY	CHECKED
DESIGN	T. Ho	T. McMeans
DETAILS	R. Xu	P. Ritchie
QUANTITIES	C. Bernardo	S. Shi

PREPARED FOR THE STATE OF CALIFORNIA DEPARTMENT OF TRANSPORTATION

R. Manzanarez
PROJECT ENGINEER

BRIDGE NO. 34-0006L/R
KILOMETER POST 13.2/13.9

Rev. Date: 5-18-98

ORIGINAL SCALE IN MILLIMETERS FOR REDUCED PLANS 0 10 20 30 40 50 60 70 80 90 100

CU 04
EA 0120F1

DISREGARD PRINTS BEARING EARLIER REVISION DATES

REVISION DATES (PRELIMINARY STAGE ONLY) 05/15/99 08/02/99 05/31/01 04/08/02 07/01/02 12/15/02 11/13/05

SHEET 408R1 OF

FILE => I:\bb\04-012001\sas\contract plans and cco\cco\in progress\cco#33\agbwd01.dgn

USERNAME => alishansk DATE PLOTTED => 25 JUL 2007 TIME PLOTTED => 12:05:16

100 % PS&E

DIST.	COUNTY	ROUTE	KILOMETER POST TOTAL PROJECT	SHEET NO.	TOTAL SHEETS
04	SF	80	13.2/13.9	833R1	1204

Caltrans Metric

REGISTERED ENGINEER - CIVIL

12-6-04
PLANS APPROVAL DATE

REGISTERED PROFESSIONAL ENGINEER Tien Hung Ho No. C 43990 Exp. 6/30/09 CIVIL STATE OF CALIFORNIA

The State of California or its officers or agents shall not be responsible for the accuracy or completeness of electronic copies of this plan sheet.

T.Y. LIN / MOFFATT & NICHOL
825 BATTERY STREET
SAN FRANCISCO, CA 94111

To get to the web site, go to: http://www.dot.ca.gov

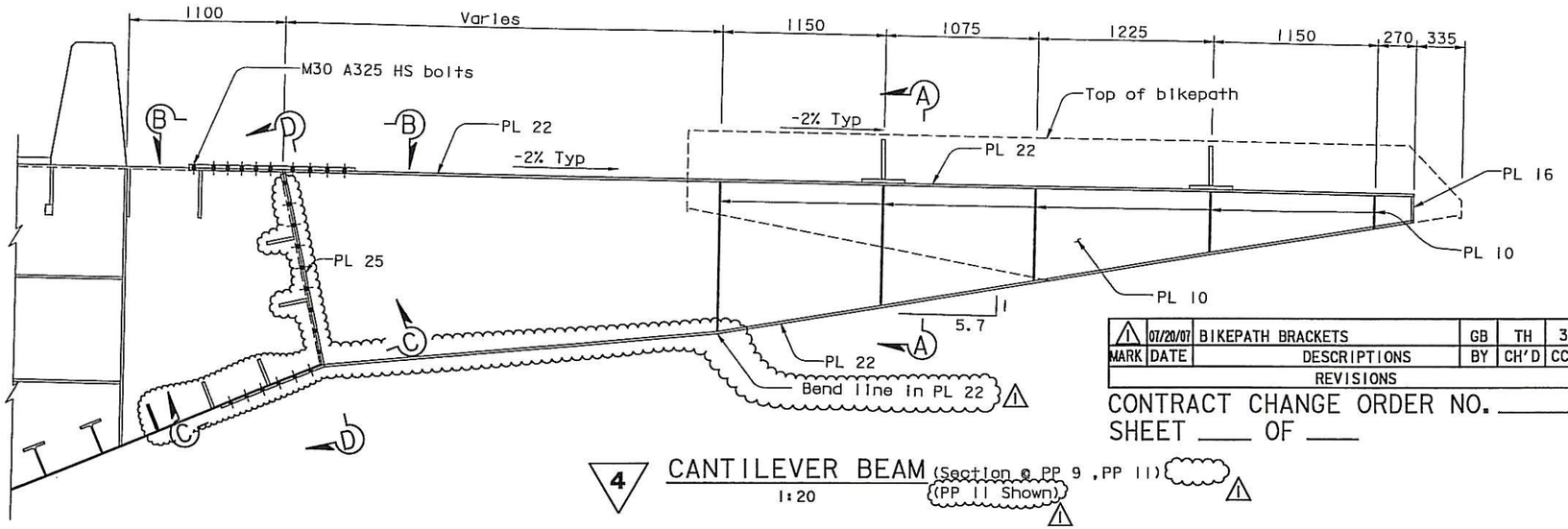

4 CANTILEVER BEAM (Section @ PP 9 , PP 11) (PP 11 Shown)
1:20

MARK	DATE	DESCRIPTIONS	BY	CH'D	CCO#
1	07/20/07	BIKEPATH BRACKETS	GB	TH	33

REVISIONS

CONTRACT CHANGE ORDER NO. ____
SHEET ____ OF ____

4 **REVISED PER ADDENDUM NO. 4 DATED DECEMBER 9, 2005**

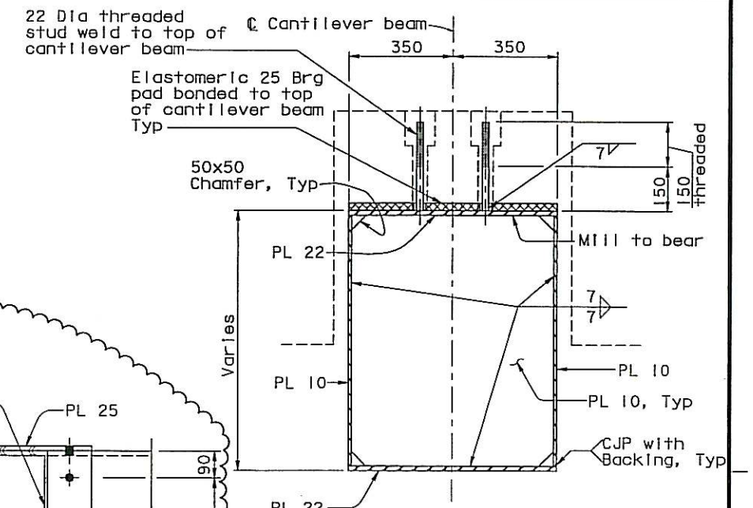

4 SECTION A-A
1:10

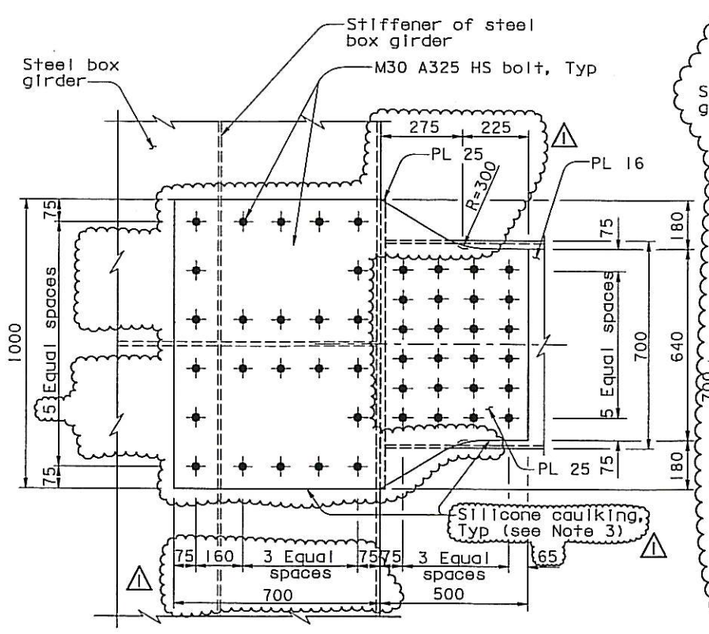

4 SECTION B-B
1:10

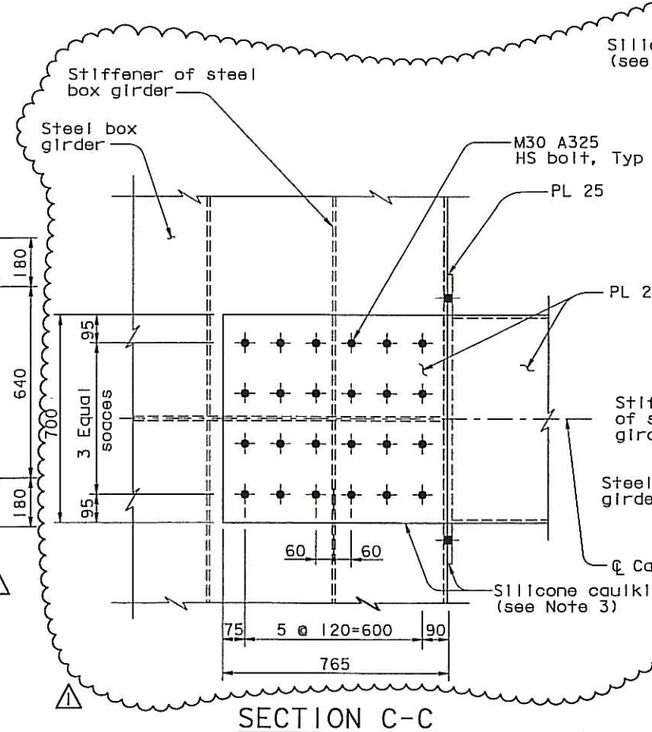

SECTION C-C
1:10

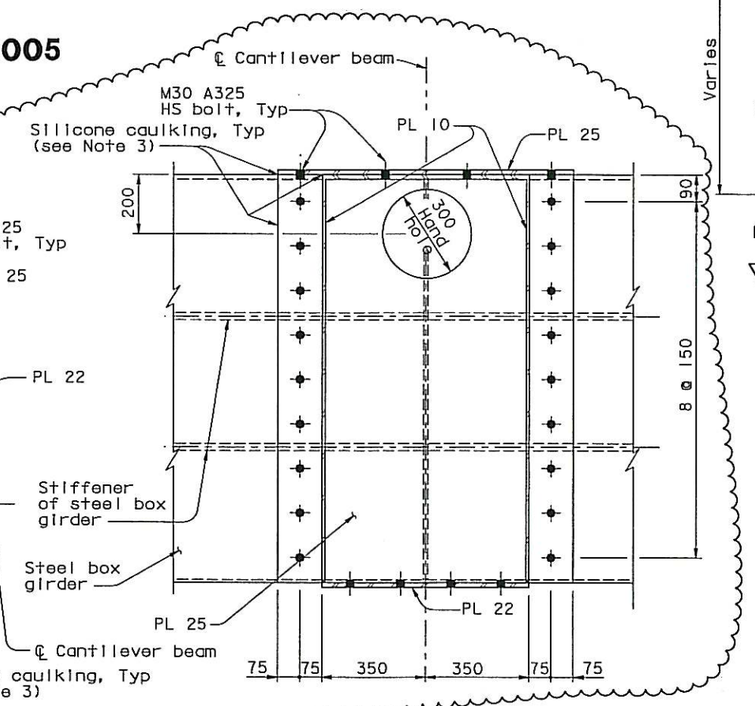

4 SECTION D-D
1:10

NOTES:

1. Bikepath deck similar to typical bikepath deck. For details, see "Bikepath Details No.3" sheet.
2. For details not shown, see "Bikepath Details No.1" sheet.
3. Silicone caulking shall be provided along edges of bolted connection between bikepath cantilever beam and box girder.

ALL DIMENSIONS ARE IN MILLIMETERS UNLESS OTHERWISE SHOWN

R. Valizadeh/V. Toan/Y.L./W.L./F.C.
DESIGN OVERSIGHT
SIGN OFF DATE 07/20/07

	BY	CHECKED
DESIGN	T. Ho	T. McMeans
DETAILS	R. Xu	P. Ritchie
QUANTITIES	C. Bernardo	S. Shi

PREPARED FOR THE STATE OF CALIFORNIA DEPARTMENT OF TRANSPORTATION

R. Manzanarez
PROJECT ENGINEER

BRIDGE NO. 34-0006L/R
KILOMETER POST 13.2/13.9

SAN FRANCISCO OAKLAND BAY BRIDGE
EAST SPAN SEISMIC SAFETY PROJECT
SELF-ANCHORED SUSPENSION BRIDGE
(SUPERSTRUCTURE & TOWER)

BIKEPATH DETAILS NO. 9

Rev. Date 5-18-98

ORIGINAL SCALE IN MILLIMETERS FOR REDUCED PLANS 0 10 20 30 40 50 60 70 80 90 100

CU 04
EA 0120F1

DISREGARD PRINTS BEARING EARLIER REVISION DATES

REVISION DATES (PRELIMINARY STAGE ONLY) 05/30/01 04/30/02 07/30/02 12/30/02 11/13/05

SHEET 416R1 OF

FILE => L:\BB\04-012001\SAS\Contract Plans and CCO\CCO\In Progress\CCO#33\agbwd09.dgn

100% PS&E

USERNAME => vignatovsky DATE PLOTTED => 25 JUL 2007 TIME PLOTTED => 11:59:01

4 REVISED PER ADDENDUM NO. 4 DATED DECEMBER 9, 2005

Caltrans Metric

DIST.	COUNTY	ROUTE	KILOMETER POST TOTAL PROJECT	SHEET NO.	TOTAL SHEETS
04	SF	80	13.2/13.9	834R1	1204

REGISTERED ENGINEER - CIVIL

12-6-04
PLANS APPROVAL DATE

REGISTERED PROFESSIONAL ENGINEER Tien Hung Ho No. C 43990 Exp. 6/30/09 CIVIL STATE OF CALIFORNIA

The State of California or its officers or agents shall not be responsible for the accuracy or completeness of electronic copies of this plan sheet.

T.Y. LIN / MOFFATT & NICHOL
825 BATTERY STREET
SAN FRANCISCO, CA 94111

To get to the web site, go to: http://www.dot.ca.gov

MARK	DATE	DESCRIPTIONS	BY	CH'D	CCO#
1	07/20/07	BIKEPATH BRACKETS	GB	TH	33

REVISIONS

CONTRACT CHANGE ORDER NO. ____
SHEET ____ OF ____

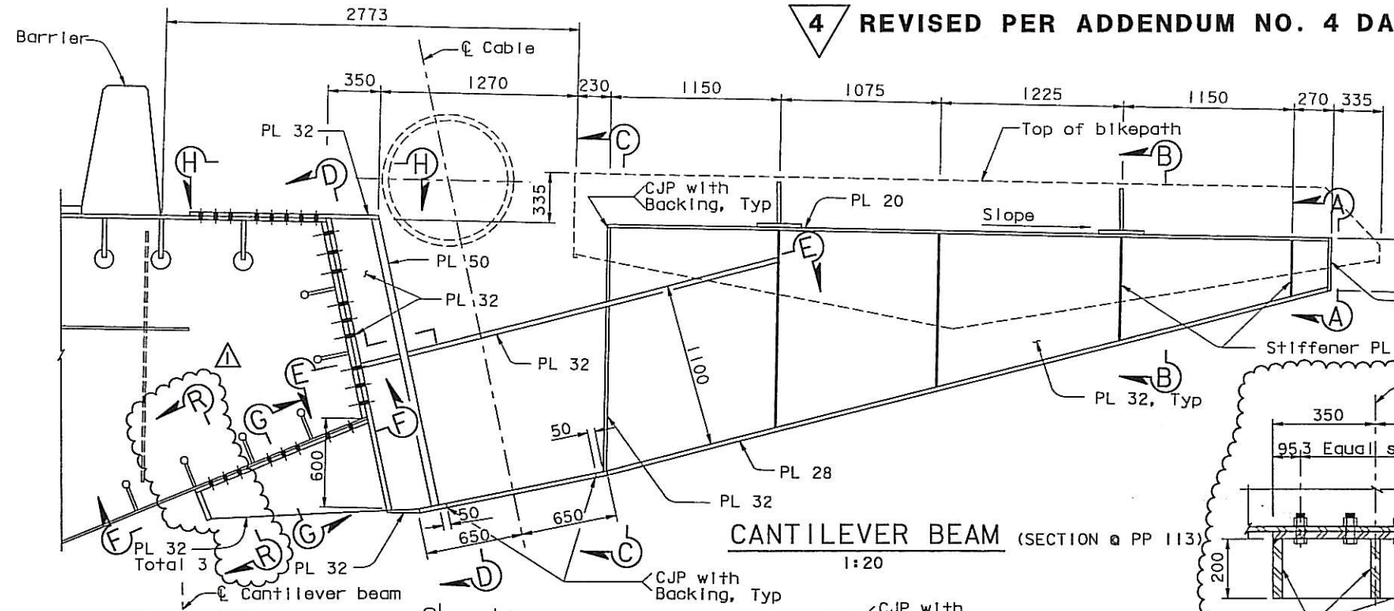

CANTILEVER BEAM (SECTION @ PP 113)
1:20

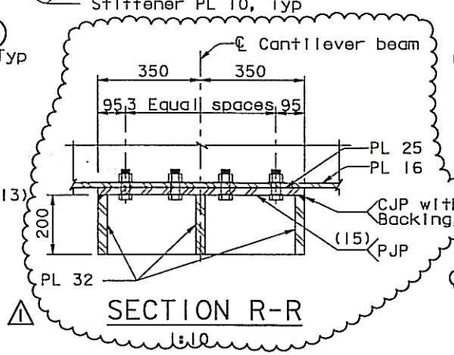

SECTION R-R
1:10

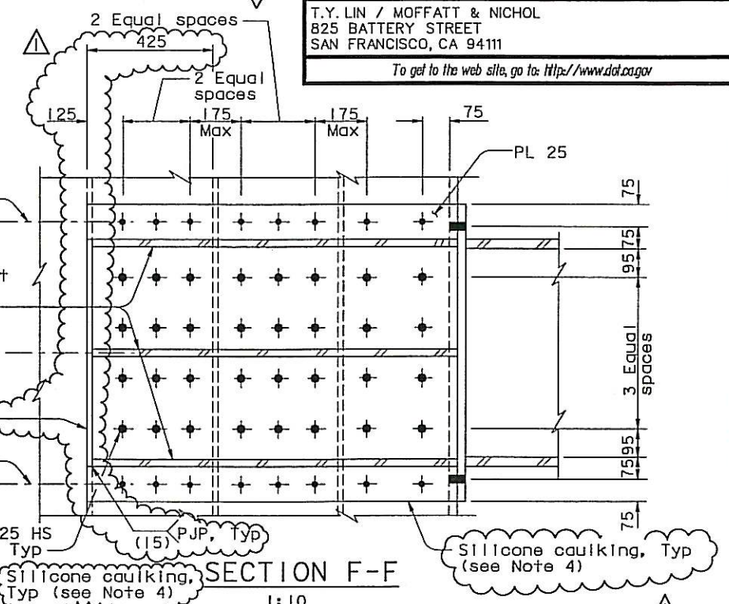

SECTION F-F
1:10

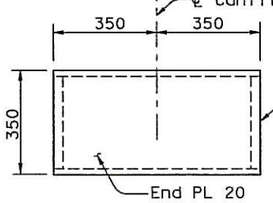

SECTION A-A
1:10

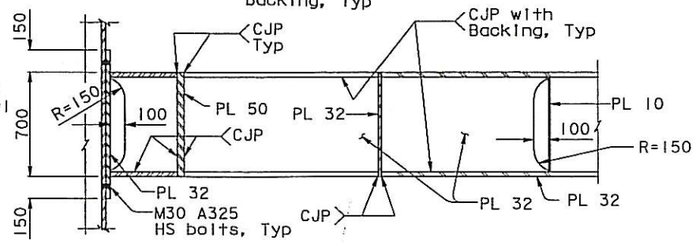

SECTION E-E
1:20

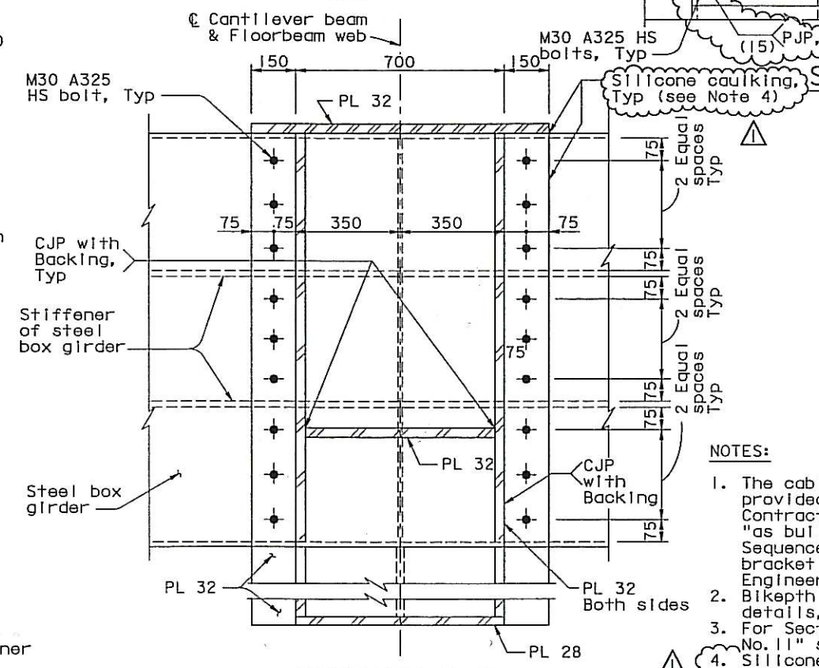

SECTION D-D
1:10

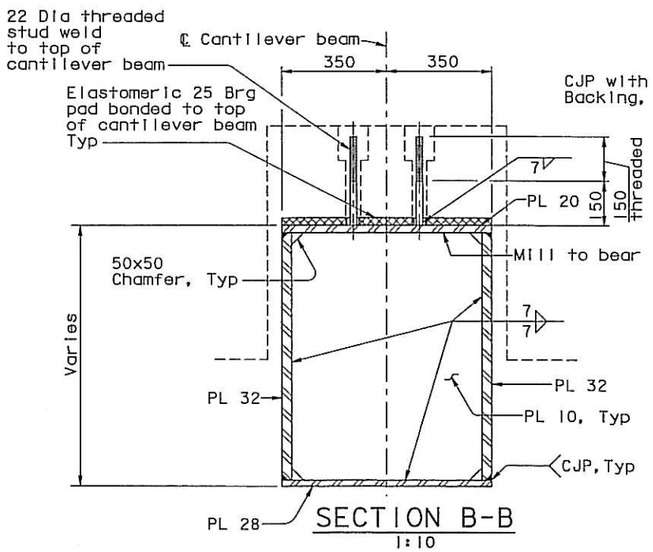

SECTION B-B
1:10

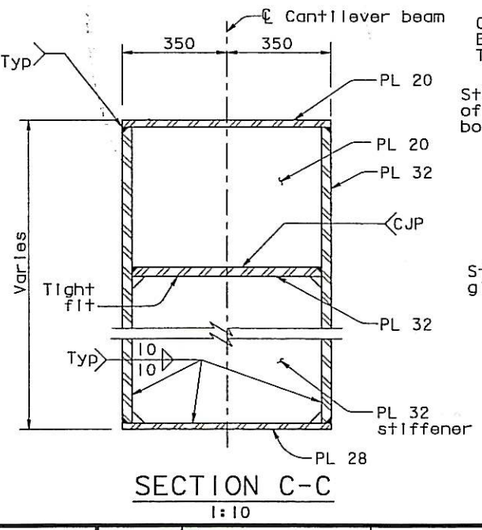

SECTION C-C
1:10

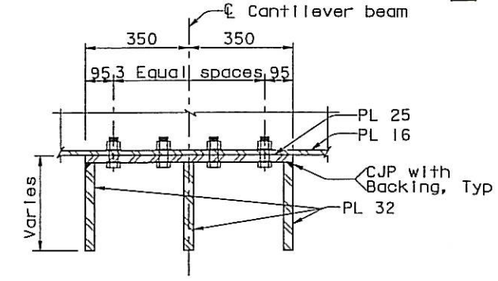

SECTION G-G
1:10

NOTES:

1. The cable location shown is based on the information provided in "Suspension Cable Layout" sheets. The Contractor shall verify these locations based on the "as built" cable profile described in "Construction Sequence" sheets. In the event of a conflict, bikepath bracket details may be revised and submitted to the Engineer for review and approval.
2. Bikepath deck similar to typical bikepath deck, for details, see "Bikepath Details No.3" sheets.
3. For Section H-H, see Section F-F of "Bikepath Details No.11" sheet.
4. Silicone caulking shall be provided along all edges of bolted connection between bikepath cantilever beam and box girder.

ALL DIMENSIONS ARE IN MILLIMETERS UNLESS OTHERWISE SHOWN

100% PS&E

SAN FRANCISCO OAKLAND BAY BRIDGE
EAST SPAN SEISMIC SAFETY PROJECT
SELF-ANCHORED SUSPENSION BRIDGE
(SUPERSTRUCTURE & TOWER)

BIKEPATH DETAILS NO. 10

R. Vallizadeh/V. Toan/Y.L./W.L./F.C.
DESIGN OVERSIGHT
SIGN OFF DATE 07/20/07

	BY	CHECKED
DESIGN	T. Ho	T. McMeans
DETAILS	R. Xu	P. Ritchie
QUANTITIES	C. Bernardo	S. Shi

PREPARED FOR THE STATE OF CALIFORNIA DEPARTMENT OF TRANSPORTATION

R. Manzanarez
PROJECT ENGINEER

BRIDGE NO. 34-0006L/R
KILOMETER POST 13.2/13.9

CU 04
EA 0120F1

Rev. Date: 5-18-98

ORIGINAL SCALE IN MILLIMETERS FOR REDUCED PLANS 0 10 20 30 40 50 60 70 80 90 100

DISREGARD PRINTS BEARING EARLIER REVISION DATES 05/27/01 05/06/02 07/07/02 12/18/02 11/13/05

SHEET 417R1 OF

FILE => I:\bb\04-0120I\sas\contract plans and cco\cco\in progress\cco#33\agbwd10.dgn

USERNAME => klo DATE PLOTTED => 19 JUL 2007 TIME PLOTTED => 13:27:40

DIST.	COUNTY	ROUTE	KILOMETER POST TOTAL PROJECT	SHEET NO.	TOTAL SHEETS
04	SF	80	13.2/13.9	835R1	1204

REGISTERED ENGINEER - CIVIL

12-6-04
PLANS APPROVAL DATE

REGISTERED PROFESSIONAL ENGINEER Tien Hung Ho No. C 43990 Exp. 6/30/09 CIVIL STATE OF CALIFORNIA

The State of California or its officers or agents shall not be responsible for the accuracy or completeness of electronic copies of this plan sheet.

T.Y. LIN / MOFFATT & NICHOL
825 BATTERY STREET
SAN FRANCISCO, CA 94111

To get to the web site, go to: http://www.dot.ca.gov

Caltrans Metric

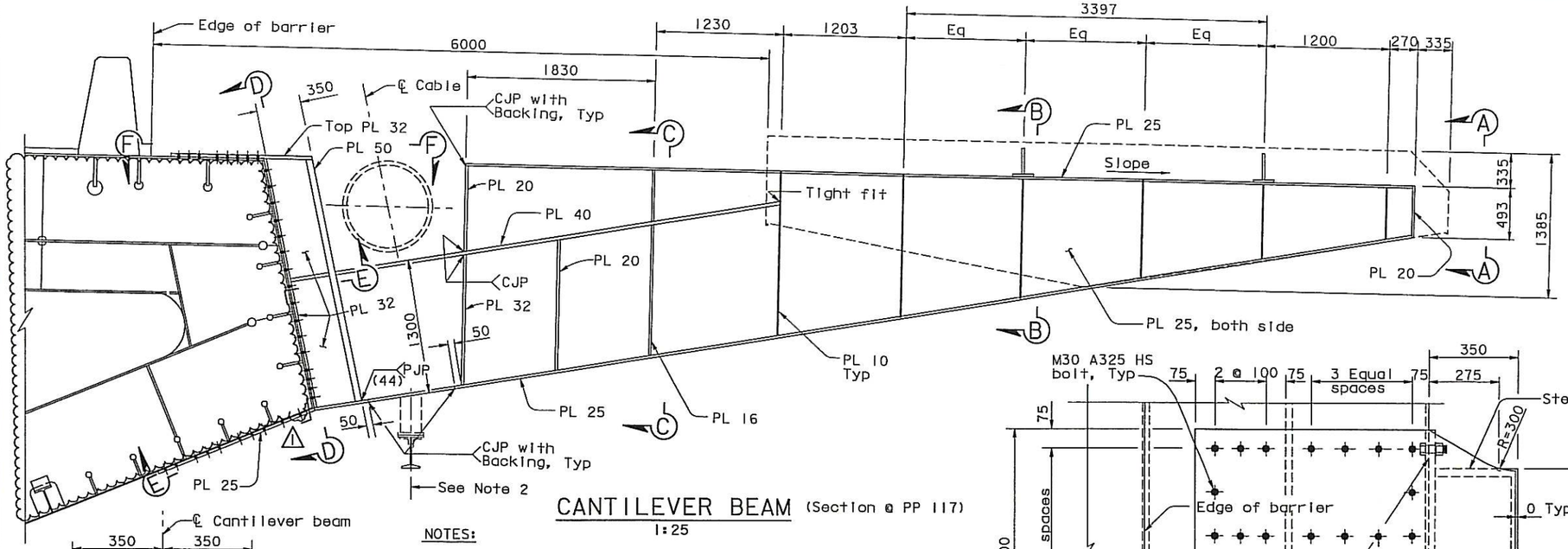

CANTILEVER BEAM (Section @ PP 117)
1:25

NOTES:

1. The cable location shown is based on the information provided in "Suspension Cable Layout" sheets. The Contractor shall verify these locations based on the "as built" cable profile described in "Construction Sequence" sheets. In the event of a conflict, bikepath bracket details may be revised and submitted to the Engineer for review and approval.
2. For location and details of traveler rail support, see "Traveler Rail Details No. 13" sheet.
3. Silicone caulking shall be provided along all edges of bolted connection between bikepath cantilever beam and box girder.

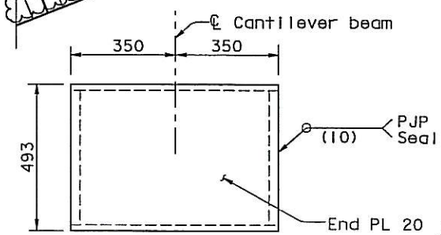

VIEW A-A
1:10

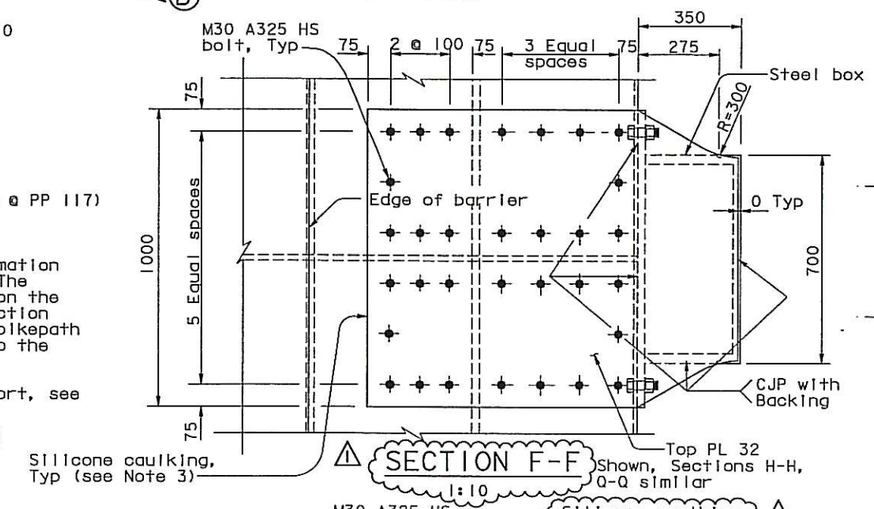

SECTION F-F
1:10

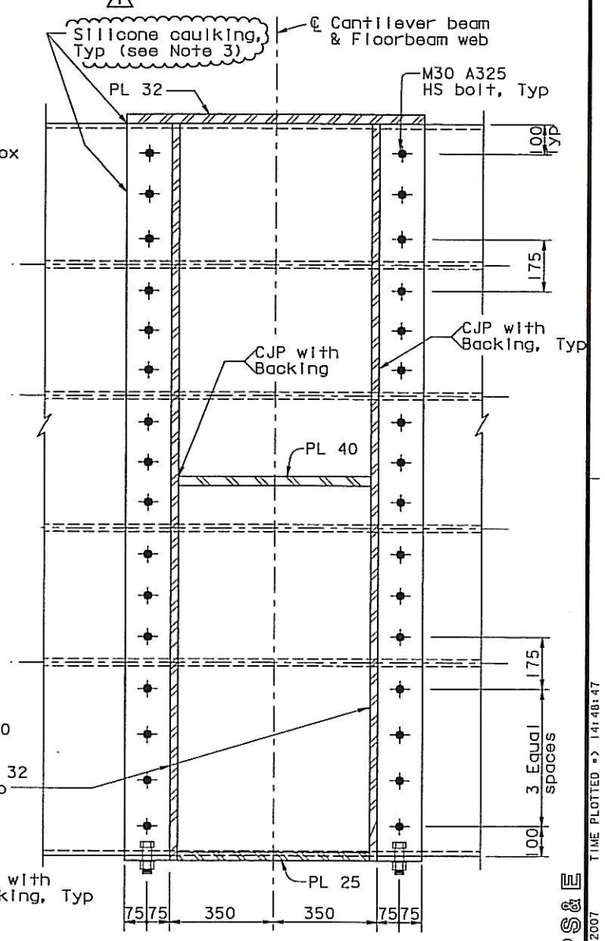

SECTION D-D
1:10

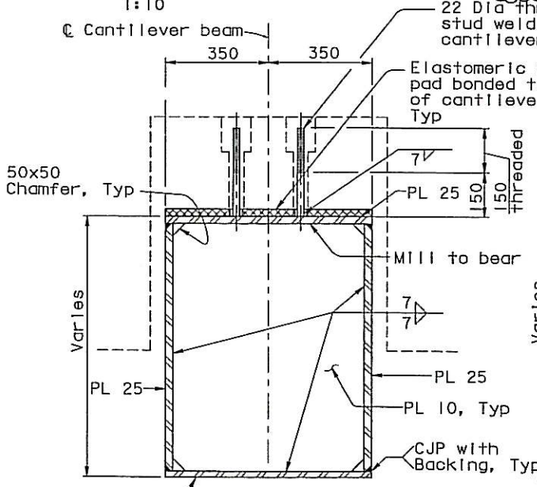

SECTION B-B
1:10

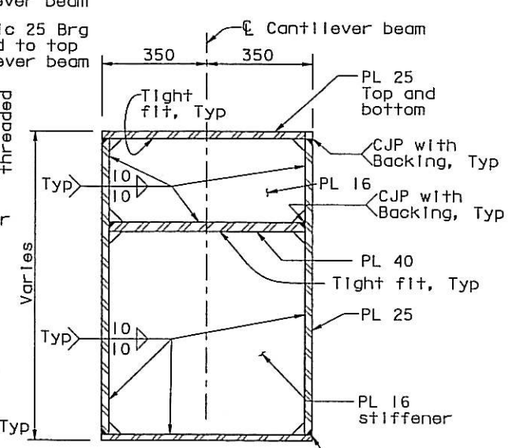

SECTION C-C
NTS

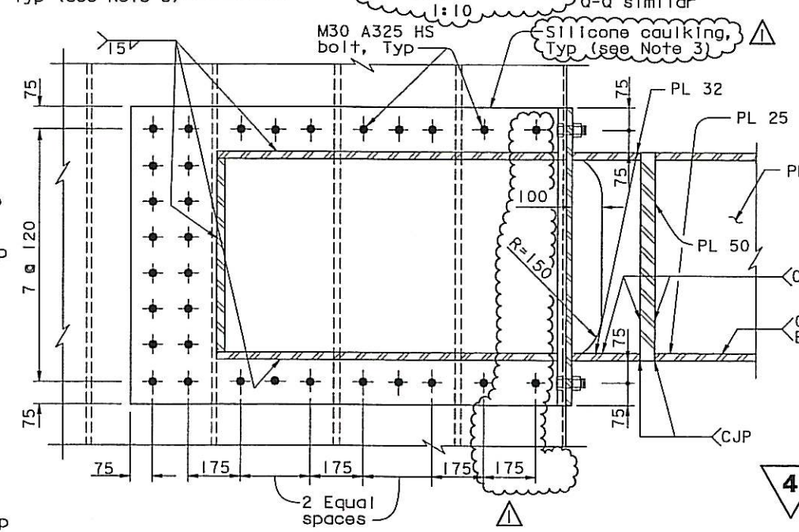

SECTION E-E
1:10

4 **REVISED PER ADDENDUM NO. 4 DATED DECEMBER 9, 2005**

ALL DIMENSIONS ARE IN MILLIMETERS UNLESS OTHERWISE SHOWN

MARK	DATE	DESCRIPTIONS	BY	CH'D	CCO#
4	07/20/07	BIKEPATH BRACKETS	GB	TH	33

REVISIONS

CONTRACT CHANGE ORDER NO. ____
SHEET ____ OF ____

R. Valizadeh/V. Toan/Y.L./W.L./F.C.
DESIGN OVERSIGHT
SIGN OFF DATE 07/20/07
Rev. Date: 5-18-98

DESIGN	BY T. Ho	CHECKED T. McMeans	
DETAILS	BY R. Xu	CHECKED P. Ritchie	
QUANTITIES	BY C. Bernardo	CHECKED S. Shi	

PREPARED FOR THE STATE OF CALIFORNIA DEPARTMENT OF TRANSPORTATION

R. Manzanarez
PROJECT ENGINEER

BRIDGE NO. 34-0006L/R
KILOMETER POST 13.2/13.9

SAN FRANCISCO OAKLAND BAY BRIDGE
EAST SPAN SEISMIC SAFETY PROJECT
SELF-ANCHORED SUSPENSION BRIDGE
(SUPERSTRUCTURE & TOWER)

BIKEPATH DETAILS NO. 11

ORIGINAL SCALE IN MILLIMETERS FOR REDUCED PLANS 0 10 20 30 40 50 60 70 80 90 100

CU 04
EA 0120F1

DISREGARD PRINTS BEARING EARLIER REVISION DATES

REVISION DATES (PRELIMINARY STAGE ONLY) 05/24/01 09/06/02 07/24/02 12/13/02 11/13/03

SHEET 418R1 OF

FILE => I:\bb\04-012001\sas\contract plans and cco\cco\in progress\cco#33\agbwd11.dgn

USERNAME => ptrom DATE PLOTTED => 19 JUL 2007 TIME PLOTTED => 14:48:47

100 % PS&E

DIST.	COUNTY	ROUTE	KILOMETER POST TOTAL PROJECT	SHEET NO.	TOTAL SHEETS
04	SF	80	13.2/13.9	836R1	1204

Caltrans Metric

REGISTERED ENGINEER - CIVIL

12-6-04
PLANS APPROVAL DATE

REGISTERED PROFESSIONAL ENGINEER Tien Hung Ho No. C 43990 Exp. 06/30/09 CIVIL STATE OF CALIFORNIA

The State of California or its officers or agents shall not be responsible for the accuracy or completeness of electronic copies of this plan sheet.

T.Y. LIN / MOFFATT & NICHOL
825 BATTERY STREET
SAN FRANCISCO, CA 94111

To get to the web site, go to: http://www.dot.ca.gov

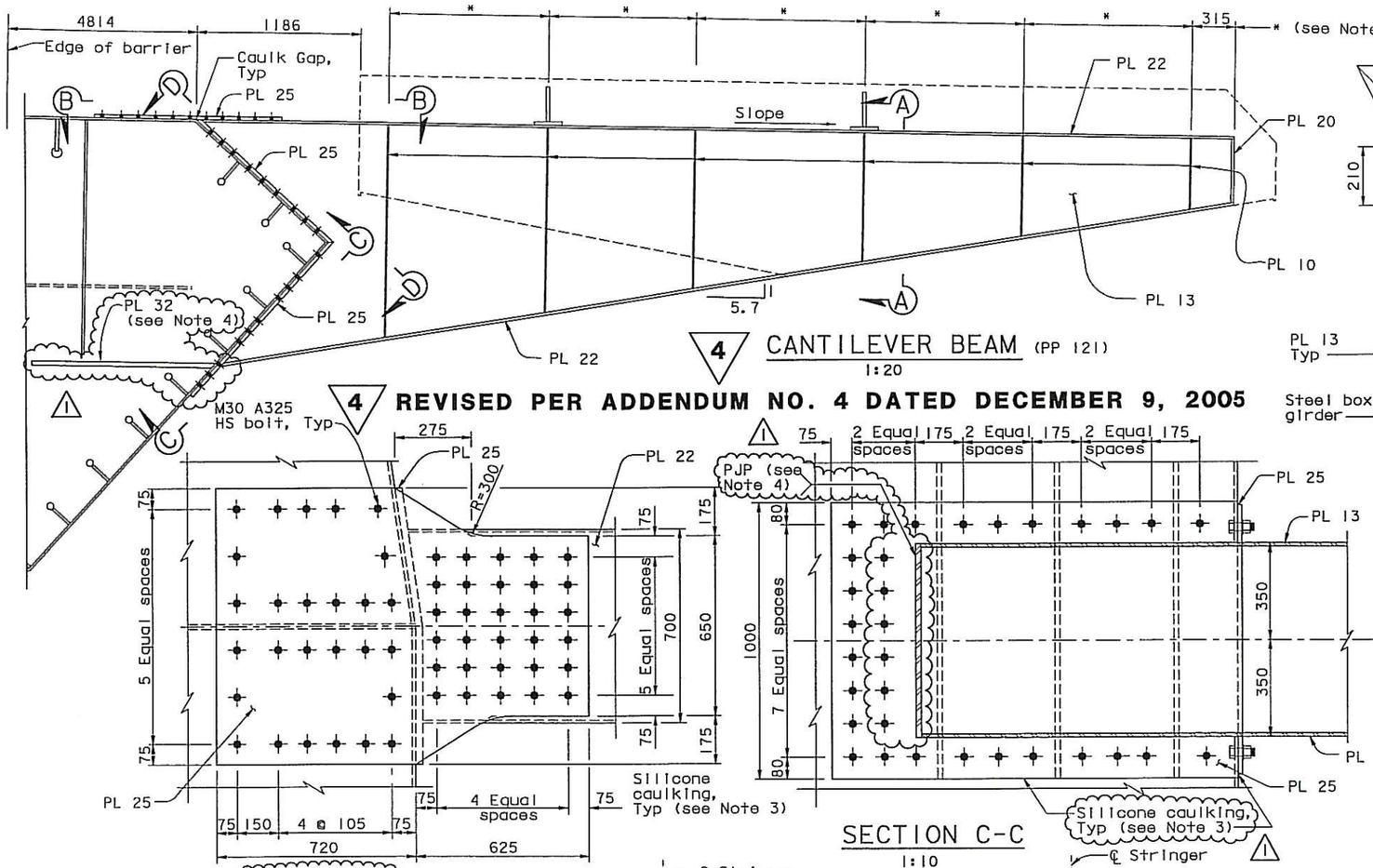

4 CANTILEVER BEAM (PP 121)
1:20

4 REVISED PER ADDENDUM NO. 4 DATED DECEMBER 9, 2005

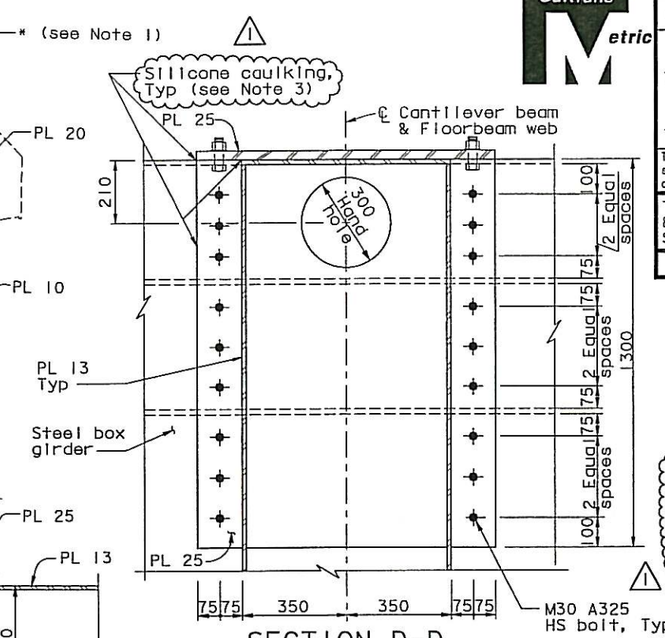

SECTION D-D
1:10

4 REVISED PER ADDENDUM NO. 4 DATED DECEMBER 9, 2005

NOTES:

1. Stiffener plate spacing to match bikepath stringer spacing, see "Bikepath Framing Details No.5" sheet.
2. For call box support locations and details, see "Road Plans".
3. Silicone caulking shall be provided along all edges of bolted connection between bikepath cantilever beam and box girder.
4. For bikepath bracket stiffener, see Note 6 on "Floorbeam At East Transition No.4" sheet.

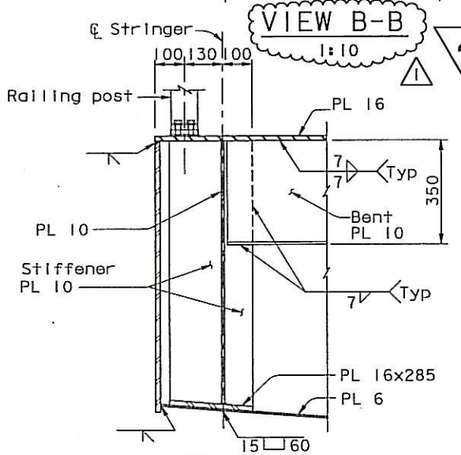

DETAIL E
1:10

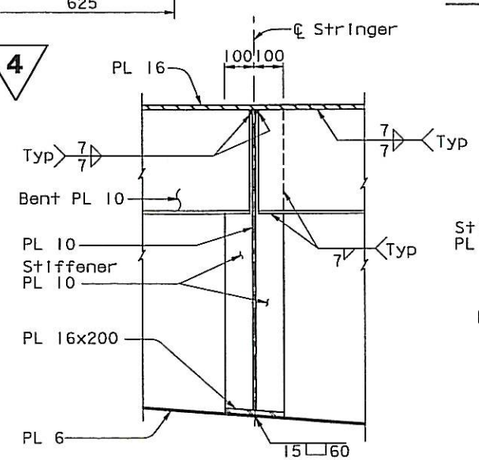

DETAIL F
1:10

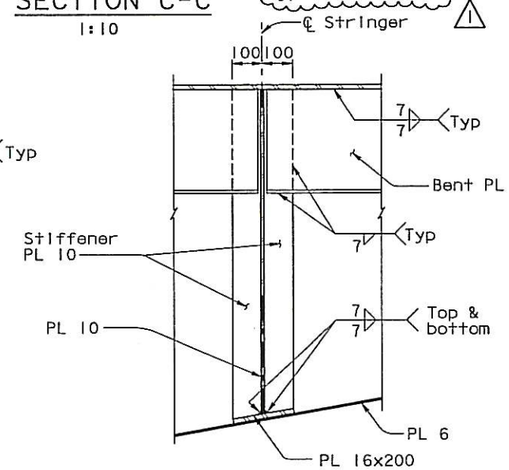

DETAIL G
1:10

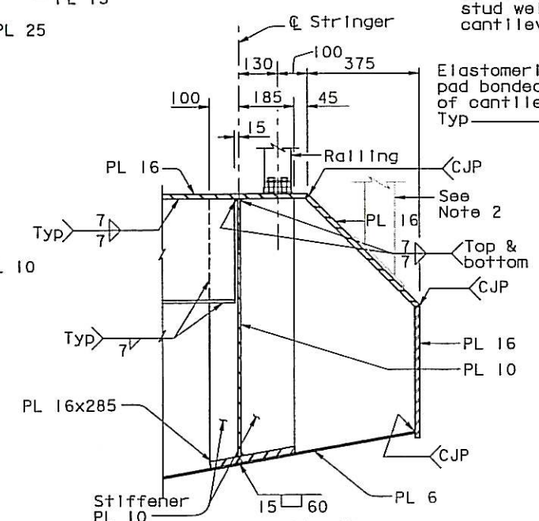

DETAIL H
1:10

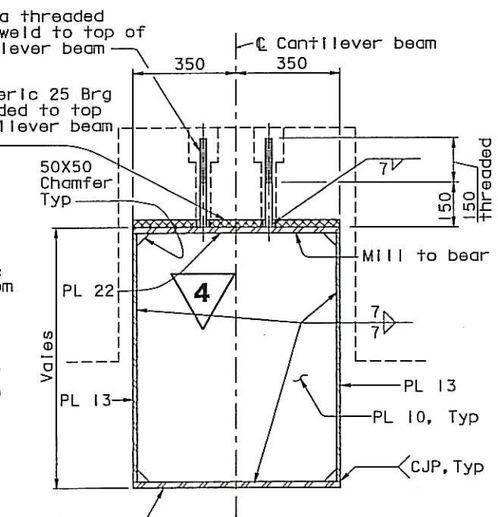

SECTION A-A
1:10

ALL DIMENSIONS ARE IN MILLIMETERS UNLESS OTHERWISE SHOWN

MARK	DATE	DESCRIPTIONS	BY	CH'D	CCO#
1	07/20/07	BIKEPATH BRACKETS	GB	TH	33

REVISIONS

R. Valizadeh/V. Toan/Y.L./W.L./F.C.
DESIGN OVERSIGHT
SIGN OFF DATE 07/20/07

Rev. Date: 5-18-98

CONTRACT CHANGE ORDER NO.____
SHEET ____ OF ____

DESIGN	BY T. Ho	CHECKED T. McMeans	
DETAILS	BY R. Xu	CHECKED P. Ritchie	
QUANTITIES	BY C. Bernardo	CHECKED S. Shi	

ORIGINAL SCALE IN MILLIMETERS FOR REDUCED PLANS 0 10 20 30 40 50 60 70 80 90 100

PREPARED FOR THE STATE OF CALIFORNIA DEPARTMENT OF TRANSPORTATION

R. Manzanarez
PROJECT ENGINEER

CU 04
EA 0120F1

BRIDGE NO. 34-0006L/R
KILOMETER POST 13.2/13.9

DISREGARD PRINTS BEARING EARLIER REVISION DATES

SAN FRANCISCO OAKLAND BAY BRIDGE
EAST SPAN SEISMIC SAFETY PROJECT
SELF-ANCHORED SUSPENSION BRIDGE
(SUPERSTRUCTURE & TOWER)

BIKEPATH DETAILS NO. 12

REVISION DATES (PRELIMINARY STAGE ONLY) 05/31/01 01/08/02 01/30/02 12/13/02 11/13/03

SHEET 419R1 OF

FILE => I:\bb\04-012001\sas\contract plans and cco\cco\in progress\cco#33\agbwd12.dgn

USERNAME => klo DATE PLOTTED => 19 JUL 2007 TIME PLOTTED => 13:29:08

100% PS&E

DIST.	COUNTY	ROUTE	KILOMETER POST TOTAL PROJECT	SHEET NO.	TOTAL SHEETS
04	SF	80	13.2/13.9	837R1	1204

4 Caltrans Metric

REGISTERED ENGINEER - CIVIL

12-6-04
PLANS APPROVAL DATE

REGISTERED PROFESSIONAL ENGINEER — Tien Hung Ho, No. C 43990, Exp. 06/30/09, CIVIL, STATE OF CALIFORNIA

The State of California or its officers or agents shall not be responsible for the accuracy or completeness of electronic copies of this plan sheet.

T.Y. LIN / MOFFATT & NICHOL
825 BATTERY STREET
SAN FRANCISCO, CA 94111

To get to the web site, go to: http://www.dot.ca.gov

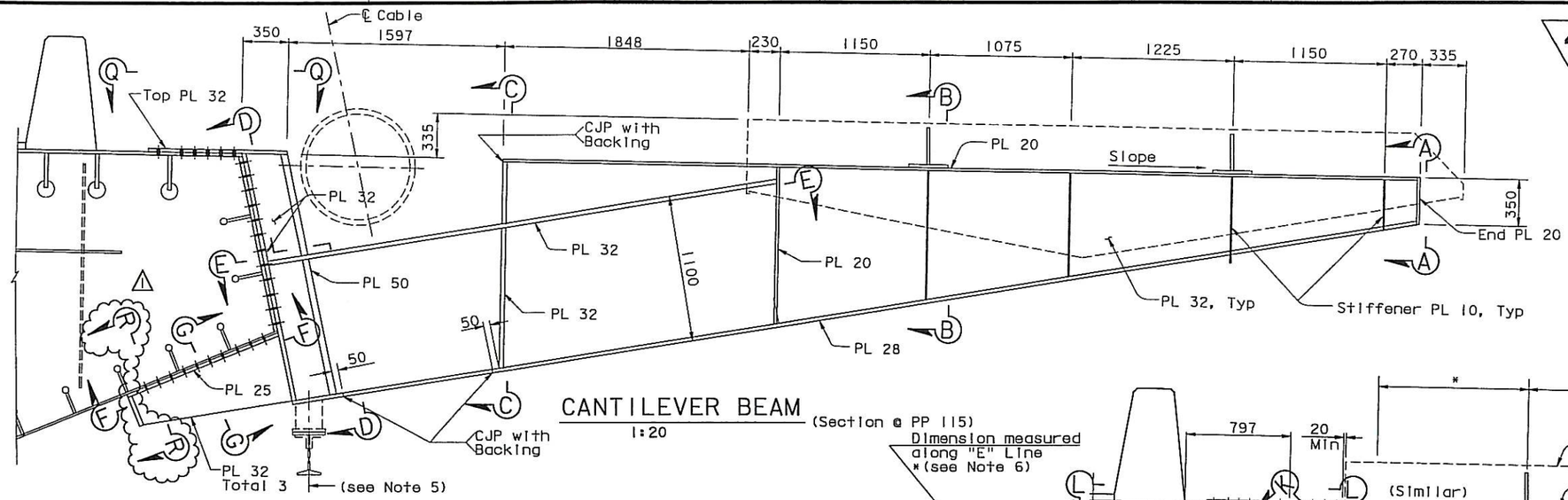

CANTILEVER BEAM (Section @ PP 115)
1:20

Dimension measured along "E" Line
*(see Note 6)

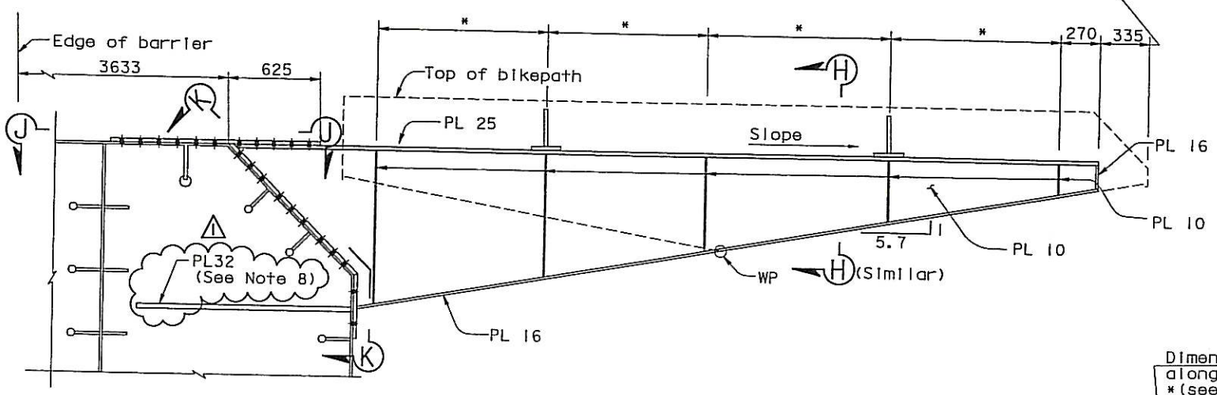

CANTILEVER BEAM (PP123)
1:20

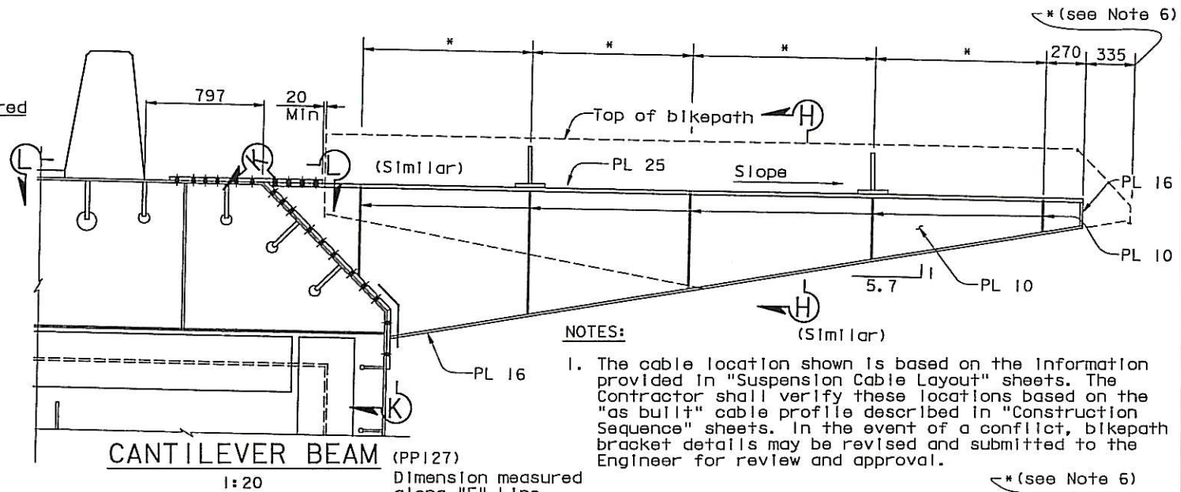

CANTILEVER BEAM (PP127)
1:20

Dimension measured along "E" Line

NOTES:

1. The cable location shown is based on the information provided in "Suspension Cable Layout" sheets. The Contractor shall verify these locations based on the "as built" cable profile described in "Construction Sequence" sheets. In the event of a conflict, bikepath bracket details may be revised and submitted to the Engineer for review and approval.

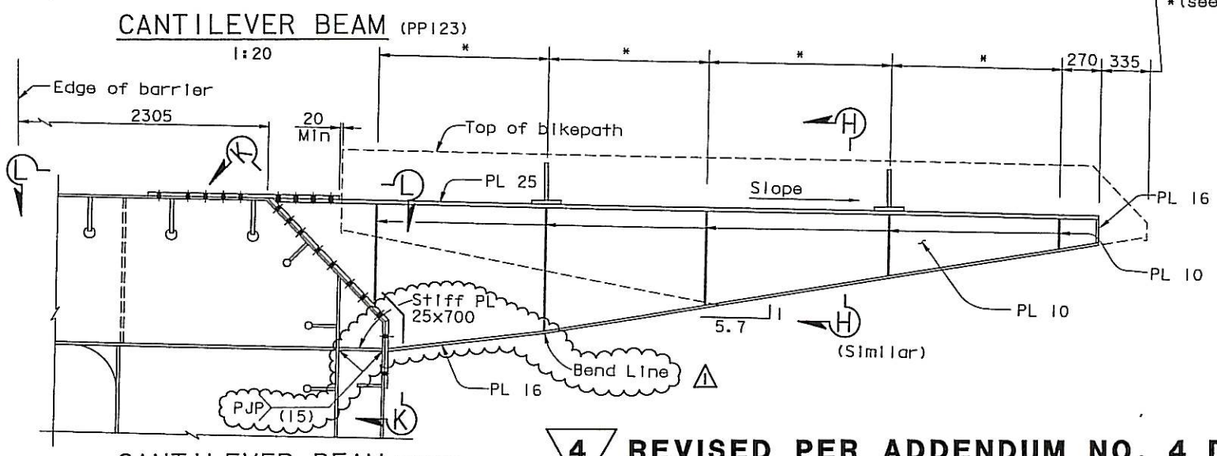

CANTILEVER BEAM (PP125)
1:20

Dimension measured along "E" Line
*(see Note 6)

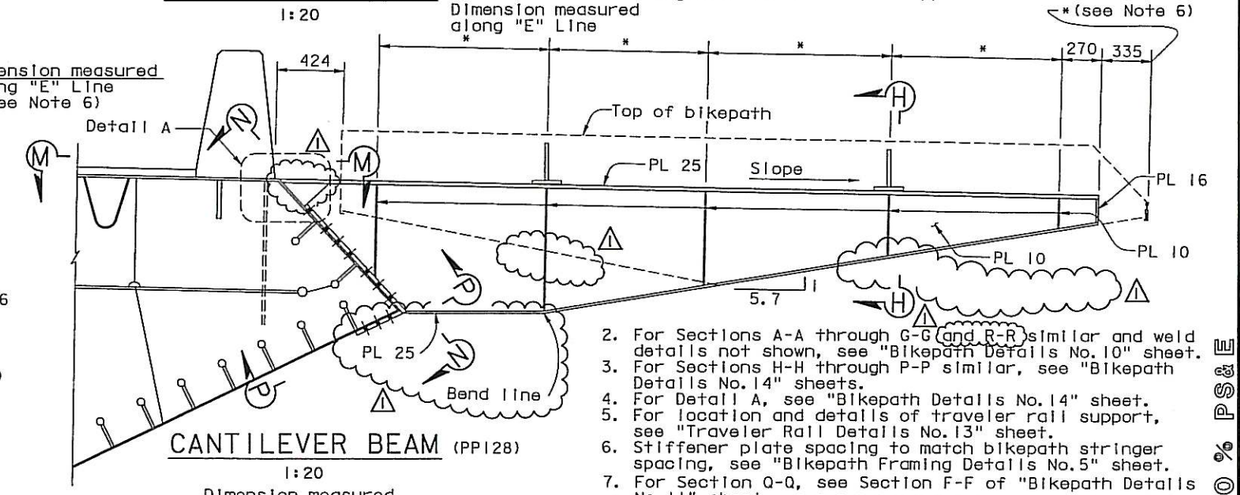

CANTILEVER BEAM (PP128)
1:20

Dimension measured along "E" Line

2. For Sections A-A through G-G (and R-R) similar and weld details not shown, see "Bikepath Details No. 10" sheet.
3. For Sections H-H through P-P similar, see "Bikepath Details No. 14" sheets.
4. For Detail A, see "Bikepath Details No. 14" sheet.
5. For location and details of traveler rail support, see "Traveler Rail Details No. 13" sheet.
6. Stiffener plate spacing to match bikepath stringer spacing, see "Bikepath Framing Details No. 5" sheet.
7. For Section Q-Q, see Section F-F of "Bikepath Details No. 11" sheet.
8. For bikepath bracket stiffener, see Note 6 on "Floorbeam At East Transition No. 5" sheet.

4 REVISED PER ADDENDUM NO. 4 DATED DECEMBER 9, 2005

ALL DIMENSIONS ARE IN MILLIMETERS UNLESS OTHERWISE SHOWN

R. Valizadeh/V. Toan/Y.L./W.L./F.C.
DESIGN OVERSIGHT
SIGN OFF DATE 07/20/07
Rev. Date: 5-18-98

MARK	DATE	DESCRIPTIONS	BY	CH'D	CCO#
1	07/20/07	BIKEPATH BRACKETS	GB	TH	33

REVISIONS

CONTRACT CHANGE ORDER NO. ____
SHEET ____ OF ____

DESIGN	BY T. Ho	CHECKED T. McMeans	
DETAILS	BY R. Xu	CHECKED P. Ritchie	
QUANTITIES	BY C. Bernardo	CHECKED S. Shi	

PREPARED FOR THE STATE OF CALIFORNIA DEPARTMENT OF TRANSPORTATION

R. Manzanarez
PROJECT ENGINEER

BRIDGE NO. 34-0006L/R
KILOMETER POST 13.2/13.9

SAN FRANCISCO OAKLAND BAY BRIDGE
EAST SPAN SEISMIC SAFETY PROJECT
SELF-ANCHORED SUSPENSION BRIDGE
(SUPERSTRUCTURE & TOWER)

BIKEPATH DETAILS NO. 13

ORIGINAL SCALE IN MILLIMETERS FOR REDUCED PLANS 0 10 20 30 40 50 60 70 80 90 100

CU 04
EA 0120F1

DISREGARD PRINTS BEARING EARLIER REVISION DATES → 05/31/01 01/25/02 07/25/02 12/13/02 11/13/03

REVISION DATES (PRELIMINARY STAGE ONLY)

SHEET 420R1 OF

FILE => I:\bb\04-012001\sas\contract plans and cco\cco\in progress\cco#33\agbwd13.dgn

USERNAME => klo DATE PLOTTED => 19 JUL 2007 TIME PLOTTED => 13:30:19

100 % PS&E

DIST.	COUNTY	ROUTE	KILOMETER POST TOTAL PROJECT	SHEET NO.	TOTAL SHEETS
04	SF	80	13.2/13.9	838R1	1204

Caltrans Metric

REGISTERED ENGINEER - CIVIL

12-6-04

PLANS APPROVAL DATE

The State of California or its officers or agents shall not be responsible for the accuracy or completeness of electronic copies of this plan sheet.

REGISTERED PROFESSIONAL ENGINEER Tien Hung Ho No. C 43990 Exp. 6/30/09 CIVIL STATE OF CALIFORNIA

T.Y. LIN / MOFFATT & NICHOL
825 BATTERY STREET
SAN FRANCISCO, CA 94111

To get to the web site, go to: http://www.dot.ca.gov

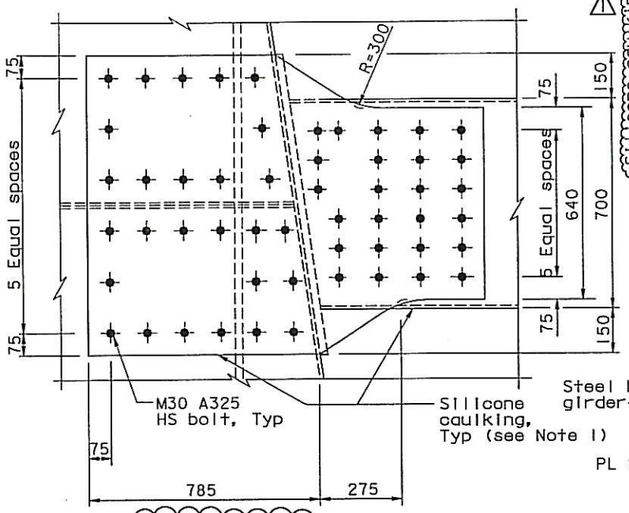

4 VIEW J-J 1:10

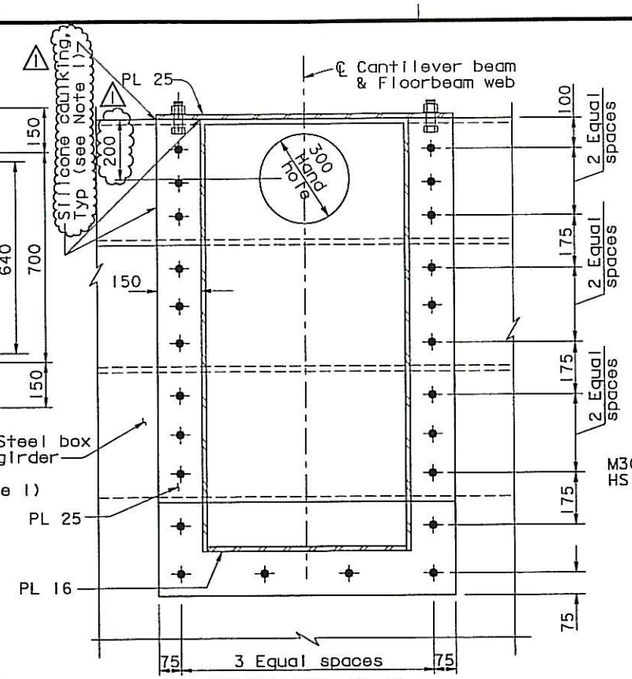

4 SECTION K-K 1:10

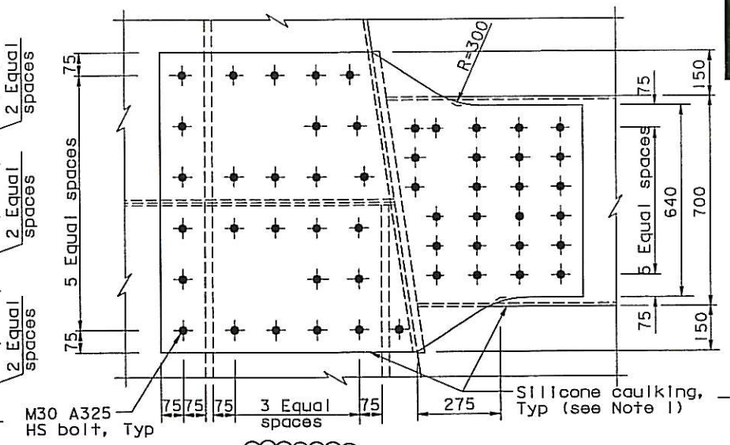

4 VIEW L-L 1:10

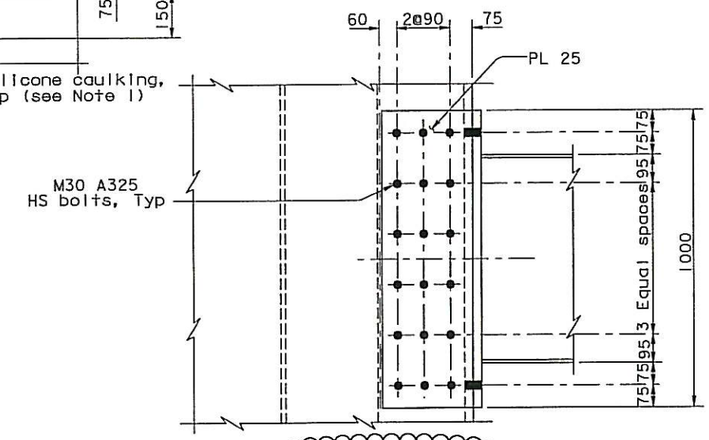

SECTION P-P 1:10

MARK	DATE	DESCRIPTIONS	BY	CH'D	CCO#
1	07/20/07	BIKEPATH BRACKETS	GB	TH	33

REVISIONS

CONTRACT CHANGE ORDER NO. ____
SHEET ____ OF ____

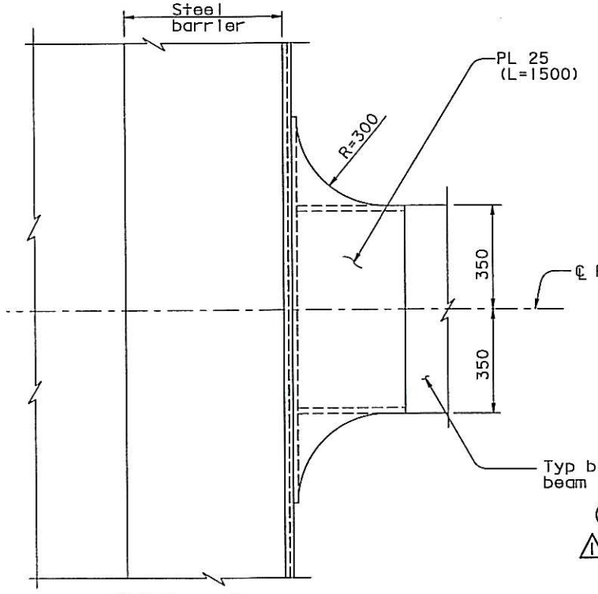

4 VIEW M-M 1:10

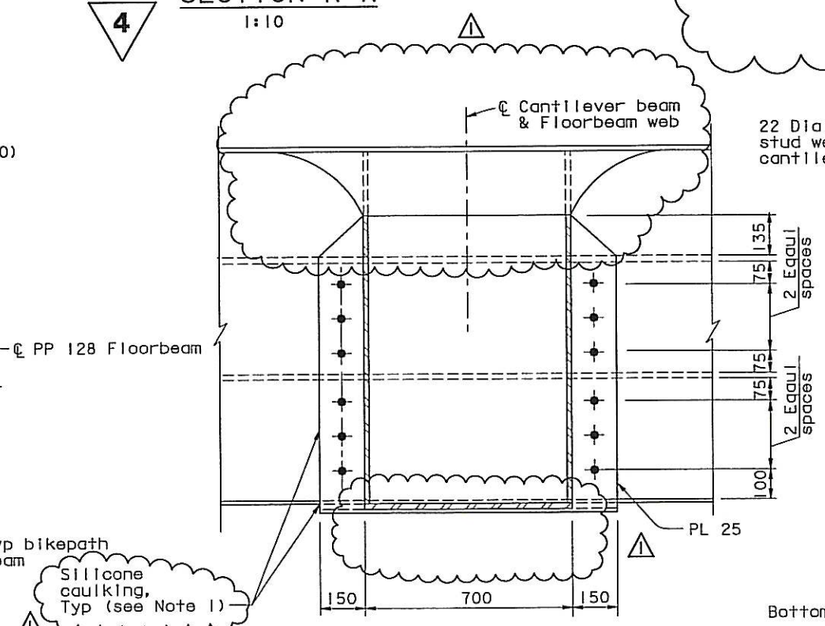

SECTION N-N 1:10

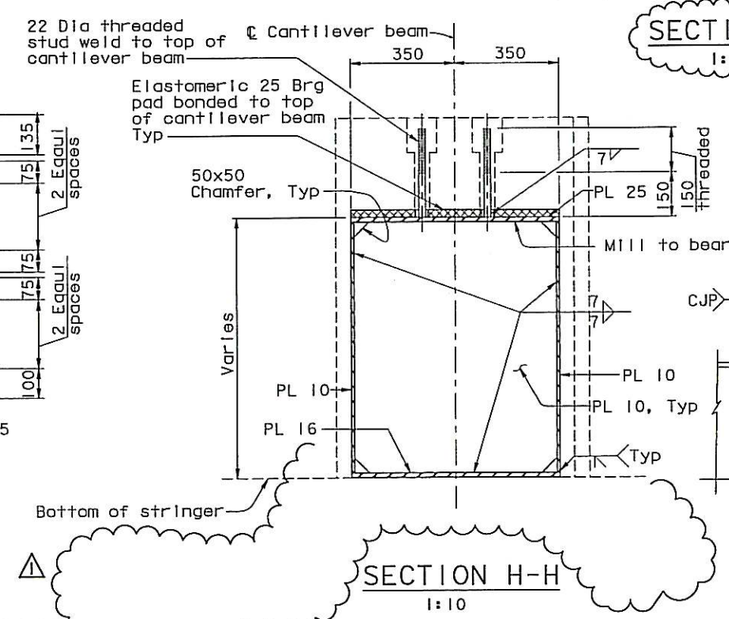

SECTION H-H 1:10

NOTES:

1. Silicone caulking shall be provided along all edges of bolted connection between bikepath cantilever beam and box girder.

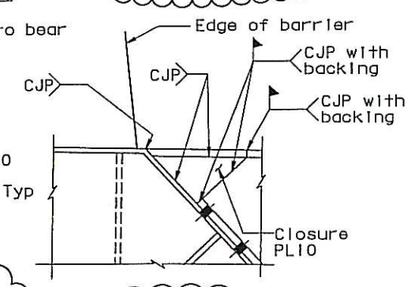

DETAIL A 1:5

4 REVISED PER ADDENDUM NO. 4 DATED DECEMBER 9, 2005

ALL DIMENSIONS ARE IN MILLIMETERS UNLESS OTHERWISE SHOWN

SAN FRANCISCO OAKLAND BAY BRIDGE
EAST SPAN SEISMIC SAFETY PROJECT
SELF-ANCHORED SUSPENSION BRIDGE
(SUPERSTRUCTURE & TOWER)

BIKEPATH DETAILS NO. 14

R. Valizadeh/V. Toan/Y.L./W.L./F.C.
DESIGN OVERSIGHT
Roger Valizadeh / Vong Toan / Y. Liu
SIGN OFF DATE 07/20/07

	BY	CHECKED
DESIGN	T. Ho	T. McMeans
DETAILS	R. Xu	P. Ritchie
QUANTITIES	C. Bernardo	S. Shi

PREPARED FOR THE STATE OF CALIFORNIA DEPARTMENT OF TRANSPORTATION

R. Manzanarez
PROJECT ENGINEER

BRIDGE NO. 34-0006L/R
KILOMETER POST 13.2/13.9

Rev. Date: 5-18-98

ORIGINAL SCALE IN MILLIMETERS FOR REDUCED PLANS 0 10 20 30 40 50 60 70 80 90 100

CU 04
EA 0120F1

DISREGARD PRINTS BEARING EARLIER REVISION DATES

REVISION DATES (PRELIMINARY STAGE ONLY) 05/31/01 04/08/02 07/01/02 12/19/02 11/13/05

SHEET 421R1 OF

FILE => I:\bb\04-012001\sas\contract plans and cco\cco\in progress\cco#33\agbwd14.dgn

100 % PS&E

DATE PLOTTED => 19 JUL 2007 TIME PLOTTED => 13:31:52

USERNAME => kio