STATE OF CALIFORNIA - DEPARTMENT OF TRANSPORTATION

CONTRACT CHANGE ORDER

Change Requested by: Engineer

CCO: 33 **Suppl. No. 0** **Contract No. 04 – 0120F4** **Road** SF-80-13.2/13.9 **FED. AID LOC.:**

To: **AMERICAN BRIDGE/FLUOR ENTERPRISES INC A JOINT VENTURE**

You are directed to make the following changes from the plans and specifications or do the following described work not included in the plans and specifications for this contract. ***NOTE: This change order is not effective until approved by the Engineer.***

Description of work to be done, estimate of quantities and prices to be paid. (Segregate between additional work at contract price, agreed price and force account.) Unless otherwise stated, rates for rental of equipment cover only such time as equipment is actually used and no allowance will be made for idle time. This last percentage shown is the net accumulated increase or decrease from the original quantity in the Engineer's Estimate.

Adjustment of Compensation at Lump Sum Price:

ITEM 1.

Modify the brackets for attaching the bikepath to the Eastbound Orthotropic Box Girder (OBG) as shown on sheets two (2) through eight (8) of this change order.

The following revised contract plan sheets detail all changes: Plan Sheet Nos. 825R1, 833R1, 834R1, 835R1, 836R1, 837R1 and 838R1 (of 1204).

This change order resolves Contractor Request For Information (RFI) Nos. 164R0, 368R1, 372R0 and 741R0 with respect to changes listed above.

For this work, the Contractor will be paid the sum of $150,000.00. This sum constitutes full compensation, including all markups, for this change.

Adjustment of Compensation at Lump Sum Price.....$150,000.00

ITEM 2.

The items identified above in this change order have been paid as part of CCO 108 resolution. Therefore, the amount due under this change order will be adjusted by the amount paid under CCO 108 to prevent a double payment. Total amount paid under CCO 108, and to be credited to this change, is $150,000.00.

Adjustment of Compensation at Lump Sum Price.....<$150,000.00>

CHANGE ORDER COST AND TIME SUMMARY

(ITEM 1) Adjustment of Compensation for work pursuant to this change order	$150,000.00
(ITEM 2) Amount paid under CCO 108 for this change order	<$150,000.00>
Total net pay for this change order	$0.00

Contract time is addressed in CCO 108 for all work identified in this change order. Therefore, contract time will not be adjusted in this change order.

Estimated Cost: **Increase** ☐ **Decrease** ☐ **$0.00**

By reason of this order the time of completion will be adjusted as follows: 0 days

Submitted by

Signature [signature] **Resident Engineer** Brian Boal for Gary Pursell, Sup.T.E. **Date** 2/2/2010

Approval Recommended by

Signature [signature] **Supervising Transportation Engineer** Gary Pursell, Sup.T.E. **Date** 2/2/10

Engineer Approval by

Signature [signature] **Supervising Transportation Engineer** Gary Pursell, Sup.T.E. **Date** 2/23/10

We the undersigned contractor, have given careful consideration to the change proposed and agree, if this proposal is approved, that we will provide all equipment, furnish the materials, except as otherwise be noted above, and perform all services necessary for the work above specified, and will accept as full payment therefor the prices shown above.

NOTE: If you, the contractor, do not sign acceptance of this order, your attention is directed to the requirements of the specifications as to proceeding with the ordered work and filing a written protest within the time therein specified.

Contractor Acceptance by

Signature [signature] (Print name and title) Michael D. Flowers Project Director **Date** 2-22-10

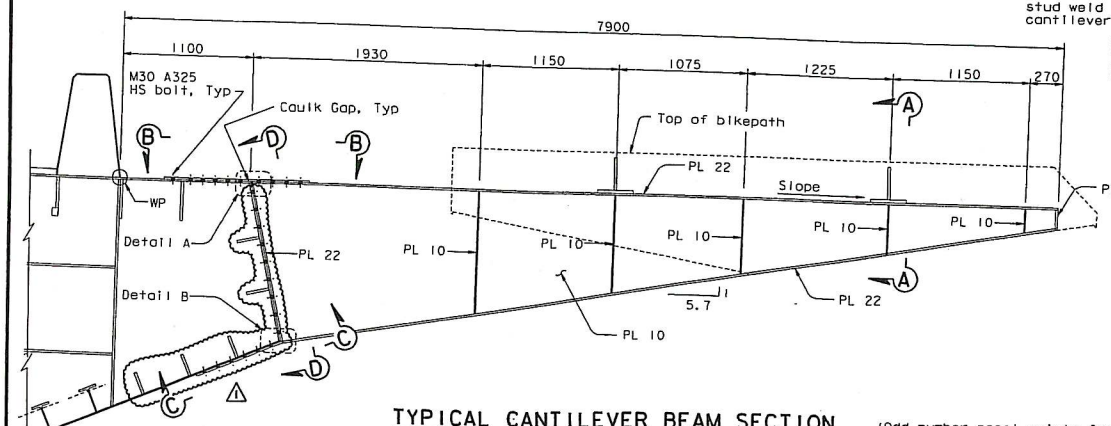

TYPICAL CANTILEVER BEAM SECTION
1:20

(Odd number panel points from PP13 to PP111)

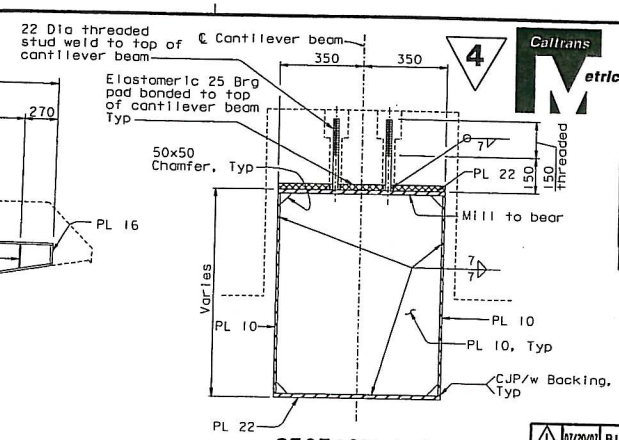

SECTION A-A
1:10

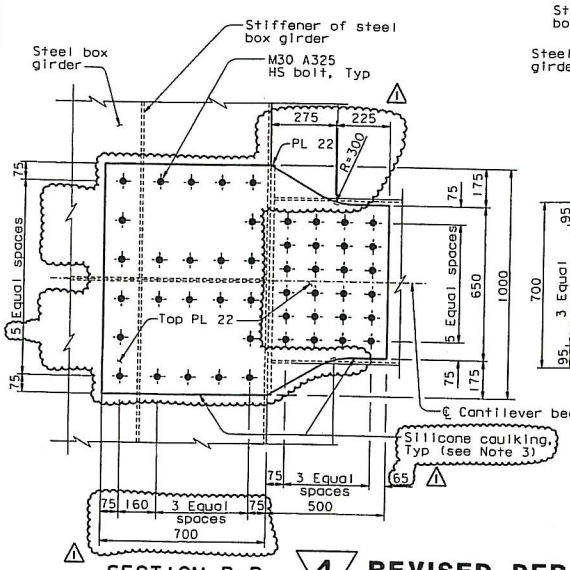

SECTION B-B
1:10

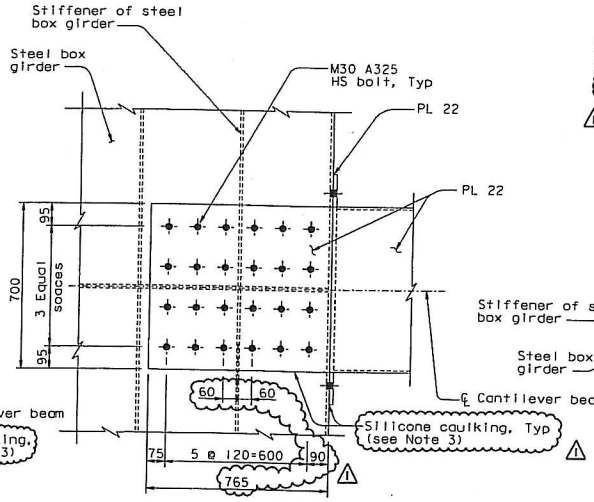

SECTION C-C
1:10

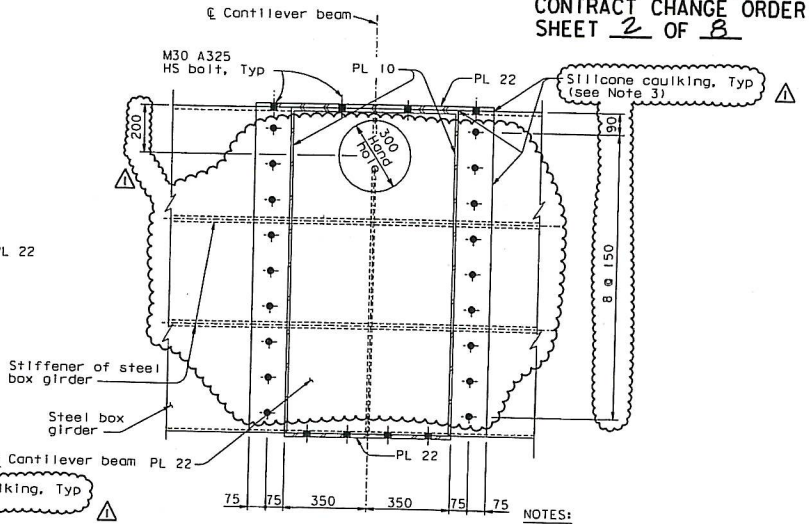

SECTION D-D
1:10

NOTES:

1. For location of typical cantilever beam, see "Bikepath Layout" sheets.
2. For Details A and B, see "Suspender Bracket Details No. 2" sheet.
3. Silicone caulking shall be provided along all edges of bolted connection between bikepath cantilever beam and box girder.

4 REVISED PER ADDENDUM NO. 4 DATED DECEMBER 9, 2005

ALL DIMENSIONS ARE IN MILLIMETERS UNLESS OTHERWISE SHOWN

DIST.	COUNTY	ROUTE	KILOMETER POST TOTAL PROJECT	SHEET NO.	TOTAL SHEETS
04	SF	80	13.2/13.9	825R1	1204

Caltrans Metric

REGISTERED ENGINEER - CIVIL
12-6-04
PLANS APPROVAL DATE
The State of California or its officers or agents shall not be responsible for the accuracy or completeness of electronic copies of this plan sheet.

REGISTERED PROFESSIONAL ENGINEER Tien Hung Ho No. C 43990 Exp. 6/30/09 CIVIL STATE OF CALIFORNIA

T.Y. LIN / MOFFATT & NICHOL
825 BATTERY STREET
SAN FRANCISCO, CA 94111

Caltrans now has a web site! To get to the web site, go to: http://www.dot.ca.gov

MARK	DATE	DESCRIPTIONS	BY	CH'D	CCO#
1	07/20/07	BIKEPATH BRACKETS	GB	TH	33

REVISIONS

CONTRACT CHANGE ORDER NO. 33
SHEET 2 OF 8

R. Valizadeh/V. Toan/Y.L./W.L./F.C.
DESIGN OVERSIGHT
SIGN OFF DATE 07/20/07
Rev. Date: 5-18-98

DESIGN	BY T. Ho	CHECKED T. McMeans	
DETAILS	BY R. Xu	CHECKED P. Ritchie	
QUANTITIES	BY C. Bernardo	CHECKED S. Shi	

PREPARED FOR THE STATE OF CALIFORNIA DEPARTMENT OF TRANSPORTATION

R. Manzanarez
PROJECT ENGINEER

BRIDGE NO. 34-0006L/R
KILOMETER POST 13.2/13.9

SAN FRANCISCO OAKLAND BAY BRIDGE
EAST SPAN SEISMIC SAFETY PROJECT
SELF-ANCHORED SUSPENSION BRIDGE
(SUPERSTRUCTURE & TOWER)

BIKEPATH DETAILS NO. 1

ORIGINAL SCALE IN MILLIMETERS FOR REDUCED PLANS 0 10 20 30 40 50 60 70 80 90 100

CU 04
EA 0120F1

DISREGARD PRINTS BEARING EARLIER REVISION DATES

REVISION DATES (PRELIMINARY STAGE ONLY)

SHEET 408R1 OF

FILE => I:\bb\04-012001\sas\contract plans and cco\cco\in progress\cco#33\agbwd01.dgn

USERNAME => vignatovs DATE PLOTTED => 25 JUL 2007 TIME PLOTTED => 12:06:26

100 % PS&E

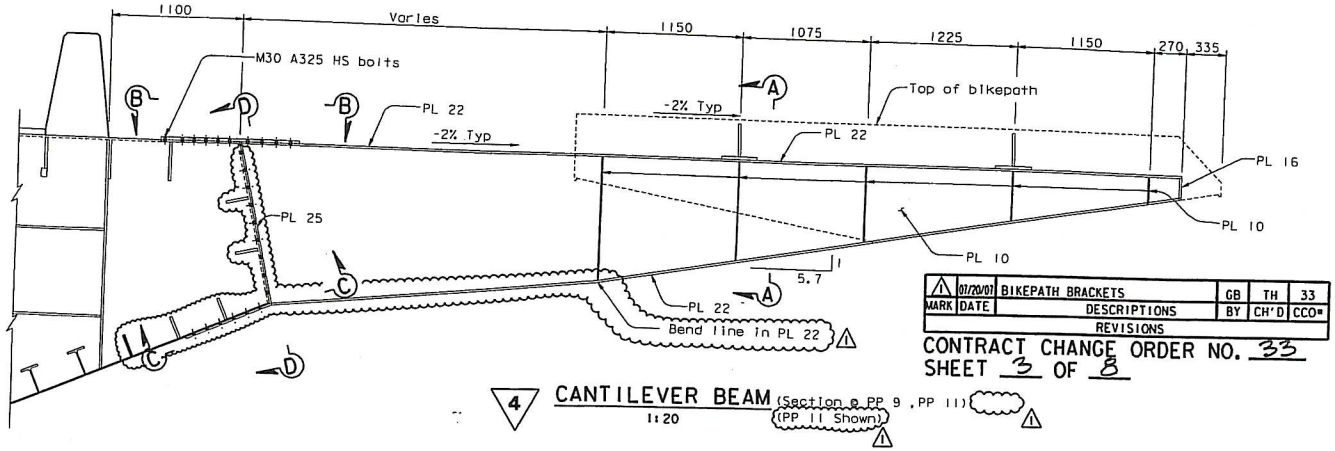

4 CANTILEVER BEAM (Section e PP 9 , PP 11) (PP 11 Shown)
1:20

MARK	DATE	DESCRIPTIONS	BY	CH'D	CCO#
1	07/20/07	BIKEPATH BRACKETS	GB	TH	33
		REVISIONS			

CONTRACT CHANGE ORDER NO. 33
SHEET 3 OF 8

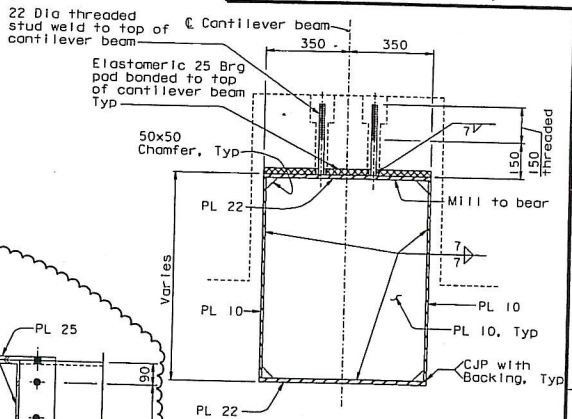

4 SECTION A-A
1:10

4 REVISED PER ADDENDUM NO. 4 DATED DECEMBER 9, 2005

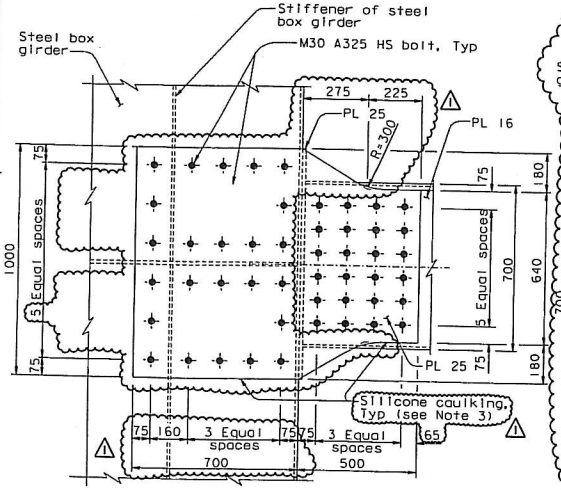

4 SECTION B-B
1:10

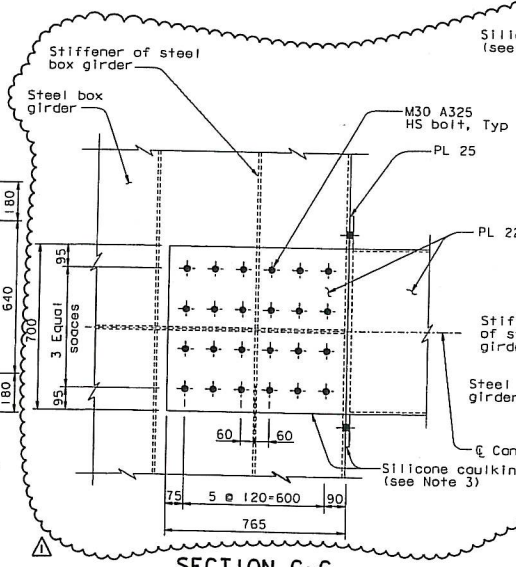

SECTION C-C
1:10

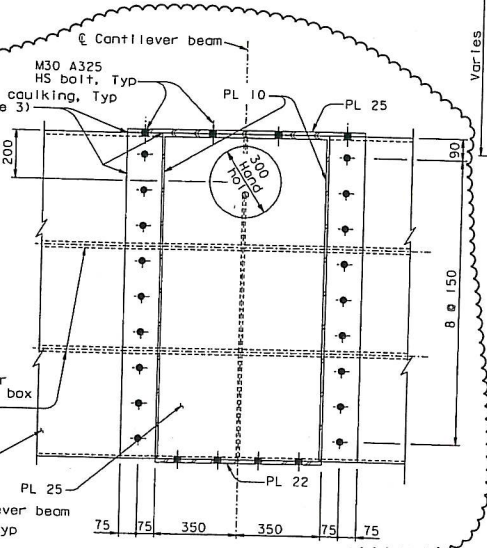

4 SECTION D-D
1:10

NOTES:
1. Bikepath deck similar to typical bikepath deck. For details, see "Bikepath Details No.3" sheet.
2. For details not shown, see "Bikepath Details No.1" sheet.
3. Silicone caulking shall be provided along edges of bolted connection between bikepath cantilever beam and box girder.

ALL DIMENSIONS ARE IN MILLIMETERS UNLESS OTHERWISE SHOWN

DIST.	COUNTY	ROUTE	KILOMETER POST TOTAL PROJECT	SHEET NO.	TOTAL SHEETS
04	SF	80	13.2/13.9	833R	1204

REGISTERED ENGINEER - CIVIL
Tien Hung Ho No. C 43990 Exp. 6/30/09 CIVIL
12-6-04
PLANS APPROVAL DATE
The State of California or its officers or agents shall not be responsible for the accuracy or completeness of electronic copies of this plan sheet.

T.Y. LIN / MOFFATT & NICHOL
825 BATTERY STREET
SAN FRANCISCO, CA 94111

To get to the web site, go to: http://www.dot.ca.gov

R. Vallizadeh/V. Toan/Y.L./W.L./F.C.
DESIGN OVERSIGHT
SIGN OFF DATE 07/20/07
Rev. Date: 5-18-98

	BY	CHECKED
DESIGN	T. Ho	T. McMeans
DETAILS	R. Xu	P. Ritchie
QUANTITIES	C. Bernardo	S. Shi

PREPARED FOR THE STATE OF CALIFORNIA DEPARTMENT OF TRANSPORTATION

R. Manzanarez
PROJECT ENGINEER

ORIGINAL SCALE IN MILLIMETERS FOR REDUCED PLANS 0 10 20 30 40 50 60 70 80 90 100

CU 04
EA 0120F1

DISREGARD PRINTS BEARING EARLIER REVISION DATES

BRIDGE NO.	34-0006L/R
KILOMETER POST	13.2/13.9

SAN FRANCISCO OAKLAND BAY BRIDGE
EAST SPAN SEISMIC SAFETY PROJECT
SELF-ANCHORED SUSPENSION BRIDGE (SUPERSTRUCTURE & TOWER)

BIKEPATH DETAILS NO. 9

REVISION DATES (PRELIMINARY STAGE ONLY)

SHEET 416R OF

FILE => L:\BB\04-012001\SAS\Contract Plans and CCO\CCO\In Progress\CCO#33\ogbwd09.dgn

USERNAME => vignatovsky DATE PLOTTED => 25 JUL 2007 TIME PLOTTED => 12:00:54

100 % PS&E

4 REVISED PER ADDENDUM NO. 4 DATED DECEMBER 9, 2005

DIST.	COUNTY	ROUTE	KILOMETER POST TOTAL PROJECT	SHEET NO.	TOTAL SHEETS
04	SF	80	13.2/13.9	834R1	1204

MARK	DATE	REVISIONS	BY	CH'D	CCO#
1	01/20/01	BIKEPATH BRACKETS	GB	TH	33

CONTRACT CHANGE ORDER NO. 33
SHEET 4 OF 8

REGISTERED ENGINEER - CIVIL
Tien Hung Ho, No. C 43990, Exp. 6/30/09, CIVIL, REGISTERED PROFESSIONAL ENGINEER, STATE OF CALIFORNIA
12-6-04
PLANS APPROVAL DATE
The State of California or its officers or agents shall not be responsible for the accuracy or completeness of electronic copies of this plan sheet.

T.Y. LIN / MOFFATT & NICHOL
825 BATTERY STREET
SAN FRANCISCO, CA 94111
To get to the web site, go to: http://www.dot.ca.gov

CANTILEVER BEAM (SECTION @ PP 113)
1:20

SECTION A-A
1:10

SECTION E-E
1:20

SECTION R-R
1:10

SECTION F-F
1:10

SECTION G-G
1:10

SECTION B-B
1:10

SECTION C-C
1:10

SECTION D-D
1:10

ALL DIMENSIONS ARE IN MILLIMETERS UNLESS OTHERWISE SHOWN

NOTES:
1. The cable location shown is based on the information provided in "Suspension Cable Layout" sheets. The Contractor shall verify these locations based on the "as built" cable profile described in "Construction Sequence" sheets. In the event of a conflict, bikepath bracket details may be revised and submitted to the Engineer for review and approval.
2. Bikepth deck similar to typical bikepath deck, for details, see "Bikepath Details No.3" sheets.
3. For Section H-H, see Section F-F of "Bikepath Details No.11" sheet.
4. Silicone caulking shall be provided along all edges of bolted connection between bikepath cantilever beam and box girder.

100 % PS&E

R. Vallizadeh/V. Toan/Y.L./M.L./F.C.
DESIGN OVERSIGHT
Ryan Vallizadeh / Vinh Toan / Y. Liu
SIGN OFF DATE 07/20/01
Rev. Date: 5-18-98

	BY	CHECKED
DESIGN	T. Ho	T. McMeans
DETAILS	R. Xu	P. Ritchie
QUANTITIES	C. Bernardo	S. Shi

PREPARED FOR THE STATE OF CALIFORNIA
DEPARTMENT OF TRANSPORTATION

R. Manzanarez
PROJECT ENGINEER

BRIDGE NO. 34-0006L/R
KILOMETER POST 13.2/13.9

CU 04
EA 0120F1

ORIGINAL SCALE IN MILLIMETERS FOR REDUCED PLANS 0 10 20 30 40 50 60 70 80 90 100

DISREGARD PRINTS BEARING EARLIER REVISION DATES

SAN FRANCISCO OAKLAND BAY BRIDGE
EAST SPAN SEISMIC SAFETY PROJECT
SELF-ANCHORED SUSPENSION BRIDGE (SUPERSTRUCTURE & TOWER)

BIKEPATH DETAILS NO. 10

REVISION DATES (PRELIMINARY STAGE ONLY)

SHEET 417R1

FILE => I:\bb\04-01200I\sas\contract plans and cco\cco\in progress\cco#33\ogbwd10.dgn

DATE PLOTTED => 19 JUL 2007 TIME PLOTTED => 14:03:22
USERNAME => ptan

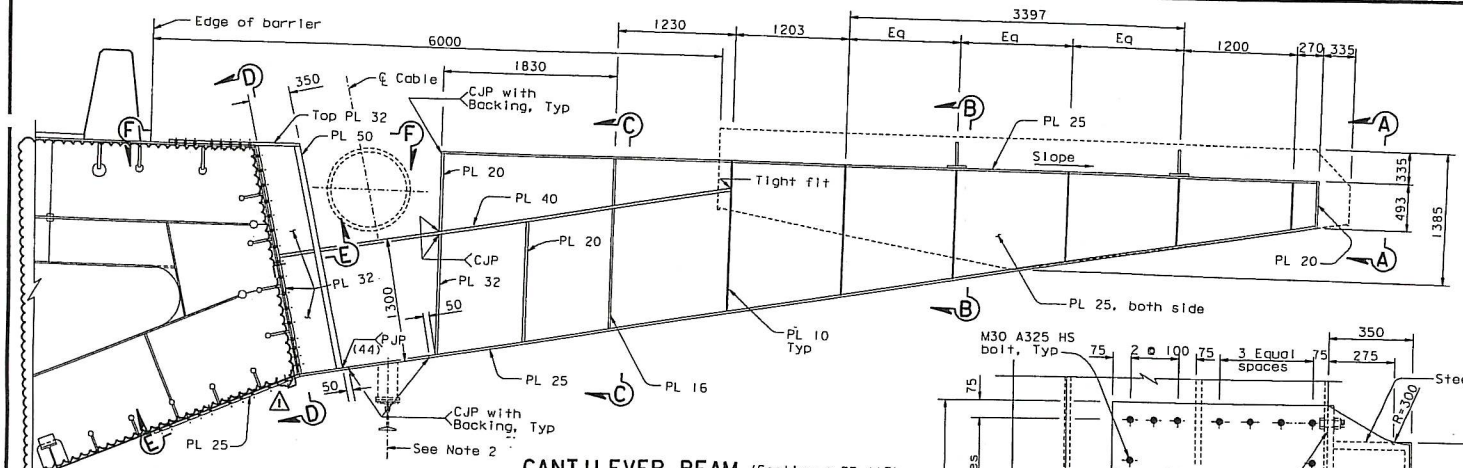

CANTILEVER BEAM (Section ℄ PP 117)

1:25

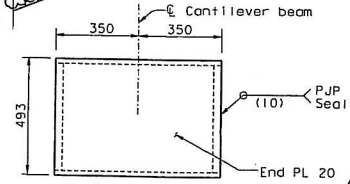

VIEW A-A

1:10

NOTES:

1. The cable location shown is based on the information provided in "Suspension Cable Layout" sheets. The Contractor shall verify these locations based on the "as built" cable profile described in "Construction Sequence" sheets. In the event of a conflict, bikepath bracket details may be revised and submitted to the Engineer for review and approval.
2. For location and details of traveler rail support, see "Traveler Rail Details No.13" sheet.
3. Silicone caulking shall be provided along all edges of bolted connection between bikepath cantilever beam and box girder.

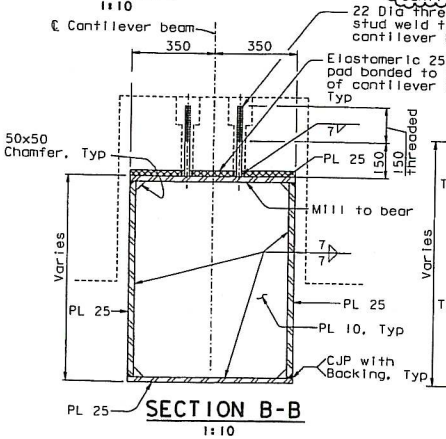

SECTION B-B

1:10

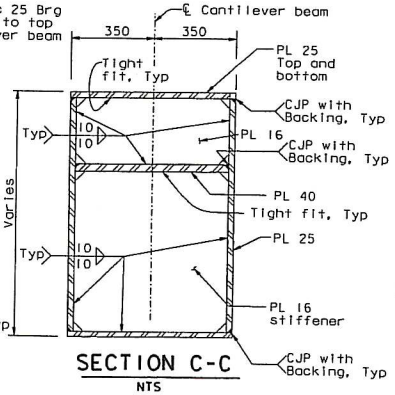

SECTION C-C

NTS

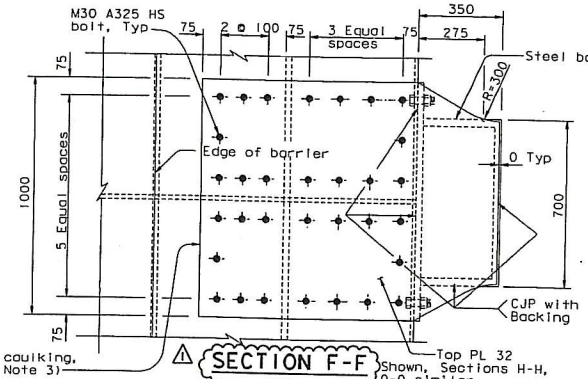

SECTION F-F

1:10

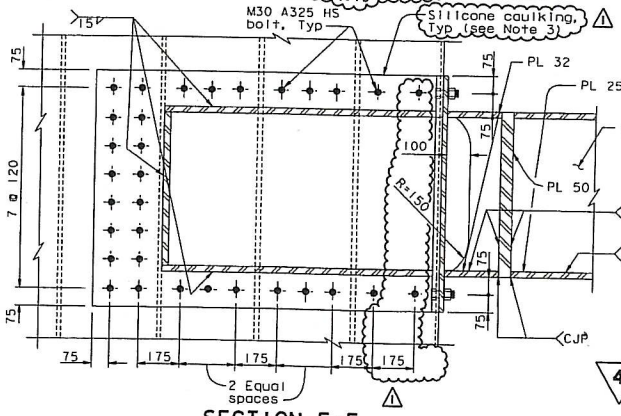

SECTION E-E

1:10

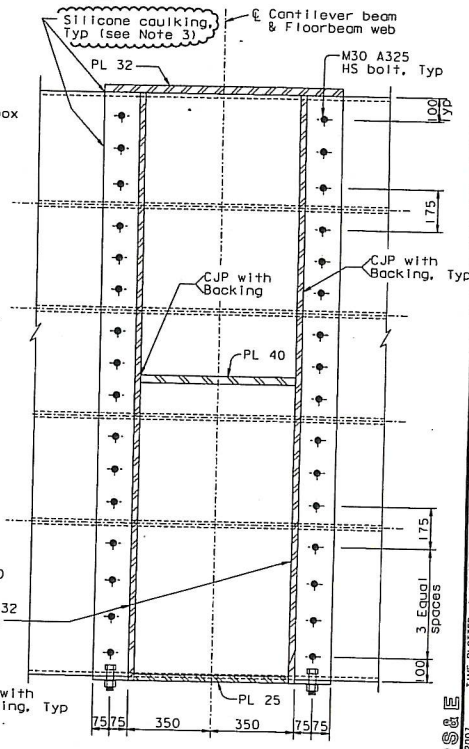

SECTION D-D

1:10

4 REVISED PER ADDENDUM NO. 4 DATED DECEMBER 9, 2005

ALL DIMENSIONS ARE IN MILLIMETERS UNLESS OTHERWISE SHOWN

DIST.	COUNTY	ROUTE	KILOMETER POST TOTAL PROJECT	SHEET NO.	TOTAL SHEETS
04	SF	80	13.2/13.9	835RI	1204

Caltrans Metric

REGISTERED ENGINEER - CIVIL

Tien Hung Ho No. C 43990 Exp. 6/30/09 CIVIL STATE OF CALIFORNIA

12-6-04

PLANS APPROVAL DATE

The State of California or its officers or agents shall not be responsible for the accuracy or completeness of electronic copies of this plan sheet.

T.Y. LIN / MOFFATT & NICHOL
825 BATTERY STREET
SAN FRANCISCO, CA 94111

To get to the web site, go to: http://www.dot.ca.gov

100 % PS&E

DATE PLOTTED => 19 JUL 2007 TIME PLOTTED => 14:47:50

USERNAME => ptam

R. Vallzadeh/V. Toan/Y.L./W.L./F.C.
DESIGN OVERSIGHT
SIGN OFF DATE 07/20/07
Rev. Date: 5-15-95

MARK	DATE	DESCRIPTIONS	BY	CH'D	CCO#
1	07/20/07	BIKEPATH BRACKETS	GB	TH	33

REVISIONS

CONTRACT CHANGE ORDER NO. 33
SHEET 7 OF 8

	BY	CHECKED
DESIGN	T. Ho	T. McMeans
DETAILS	R. Xu	P. Ritchie
QUANTITIES	C. Bernardo	S. Shi

PREPARED FOR THE STATE OF CALIFORNIA DEPARTMENT OF TRANSPORTATION

R. Manzanarez
PROJECT ENGINEER

ORIGINAL SCALE IN MILLIMETERS FOR REDUCED PLANS 0 10 20 30 40 50 60 70 80 90 100

CU 04
EA 0120F1

FILE => I:\bb\04-0120f1\sas\contract plans and cco\cco\in progress\cco*33\sgbwd11.dgn

BRIDGE NO.	34-0006L/R
KILOMETER POST	13.2/13.9

DISREGARD PRINTS BEARING EARLIER REVISION DATES

REVISION DATES (PRELIMINARY STAGE ONLY)

SAN FRANCISCO OAKLAND BAY BRIDGE
EAST SPAN SEISMIC SAFETY PROJECT
SELF-ANCHORED SUSPENSION BRIDGE
(SUPERSTRUCTURE & TOWER)

BIKEPATH DETAILS NO. 11

SHEET 416RI OF

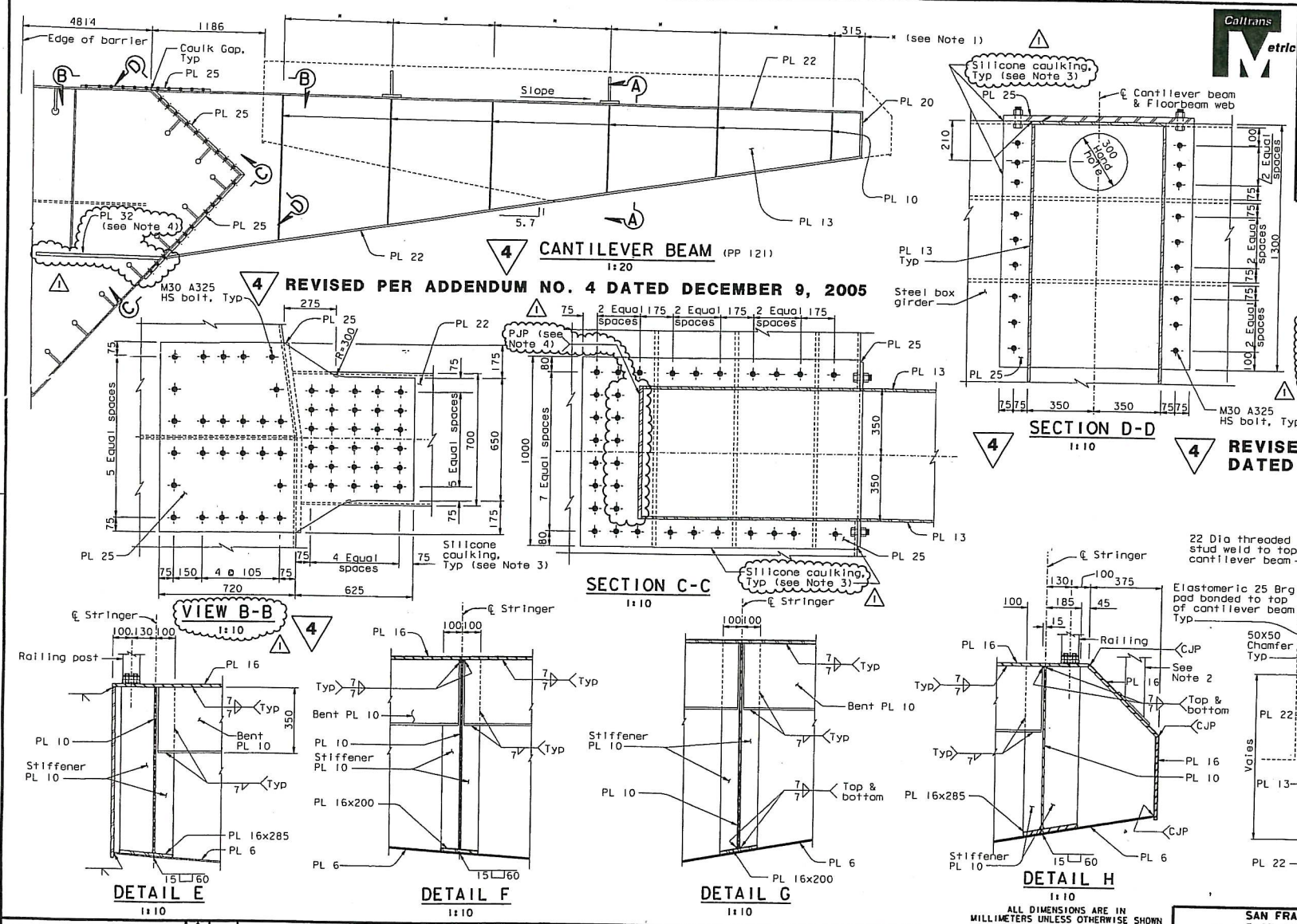

DIST.	COUNTY	ROUTE	KILOMETER POST TOTAL PROJECT	SHEET NO.	TOTAL SHEETS
04	SF	80	13.2/13.9	836R1	1204

REGISTERED ENGINEER - CIVIL

12-6-04

PLANS APPROVAL DATE

The State of California or its officers or agents shall not be responsible for the accuracy or completeness of electronic copies of this plan sheet.

REGISTERED PROFESSIONAL ENGINEER Tien Hung Ho No. C 43990 Exp. 06/30/09 CIVIL STATE OF CALIFORNIA

T.Y. LIN / MOFFATT & NICHOL
825 BATTERY STREET
SAN FRANCISCO, CA 94111

To get to the web site, go to: http://www.dot.ca.gov

NOTES:

1. Stiffener plate spacing to match bikepath stringer spacing, see "Bikepath Framing Details No. 5" sheet.
2. For call box support locations and details, see "Road Plans".
3. Silicone caulking shall be provided along all edges of bolted connection between bikepath cantilever beam and box girder.
4. For bikepath bracket stiffener, see Note 6 on "Floorbeam At East Transition No. 4" sheet.

ALL DIMENSIONS ARE IN MILLIMETERS UNLESS OTHERWISE SHOWN

MARK	DATE	DESCRIPTIONS	BY	CH'D	CCO#
1	07/20/07	BIKEPATH BRACKETS	GB	TH	33

REVISIONS

CONTRACT CHANGE ORDER NO. 33
SHEET 6 OF 8

R. Valizadeh/V. Toan/Y.L./W.L./F.C.
DESIGN OVERSIGHT
SIGN OFF DATE 07/20/07
Rev. Date: 5-18-98

DESIGN BY T. Ho — CHECKED T. McMeans
DETAILS BY R. Xu — CHECKED P. Ritchie
QUANTITIES BY C. Bernardo — CHECKED S. Shi

ORIGINAL SCALE IN MILLIMETERS FOR REDUCED PLANS 0 10 20 30 40 50 60 70 80 90 100

PREPARED FOR THE STATE OF CALIFORNIA DEPARTMENT OF TRANSPORTATION

R. Manzanarez
PROJECT ENGINEER

BRIDGE NO. 34-0006L/R
KILOMETER POST 13.2/13.9

CU 04
EA 0120F1

DISREGARD PRINTS BEARING EARLIER REVISION DATES

SAN FRANCISCO OAKLAND BAY BRIDGE
EAST SPAN SEISMIC SAFETY PROJECT
SELF-ANCHORED SUSPENSION BRIDGE
(SUPERSTRUCTURE & TOWER)

BIKEPATH DETAILS NO. 12

REVISION DATES (PRELIMINARY STAGE ONLY)

SHEET 419R1 OF

FILE => I:\bb\04-012001\sas\contract plans and cco\cco\in progress\cco#33\agbwd12.dgn

100 % PS&E
DATE PLOTTED => 19 JUL 2007 TIME PLOTTED => 14:07:06
USERNAME => ptom

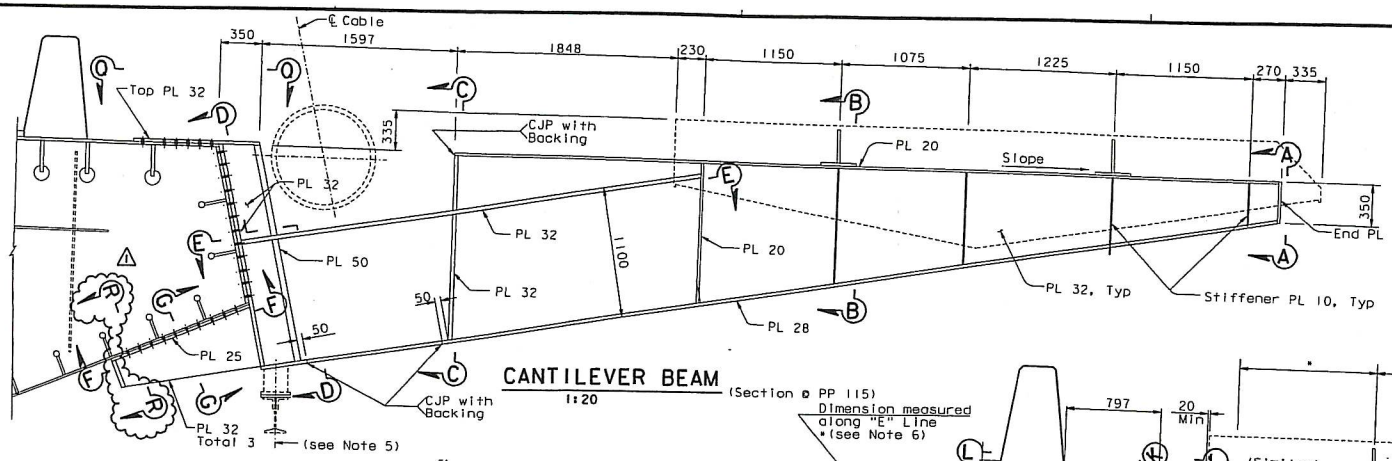

CANTILEVER BEAM (Section ℄ PP 115)
1:20

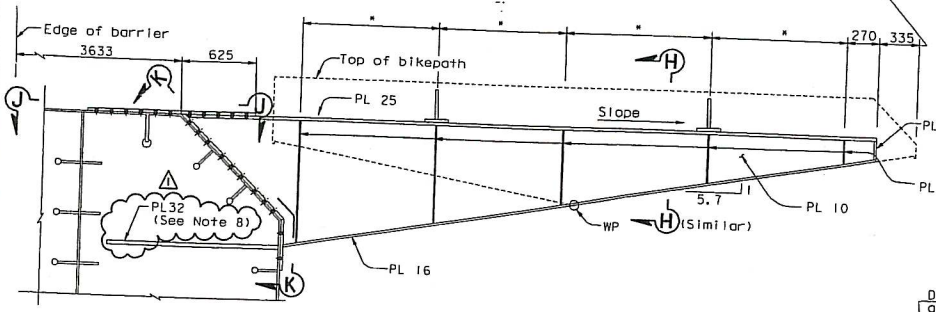

CANTILEVER BEAM (PP123)
1:20

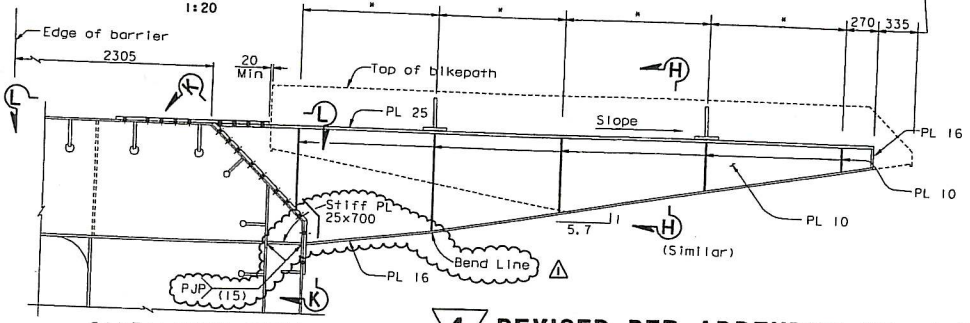

CANTILEVER BEAM (PP125)
1:20

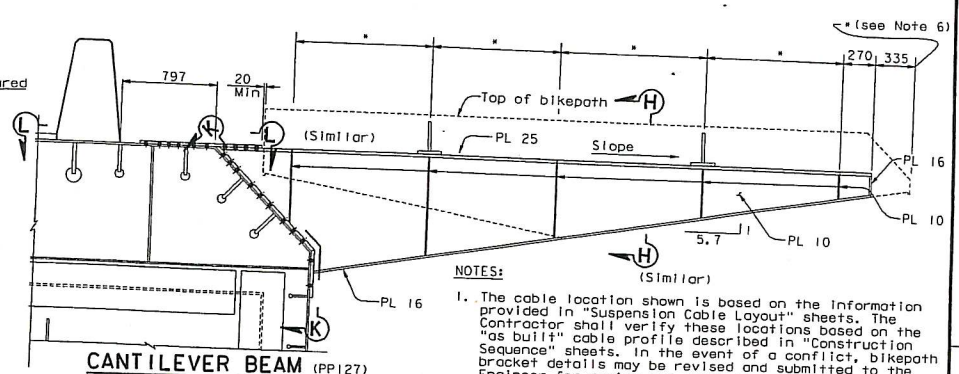

CANTILEVER BEAM (PP127)
1:20
Dimension measured along "E" Line

NOTES:

1. The cable location shown is based on the information provided in "Suspension Cable Layout" sheets. The Contractor shall verify these locations based on the "as built" cable profile described in "Construction Sequence" sheets. In the event of a conflict, bikepath bracket details may be revised and submitted to the Engineer for review and approval.

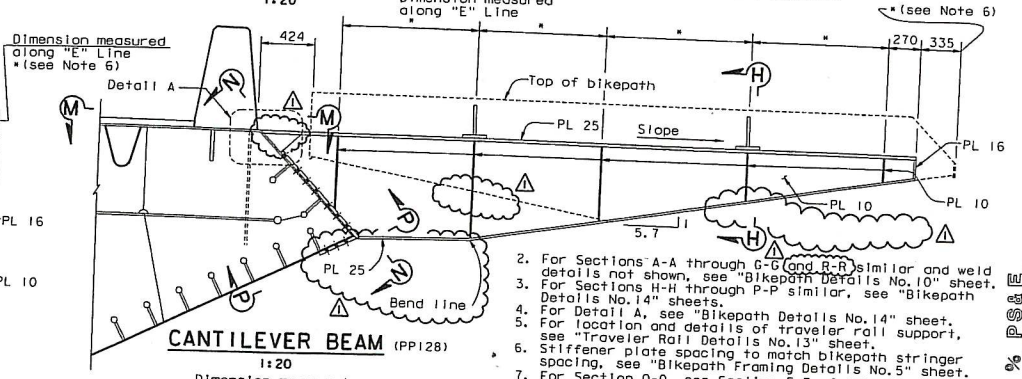

CANTILEVER BEAM (PP128)
1:20
Dimension measured along "E" Line

2. For Sections A-A through G-G (and R-R) similar and weld details not shown, see "Bikepath Details No.10" sheet.
3. For Sections H-H through P-P similar, see "Bikepath Details No.14" sheets.
4. For Detail A, see "Bikepath Details No.14" sheet.
5. For location and details of traveler rail support, see "Traveler Rail Details No.13" sheet.
6. Stiffener plate spacing to match bikepath stringer spacing, see "Bikepath Framing Details No.5" sheet.
7. For Section O-O, see Section F-F of "Bikepath Details No.11" sheet.
8. For bikepath bracket stiffener, see Note 6 on "Floorbeam At East Transition No.5" sheet.

4 REVISED PER ADDENDUM NO. 4 DATED DECEMBER 9, 2005

ALL DIMENSIONS ARE IN MILLIMETERS UNLESS OTHERWISE SHOWN

DIST.	COUNTY	ROUTE	KILOMETER POST TOTAL PROJECT	SHEET NO.	TOTAL SHEETS
04	SF	80	13.2/13.9	837RI	1204

Caltrans Metric

REGISTERED ENGINEER - CIVIL
12-6-04
PLANS APPROVAL DATE
The State of California or its officers or agents shall not be responsible for the accuracy or completeness of electronic copies of this plan sheet.

Tien Hung Ho, No. C 43990, Exp. 06/30/09, CIVIL, REGISTERED PROFESSIONAL ENGINEER, STATE OF CALIFORNIA

T.Y. LIN / MOFFATT & NICHOL
825 BATTERY STREET
SAN FRANCISCO, CA 94111

To get to the web site, go to: http://www.dot.ca.gov

R. Vallizadeh/V. Toan/Y.L./W.L./F.C.
DESIGN OVERSIGHT
SIGN OFF DATE 07/20/07
Rev. Date: 5-18-98

MARK	DATE	DESCRIPTIONS	BY	CH'D	CCO#
4	07/20/07	BIKEPATH BRACKETS	GB	TH	33

REVISIONS

CONTRACT CHANGE ORDER NO. 33
SHEET 7 OF 8

	BY	CHECKED
DESIGN	T. Ho	T. McMeans
DETAILS	R. Xu	P. Ritchie
QUANTITIES	C. Bernardo	S. Shi

ORIGINAL SCALE IN MILLIMETERS FOR REDUCED PLANS 0 10 20 30 40 50 60 70 80 90 100

PREPARED FOR THE STATE OF CALIFORNIA DEPARTMENT OF TRANSPORTATION

R. Manzanarez
PROJECT ENGINEER

CU 04
EA 0120F1

BRIDGE NO.	34-0006L/R
KILOMETER POST	13.2/13.9

DISREGARD PRINTS BEARING EARLIER REVISION DATES

SAN FRANCISCO OAKLAND BAY BRIDGE
EAST SPAN SEISMIC SAFETY PROJECT
SELF-ANCHORED SUSPENSION BRIDGE
(SUPERSTRUCTURE & TOWER)

BIKEPATH DETAILS NO. 13

REVISION DATES (PRELIMINARY STAGE ONLY)

SHEET 420RI OF

FILE => I:\bb\04-0120I\sos\contract plans and cco\cco\in progress\cco-33\agbwdl3.dgn

DATE PLOTTED => 19 JUL 2007 TIME PLOTTED => 14:08:16
USERNAME => ptan
100 % PS&E

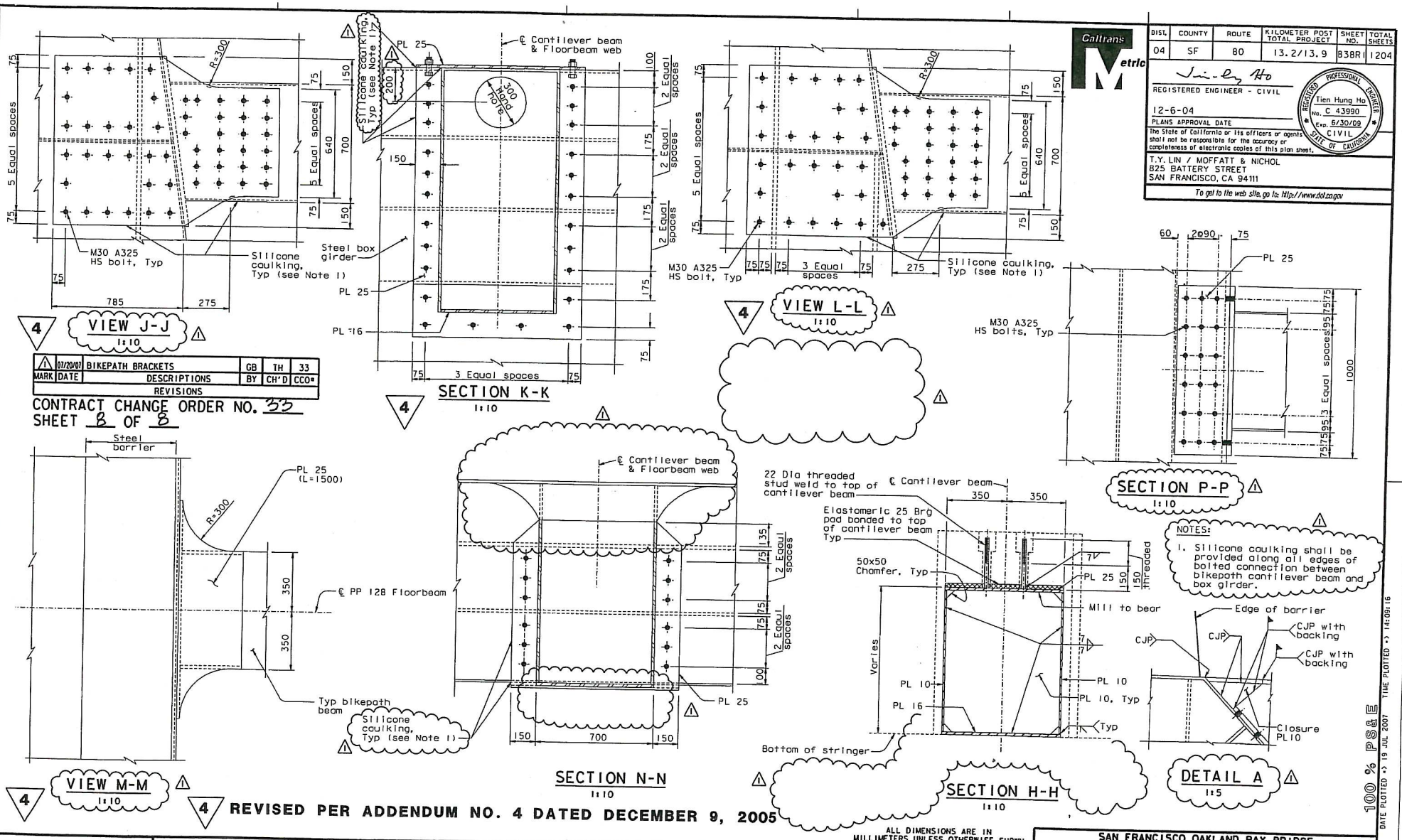

MARK	DATE	DESCRIPTIONS	BY	CH'D	CCO#
1	07/20/07	BIKEPATH BRACKETS	GB	TH	33

REVISIONS

CONTRACT CHANGE ORDER NO. 33
SHEET 8 OF 8

NOTES:

1. Silicone caulking shall be provided along all edges of bolted connection between bikepath cantilever beam and box girder.

4 REVISED PER ADDENDUM NO. 4 DATED DECEMBER 9, 2005

ALL DIMENSIONS ARE IN MILLIMETERS UNLESS OTHERWISE SHOWN

DIST.	COUNTY	ROUTE	KILOMETER POST TOTAL PROJECT	SHEET NO.	TOTAL SHEETS
04	SF	80	13.2/13.9	838R1	1204

Caltrans Metric

REGISTERED ENGINEER - CIVIL
12-6-04
PLANS APPROVAL DATE

The State of California or its officers or agents shall not be responsible for the accuracy or completeness of electronic copies of this plan sheet.

REGISTERED PROFESSIONAL ENGINEER Tien Hung Ho No. C 43990 Exp. 6/30/09 CIVIL STATE OF CALIFORNIA

T.Y. LIN / MOFFATT & NICHOL
825 BATTERY STREET
SAN FRANCISCO, CA 94111

To get to the web site, go to: http://www.dot.ca.gov

R. Valizadeh/V. Toan/Y.L./W.L./F.C.
DESIGN OVERSIGHT
Roger Valizadeh / Vong Toan / Y. Liu
SIGN OFF DATE 07/20/07
Rev. Date: 5-18-98

DESIGN	BY T. Ho	CHECKED T. McMeans	
DETAILS	BY R. Xu	CHECKED P. Ritchie	
QUANTITIES	BY C. Bernardo	CHECKED S. Shi	

PREPARED FOR THE STATE OF CALIFORNIA DEPARTMENT OF TRANSPORTATION

R. Manzanarez
PROJECT ENGINEER

BRIDGE NO. 34-0006L/R
KILOMETER POST 13.2/13.9

CU 04
EA 0120F1

SAN FRANCISCO OAKLAND BAY BRIDGE
EAST SPAN SEISMIC SAFETY PROJECT
SELF-ANCHORED SUSPENSION BRIDGE (SUPERSTRUCTURE & TOWER)

BIKEPATH DETAILS NO. 14

ORIGINAL SCALE IN MILLIMETERS FOR REDUCED PLANS 0 10 20 30 40 50 60 70 80 90 100

DISREGARD PRINTS BEARING EARLIER REVISION DATES

REVISION DATES (PRELIMINARY STAGE ONLY) 05/24/21 04/06/02 01/21/02 12/18/02 11/13/05

SHEET 421R1 OF

FILE => I:\bb\04-012001\sas\contract plans and cco\cco\in progress\cco#33\agbwd14.dgn

100 % PS&E
DATE PLOTTED => 19 JUL 2007 TIME PLOTTED => 14:09:16
USERNAME => ptom