| DIST | COUNTY | ROUTE | KILOMETER POST TOTAL PROJECT | SHEET No | TOTAL SHEETS |
|---|---|---|---|---|---|
| 04 | SF | 80 | 13.2/13.9 | 61R1 | 1204 |

Caltrans Metric

Robert E. Bethel
REGISTERED MECHANICAL ENGINEER

12-6-04
PLANS APPROVAL DATE

REGISTERED PROFESSIONAL ENGINEER ROBERT E. BETHEL No. M018543 Exp. 9/30/06 MECHANICAL STATE OF CALIFORNIA

T.Y. LIN / MOFFATT & NICHOL
825 BATTERY STREET
SAN FRANCISCO, CA 94111

*The State of California or its officers or agents shall not be responsible for the accuracy or completeness of electronic copies of this plan sheet.*

*Caltrans now has a web site! To get to the web site, go to http://www.dot.ca.gov*

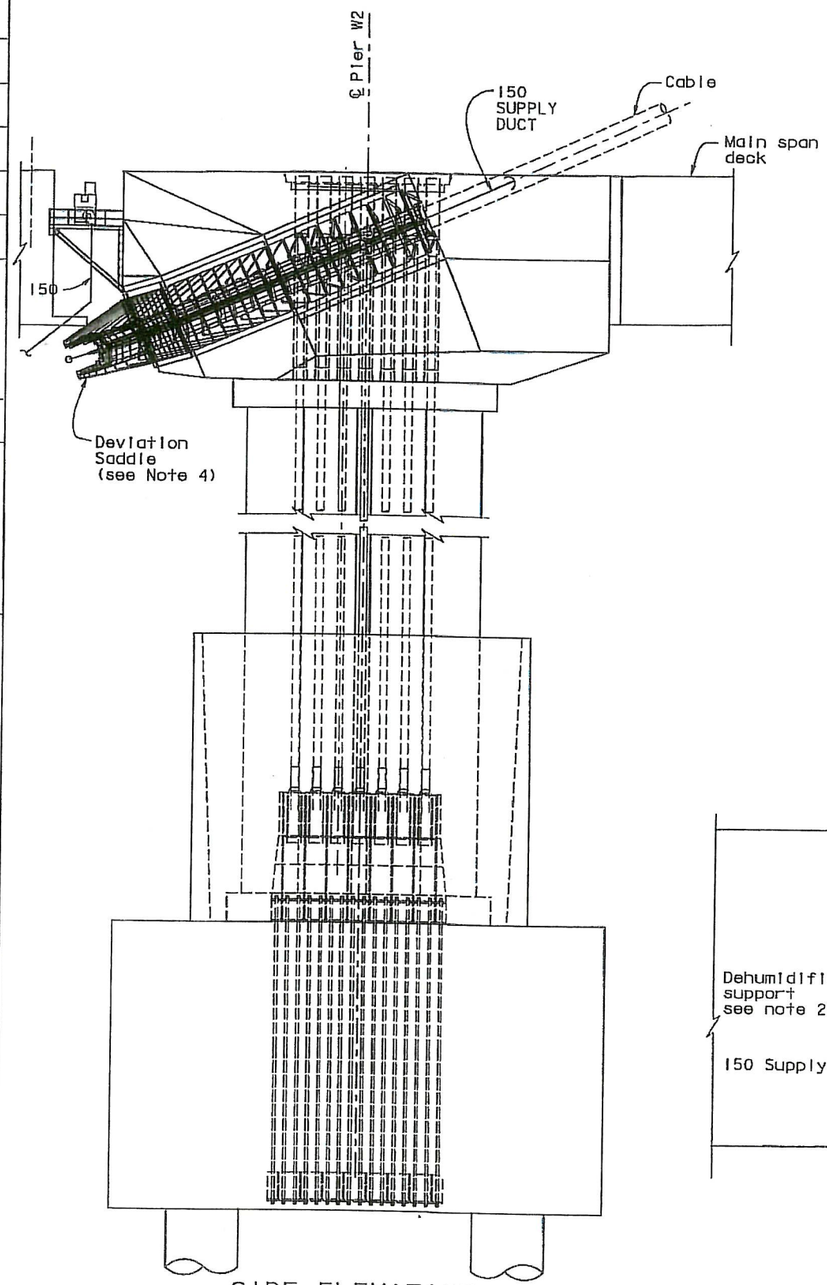


SIDE ELEVATION
1:100

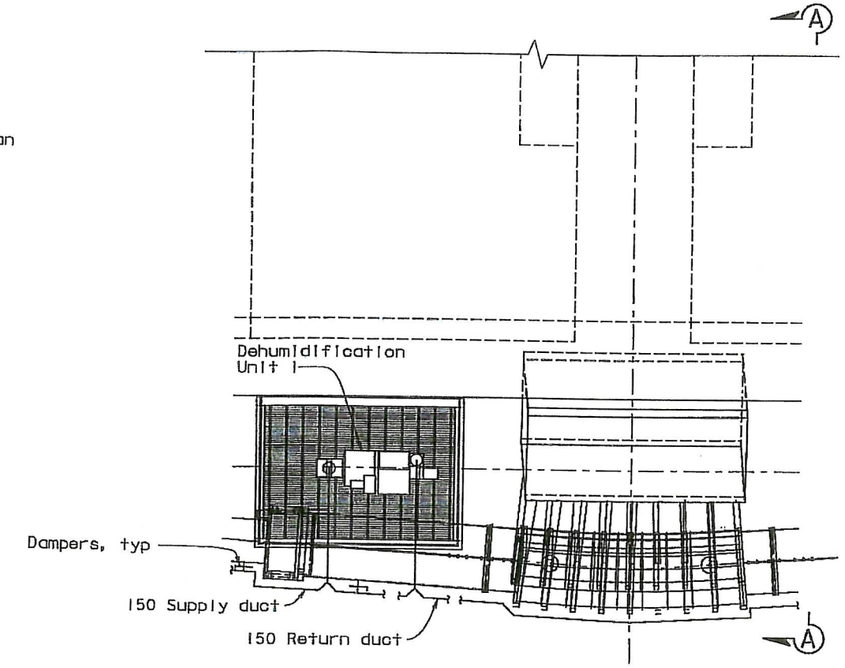


DETAIL A
1:80

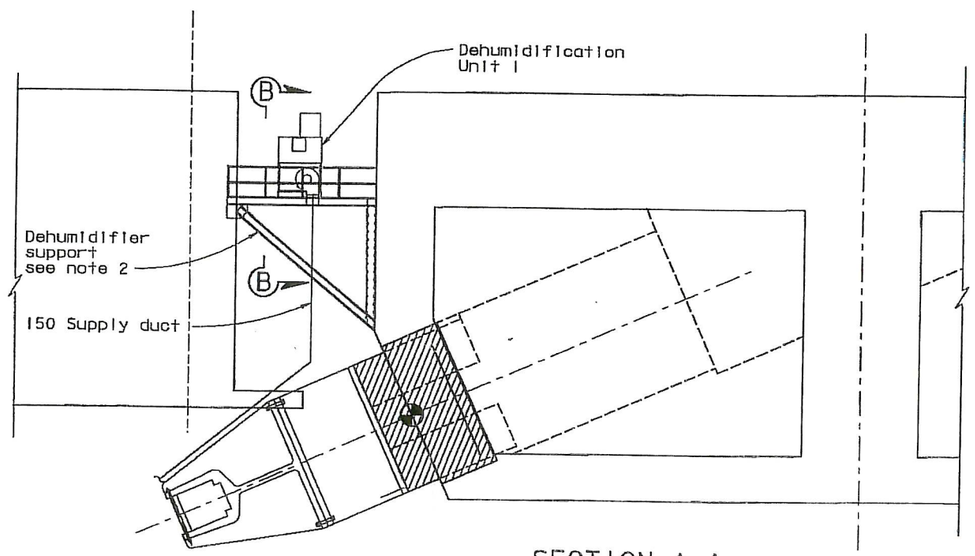


SECTION A-A
1:50

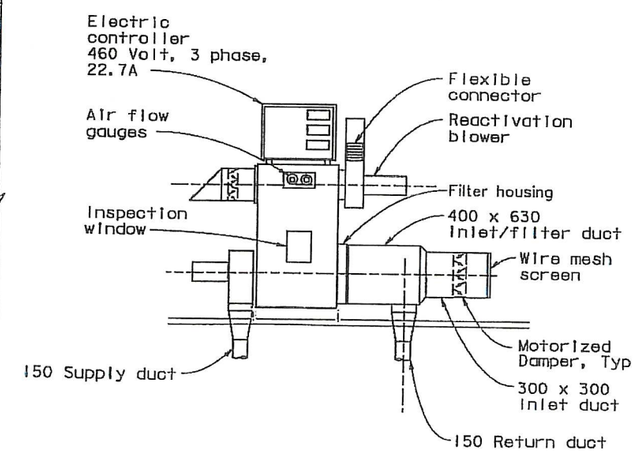


SECTION B-B (See Note 5) △1
1:20

REGISTERED PROFESSIONAL ENGINEER Jal N. Birdy No. C 41547 Exp. 12/31/07 CIVIL STATE OF CALIFORNIA

FOR REVISIONS ONLY

| MARK | DATE | DESCRIPTIONS | BY | CH'D | CCO# |
|---|---|---|---|---|---|
| △1 | 05/23/07 | DEHUMIDIFICATION SYSTEM | JB | AS | 32 |

REVISIONS

CONTRACT CHANGE ORDER NO. 32
SHEET 3 OF 5

NOTES:

1. For location of Detail A, see "West Cable Anchorage Dehumidification Detail No. 1" sheet.
2. For dehumidifier support, see Bridge Plans.
3. For duct connection to cable shroud, see Bridge Plans.
4. Views of deviation saddle are for illustration only. For deviation saddle details, see "West Deviation Saddle Details" sheets.
5. △1 Exhaust shall be oriented away from service personnel. Exhast duct may be extended out or down. It may also be extended up, provided a rain hood is used.

**WEST CABLE ANCHORAGE DEHUMIDIFICATION DETAIL NO. 2**

ALL DIMENSION ARE IN MILLIMETERS UNLESS OTHERWISE SHOWN

**M-25**

SAS STRUCTURE

STATE OF CALIFORNIA - DEPARTMENT OF TRANSPORTATION

Caltrans

DESIGN OVERSIGHT: Bob Zandipour

CALCULATED/DESIGNED BY: ES DATE 5/3/02
CHECKED BY: RB 5/3/02
REVISED BY
DATE REVISED

DATE PLOTTED => 21 MAY 2007

LAST REVISION

FOR REDUCED PLANS ORIGINAL 0 20 40 60 80

FILE => I:\bb\04-012001\sas\contract plans and cco\cco\in progress\cco#32\40120fub025.dgn

EA 0120E1

| DIST. | COUNTY | ROUTE | KILOMETER POST TOTAL PROJECT | SHEET NO. | TOTAL SHEETS |
|---|---|---|---|---|---|
| 04 | SF | 80 | 13.2/13.9 | 960R1 | 1204 |

Caltrans Metric

George Baker
REGISTERED ENGINEER - CIVIL
1-27-03
PLANS APPROVAL DATE

REGISTERED PROFESSIONAL ENGINEER George S. Baker No. C 57112 Exp. 12/31/05 CIVIL STATE OF CALIFORNIA

The State of California or its officers or agents shall not be responsible for the accuracy or completeness of electronic copies of this plan sheet.

T.Y. LIN / MOFFATT & NICHOL
825 BATTERY STREET
SAN FRANCISCO, CA 94111

To get to the web site, go to: http://www.dot.ca.gov

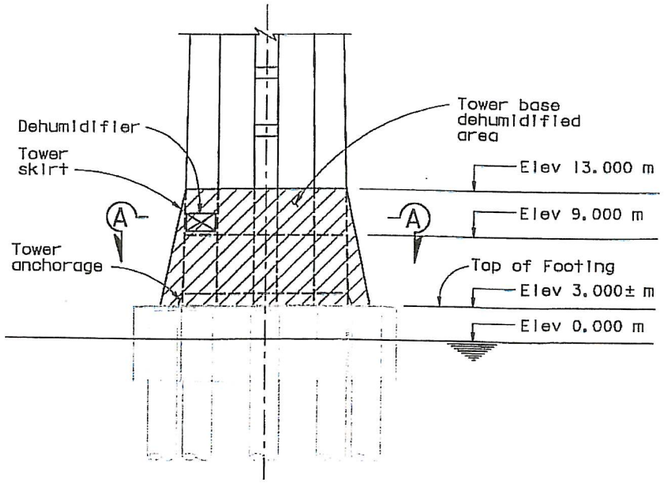


DETAIL B Looking South
1:250

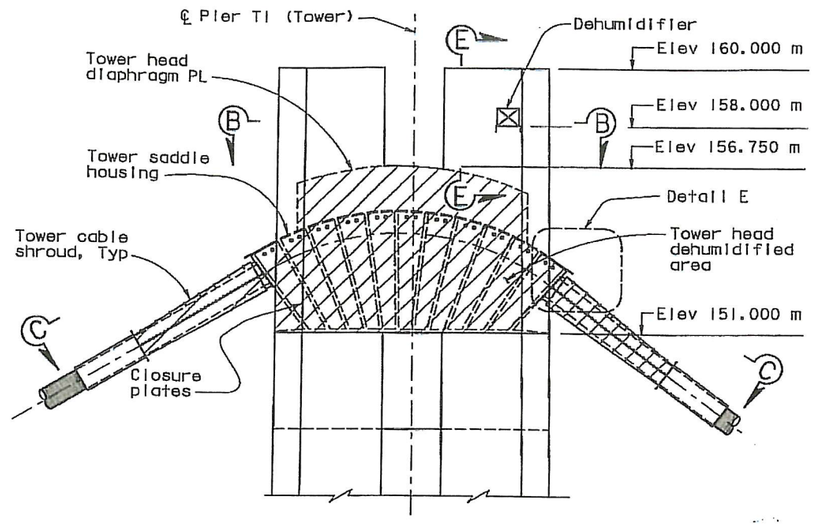


DETAIL C Looking South
1:100

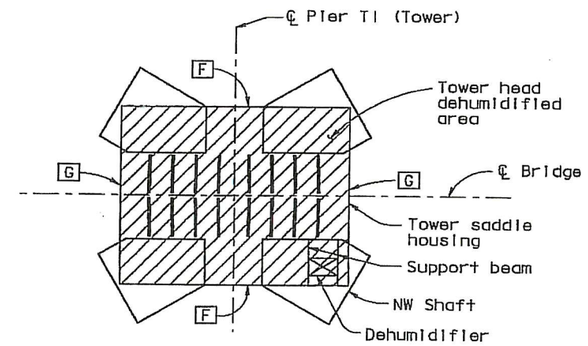


SECTION B-B
1:100

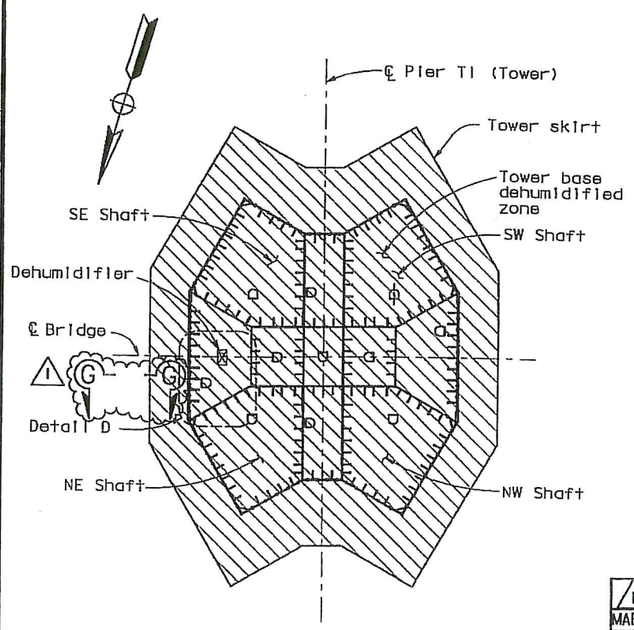


SECTION A-A
1:150

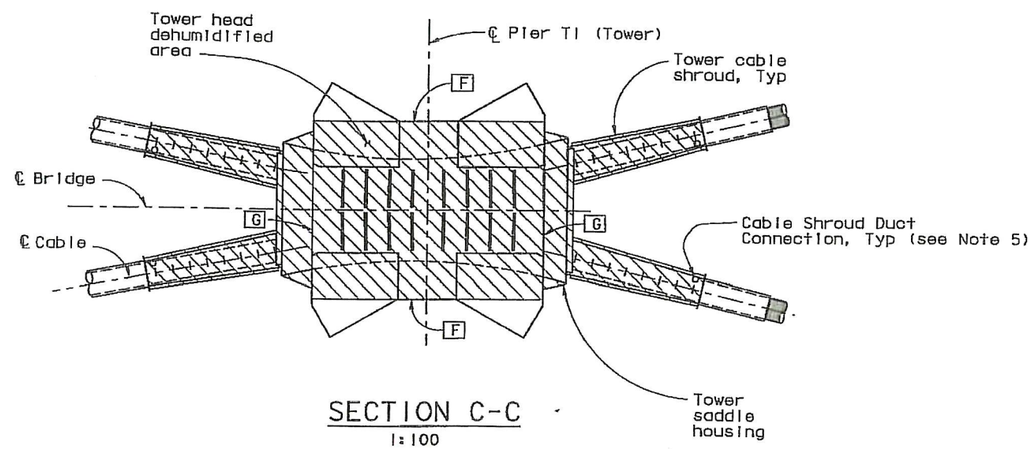


SECTION C-C
1:100

LEGEND:

Limits of dehumidification

Dehumidifier

NOTES:

1. For details of tower head walls F and G, and diaphragm PL, see "Tower Head Details" sheets.
2. For tower saddle housing and closure plates, see "Tower Saddle Housing" sheets.
3. For tower cable shroud details, see "Tower Cable Shroud Details" sheets.
4. 1 For Details D, E and Sections E-E and G-G, see "Dehumidification Support Details No.5" sheet.
5. For Cable Shroud Duct Connection, see "Dehumidification Support Details No.5" sheet.

| MARK | DATE | DESCRIPTIONS | BY | CH'D | CCO# |
|---|---|---|---|---|---|
| 1 | 05/23/07 | DEHUMIDIFICATION SYSTEM | GB | DT | 32 |
| | | REVISIONS | | | |

CONTRACT CHANGE ORDER NO. 32
SHEET 4 OF 5

REGISTERED PROFESSIONAL ENGINEER Donald J. Turner No. C 65033 Exp. 06/30/07 CIVIL STATE OF CALIFORNIA

FOR REVISIONS ONLY

ALL DIMENSIONS ARE IN MILLIMETERS UNLESS OTHERWISE SHOWN

100 % PS&E

TIME PLOTTED => 11:16:49
DATE PLOTTED => 21 MAY 2007
USERNAME => vignatovsk

R. Vallzadeh/V. Toan/Y.L./W.L./F.C.
DESIGN OVERSIGHT
Roya Vallzadeh / Vong Toan / Y. Liu
SIGN OFF DATE 05/23/07
Rev. Date: 5-18-06

| | | | |
|---|---|---|---|
| DESIGN | BY G. Baker | CHECKED T. Ho | |
| DETAILS | BY C. Mauch | CHECKED T. Ho | |
| QUANTITIES | BY C. Mauch | CHECKED D. Harrison | |

PREPARED FOR THE STATE OF CALIFORNIA DEPARTMENT OF TRANSPORTATION

R. Manzanarez
PROJECT ENGINEER

BRIDGE NO. 34-0006L/R
KILOMETER POST 13.2/13.9

SAN FRANCISCO OAKLAND BAY BRIDGE
EAST SPAN SEISMIC SAFETY PROJECT
SELF-ANCHORED SUSPENSION BRIDGE
(SUPERSTRUCTURE & TOWER)

DEHUMIDIFICATION SUPPORT DETAILS NO. 4

ORIGINAL SCALE IN MILLIMETERS FOR REDUCED PLANS 0 10 20 30 40 50 60 70 80 90 100

CU 04
EA 0120F1

DISREGARD PRINTS BEARING EARLIER REVISION DATES

REVISION DATES (PRELIMINARY STAGE ONLY) 01/20/02 01/29/02 12/19/02

SHEET 543R1 OF

FILE => L:\BB\04-012001\SAS\Contract Plans and CCO\CCO\In Progress\CCO#32\akdeh04.dgn

| DIST. | COUNTY | ROUTE | KILOMETER POST TOTAL PROJECT | SHEET NO. | TOTAL SHEETS |
|---|---|---|---|---|---|
| 04 | SF | 80 | 13.2/13.9 | 961R1 | 1204 |

George Baker
REGISTERED ENGINEER - CIVIL
1-27-03
PLANS APPROVAL DATE

REGISTERED PROFESSIONAL ENGINEER George S. Baker No. C 57112 Exp. 12/31/05 CIVIL STATE OF CALIFORNIA

The State of California or its officers or agents shall not be responsible for the accuracy or completeness of electronic copies of this plan sheet.

T.Y. LIN / MOFFATT & NICHOL
825 BATTERY STREET
SAN FRANCISCO, CA 94111

To get to the web site, go to: http://www.dot.ca.gov

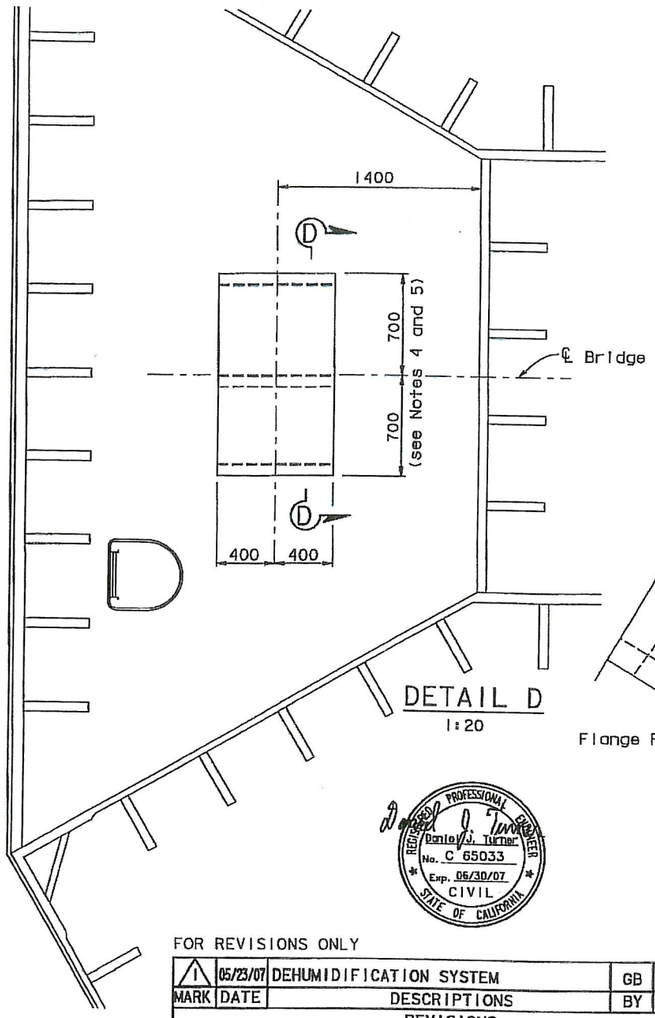


DETAIL D
1:20

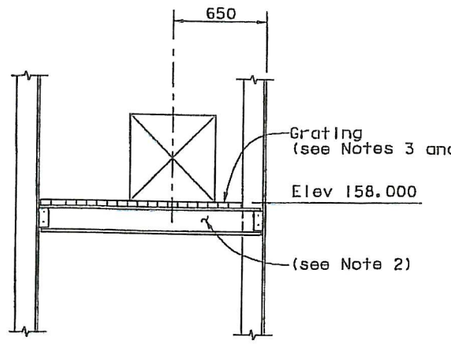


SECTION E-E
1:20

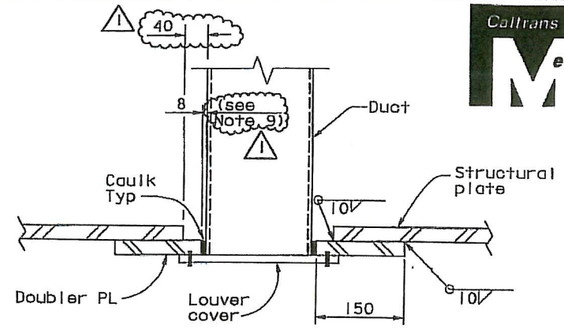


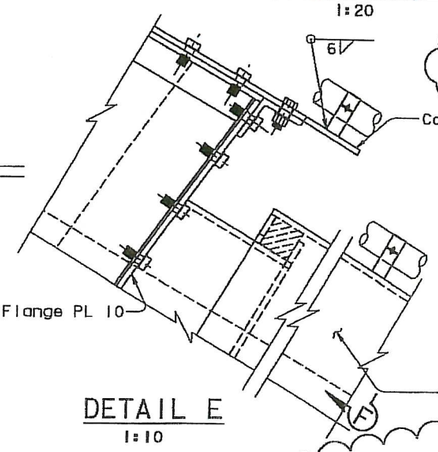


DETAIL E
1:10

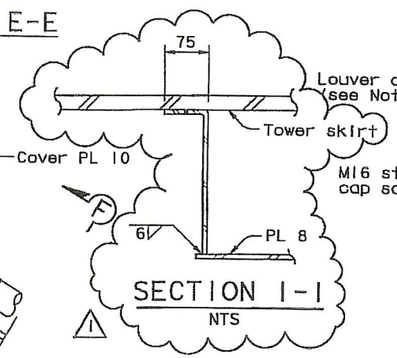


SECTION I-I
NTS

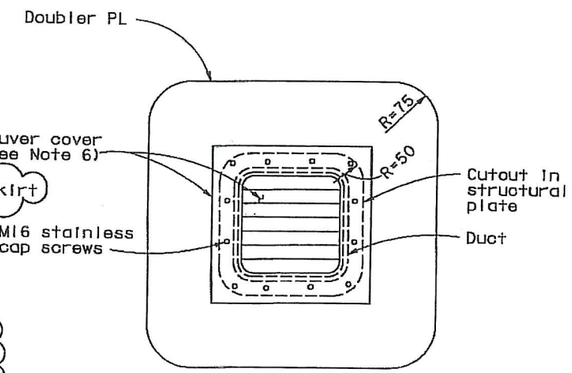


DUCT OPENING DETAIL (see Note 1)
1:5
Rectangular shown, circular similar

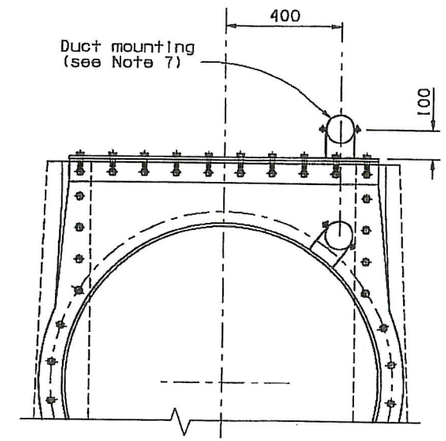


SECTION F-F
1:10

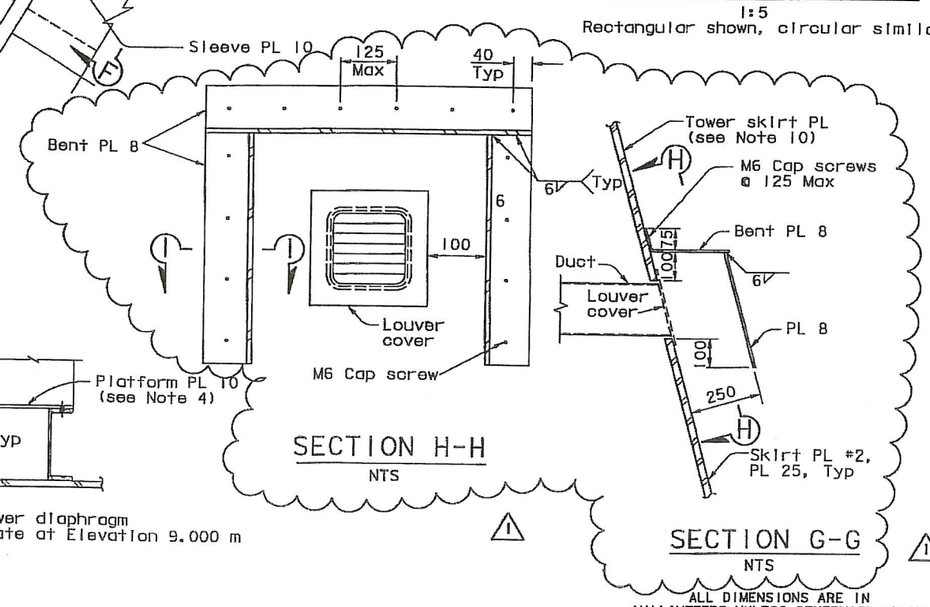


SECTION H-H
NTS

SECTION G-G
NTS

ALL DIMENSIONS ARE IN MILLIMETERS UNLESS OTHERWISE SHOWN

NOTES:

1. For all duct openings doubler plates shall equal the penetrated structural plate.
2. For walkway support beams, see "Tower Access Details No. 3" sheet.
3. Galvanized steel grating with fasteners to be provided by contractor. Grating working load shall be 7.0 kN/m (145 psf).
4. Base frames, support beams and fasteners shall be detailed to fit the dehumidifier.
5. For support platform details not shown, see "Dehumidification Support Details No. 3" sheet.
6. For louver locations and details, see "East Cable Anchorage Dehumidification" sheets.
7. For similar duct mounting, see Detail B on "East Cable Anchorage Dehumidification Detail No. 2" in the mechanical sheets.
8. Cable shroud pipe sleeve and duct connection shall be detailed to permit airtight bolted attachment of the dehumidification ducts. See mechanical sheets.
9. At Contractor's option, a gap of up to 25 mm may be used. For 25 mm gap, caulking with backing shall be used.
10. For tower skirt, doubler PL not used.

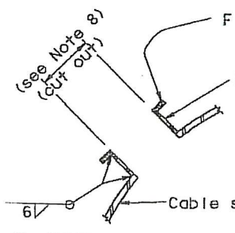


CABLE SHROUD DUCT CONNECTION (see Note 8)
1:5

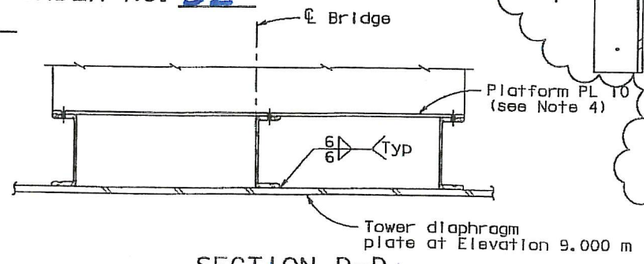


SECTION D-D
1:10

REGISTERED PROFESSIONAL ENGINEER Daniel J. Turner No. C 65033 Exp. 06/30/07 CIVIL STATE OF CALIFORNIA

FOR REVISIONS ONLY

| MARK | DATE | DESCRIPTIONS | BY | CH'D | CCO# |
|---|---|---|---|---|---|
| 1 | 05/23/07 | DEHUMIDIFICATION SYSTEM | GB | DT | 32 |
| | | REVISIONS | | | |

CONTRACT CHANGE ORDER NO. 32
SHEET 5 OF 5

R. Valizadeh/V. Toan/Y.L./W.L./F.C.
DESIGN OVERSIGHT
Roya Valizadeh / Vong Toan / Y. Liu
SIGN OFF DATE 05/23/07
Rev. Date: 5-18-00

| | | | |
|---|---|---|---|
| DESIGN | BY G. Baker | CHECKED T. Ho | |
| DETAILS | BY C. Mauch | CHECKED T. Ho | |
| QUANTITIES | BY C. Mauch | CHECKED D. Harrison | |

PREPARED FOR THE STATE OF CALIFORNIA DEPARTMENT OF TRANSPORTATION

R. Manzanarez
PROJECT ENGINEER

BRIDGE NO. 34-0006L/R
KILOMETER POST 13.2/13.9

SAN FRANCISCO OAKLAND BAY BRIDGE
EAST SPAN SEISMIC SAFETY PROJECT
SELF-ANCHORED SUSPENSION BRIDGE
(SUPERSTRUCTURE & TOWER)
DEHUMIDIFICATION SUPPORT DETAILS NO. 5

ORIGINAL SCALE IN MILLIMETERS FOR REDUCED PLANS 0 10 20 30 40 50 60 70 80 90 100

CU 04
EA 0120F1

DISREGARD PRINTS BEARING EARLIER REVISION DATES

REVISION DATES (PRELIMINARY STAGE ONLY) 01/04/02 01/09/02 12/13/02

SHEET 544R1 OF

FILE => I:\bb\04-01200I\sas\contract plans and cco\cco\in progress\cco#32\akdoh05.dgn

USERNAME => dwinrow DATE PLOTTED => 21 MAY 2007 TIME PLOTTED => 11:19:31

100 % PS&E