DIST.	COUNTY	ROUTE	KILOMETER POST TOTAL PROJECT	SHEET NO.	TOTAL SHEETS
04	SF	80	13.2/13.9	960R1	1204

Caltrans Metric

George Baker
REGISTERED ENGINEER - CIVIL
1-27-03
PLANS APPROVAL DATE

REGISTERED PROFESSIONAL ENGINEER George S. Baker No. C 57112 Exp. 12/31/05 CIVIL STATE OF CALIFORNIA

The State of California or its officers or agents shall not be responsible for the accuracy or completeness of electronic copies of this plan sheet.

T.Y. LIN / MOFFATT & NICHOL
825 BATTERY STREET
SAN FRANCISCO, CA 94111

To get to the web site, go to: http://www.dot.ca.gov

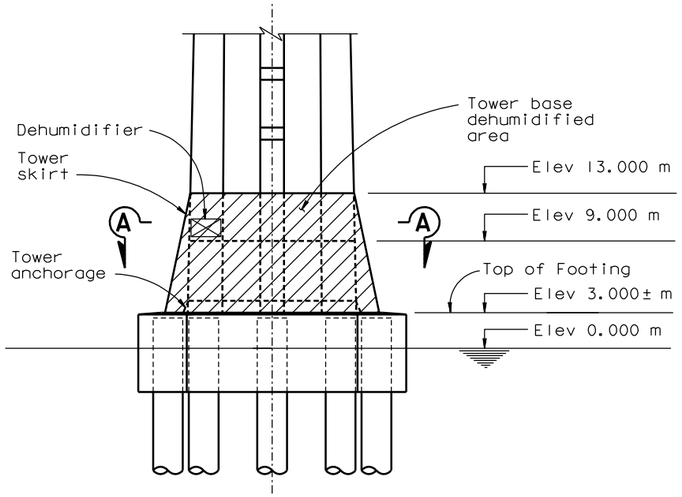

DETAIL B Looking South
1:250

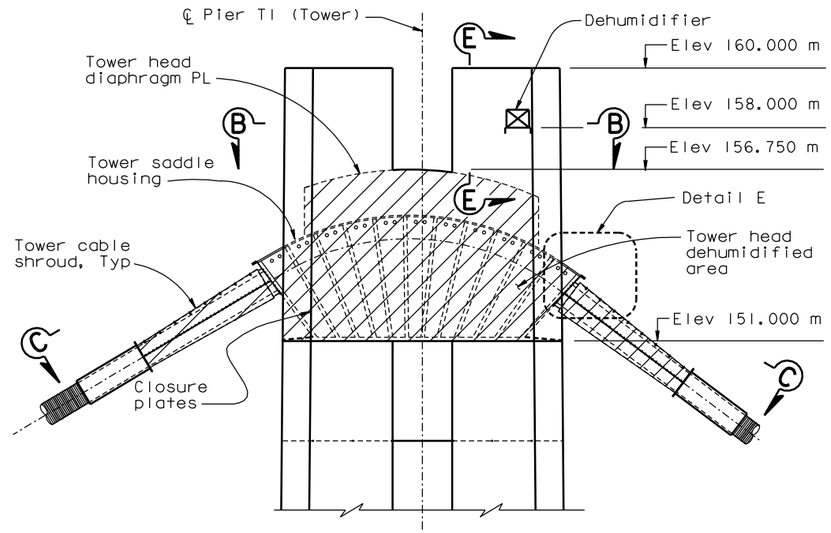

DETAIL C Looking South
1:100

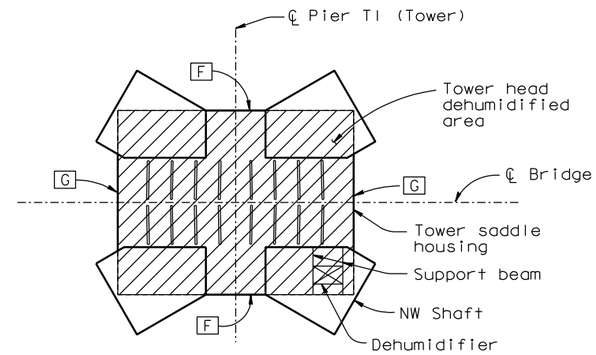

SECTION B-B
1:100

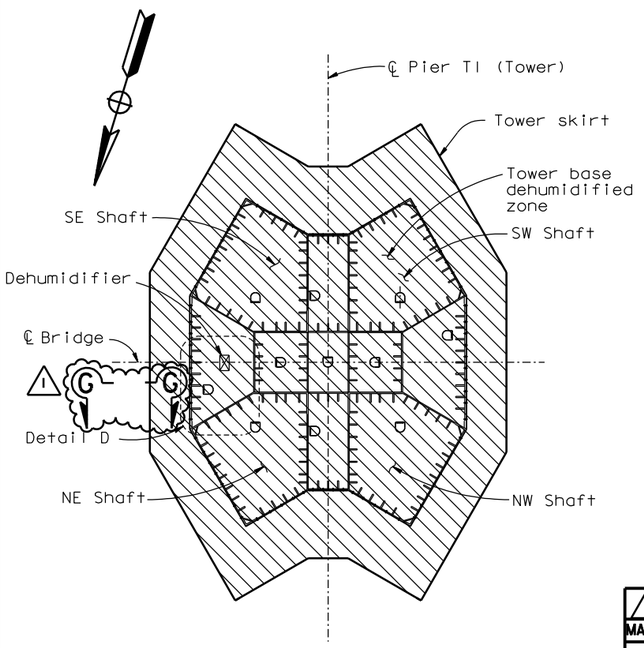

SECTION A-A
1:150

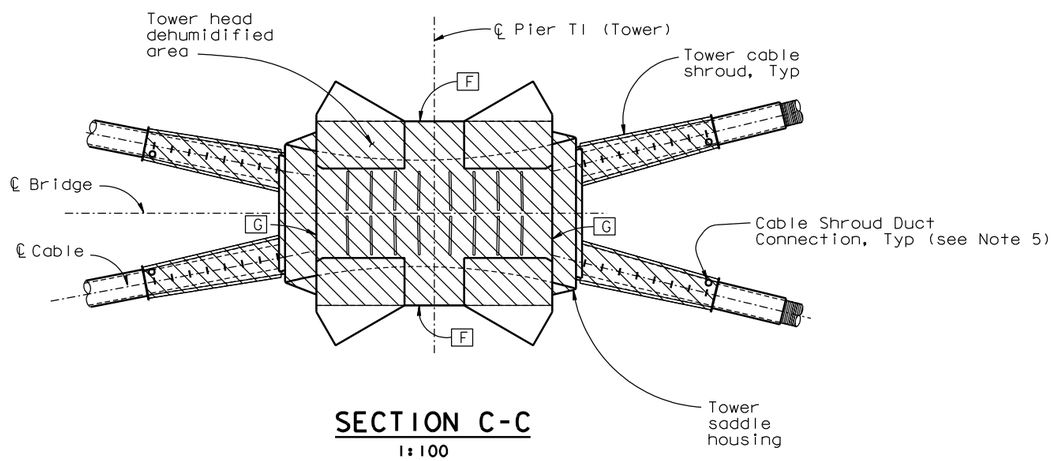

SECTION C-C
1:100

LEGEND:

Limits of dehumidification

Dehumidifier

NOTES:

1. For details of tower head walls F and G, and diaphragm PL, see "Tower Head Details" sheets.
2. For tower saddle housing and closure plates, see "Tower Saddle Housing" sheets.
3. For tower cable shroud details, see "Tower Cable Shroud Details" sheets.
4. (1) For Details D, E and Sections E-E and C-C, see "Dehumidification Support Details No.5" sheet.
5. For Cable Shroud Duct Connection, see "Dehumidification Support Details No.5" sheet.

MARK	DATE	DESCRIPTIONS	BY	CH'D	CCO#
1	05/23/07	DEHUMIDIFICATION SYSTEM	GB	DT	32

REVISIONS

CONTRACT CHANGE ORDER NO. ____
SHEET ___ OF ____

Daniel J. Turner
REGISTERED PROFESSIONAL ENGINEER Daniel J. Turner No. C 65033 Exp. 06/30/07 CIVIL STATE OF CALIFORNIA

FOR REVISIONS ONLY

ALL DIMENSIONS ARE IN MILLIMETERS UNLESS OTHERWISE SHOWN

R. Valizadeh/V. Toan/Y.L./W.L./F.C.
DESIGN OVERSIGHT
Reza Valizadeh / Vong D. Toan / Y. Liu
SIGN OFF DATE 05/23/07

	BY	CHECKED
DESIGN	G. Baker	T. Ho
DETAILS	C. Mauch	T. Ho
QUANTITIES	C. Mauch	D. Harrison

PREPARED FOR THE STATE OF CALIFORNIA DEPARTMENT OF TRANSPORTATION

R. Manzanarez
PROJECT ENGINEER

BRIDGE NO. 34-0006L/R
KILOMETER POST 13.2/13.9

SAN FRANCISCO OAKLAND BAY BRIDGE
EAST SPAN SEISMIC SAFETY PROJECT
SELF-ANCHORED SUSPENSION BRIDGE
(SUPERSTRUCTURE & TOWER)

DEHUMIDIFICATION SUPPORT DETAILS NO. 4

Rev. Date: 5-18-98

ORIGINAL SCALE IN MILLIMETERS FOR REDUCED PLANS 0 10 20 30 40 50 60 70 80 90 100

CU 04
EA 0120F1

DISREGARD PRINTS BEARING EARLIER REVISION DATES

REVISION DATES (PRELIMINARY STAGE ONLY) 04/08/02 07/01/02 12/19/02

SHEET 543R1 OF

FILE => I:\bb\04-012001\sas\contract plans and cco\cco\in progress\cco#32\akdeh04.dgn

100% PS&E

USERNAME => vignotovs DATE PLOTTED => 21 MAY 2007 TIME PLOTTED => 08:36:09