DIST	COUNTY	ROUTE	KILOMETER POST TOTAL PROJECT	SHEET No	TOTAL SHEETS
04	SF	80	13.2/13.9	55R2	1204

Bobby J. Melvin 12/19/2002
REGISTERED MECHANICAL ENGINEER DATE

12-6-04
PLANS APPROVAL DATE

REGISTERED PROFESSIONAL ENGINEER Bobby J. Melvin No. 28685 Exp. 6/30/09 MECHANICAL STATE OF CALIFORNIA

PARSONS BRINCKERHOFF QUADE & DOUGLAS, INC.
303 SECOND STREET, SUITE 700 N
SAN FRANCISCO, CA 94107

The State of California or its officers or agents shall not be responsible for the accuracy or completeness of electronic copies of this plan sheet.

To get to the web site, go to http://www.dot.ca.gov

Caltrans Metric

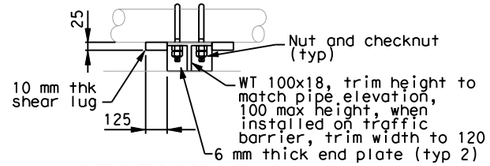

SECTION A-A

Table for PS-8

Pipe	"A"	"B"	"C"
6 NPS Reclaim Water	W250x49x250long	3	16 mm,ASTM A325
10 NPS Sewer	W250x73x355long	1	19 mm,ASTM A325
12 NPS Water	W250x73x355long	1	19 mm,ASTM A325

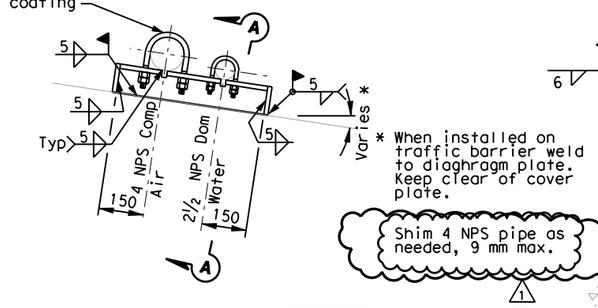

PIPE SUPPORT DETAIL PS-7

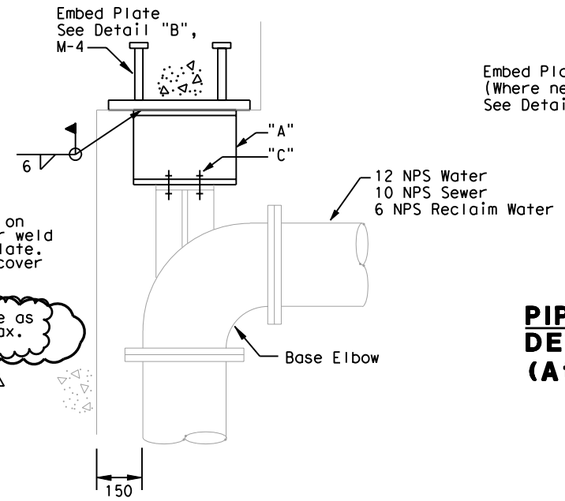

PIPE SUPPORT DETAIL PS-8

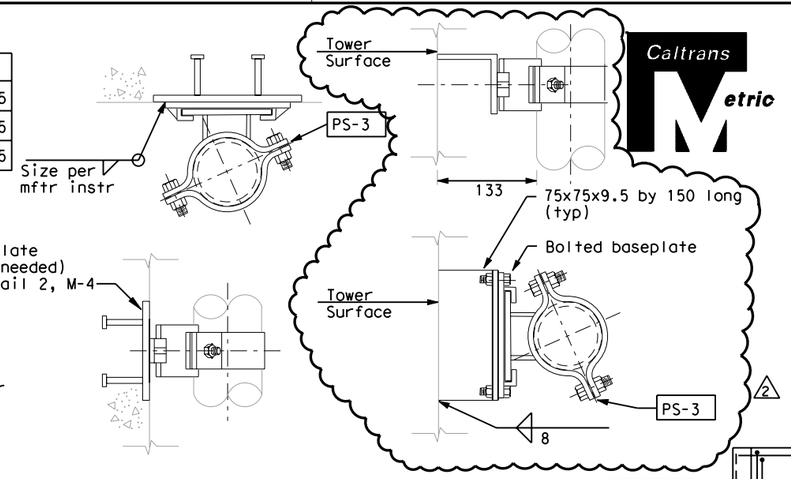

PIPE SUPPORT DETAIL (Attachment to Concrete) PS-9

PIPE SUPPORT DETAIL (Attachment to Tower) PS-9

Table for PS-3 to use with PS-9

Pipe	Vert. Load (kg)	Lat. Load (kg)	Axial Move (mm)
2 NPS	-	30	38
2½ NPS	-	30	38
3 NPS	-	40	38
4 NPS	-	60	38

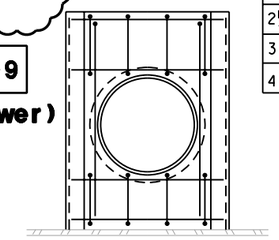

SECTION D-D

East Bound

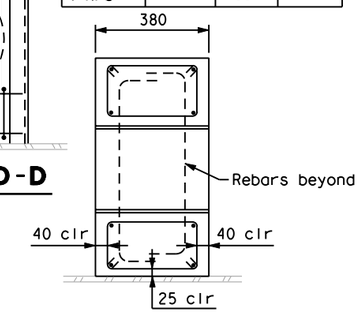

SECTION E-E

Table for PS-10

PIPE	"A"	"B"	"C"	"D"
6 NPS Reclaim Water	W200X36	4	6	19 mm BOLT - ASTM A325
10 NPS Sewer	W200X46	3	6	19 mm BOLT - ASTM A325
12 NPS Water	W200X46	3	6	19 mm BOLT - ASTM A325

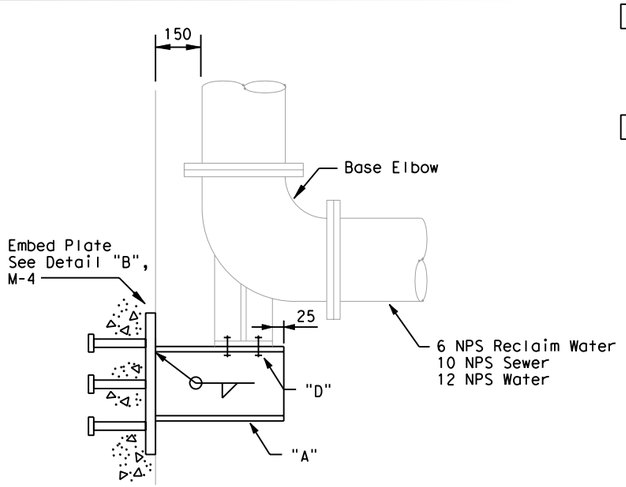

PIPE SUPPORT DETAIL PS-10

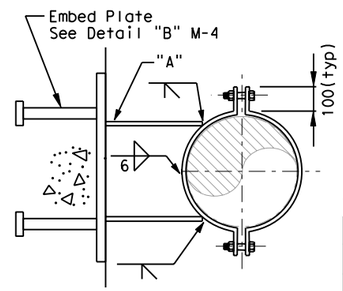

SECTION C-C

Table for PS-11

Pipe	"A"	"B"	"C"
6 NPS Reclaim Water	W150X30	4	13
10 NPS Sewer	W200X46	4	13
12 NPS Water	W200X46	4	13

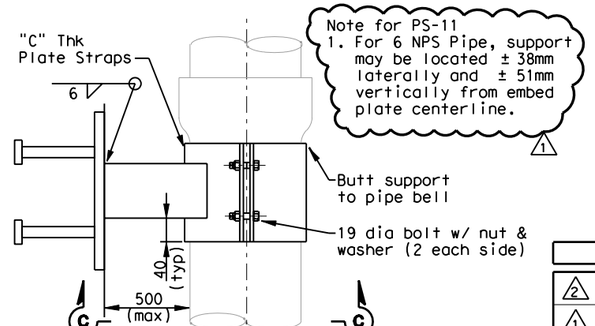

Note for PS-11
1. For 6 NPS Pipe, support may be located ± 38mm laterally and ± 51mm vertically from embed plate centerline.
1

PIPE SUPPORT DETAIL PS-11

Thrust Collar for PS-12

Pipe	Axial Load Rating (kg)
6 NPS	6,000
10 NPS	13,000
12 NPS	18,000

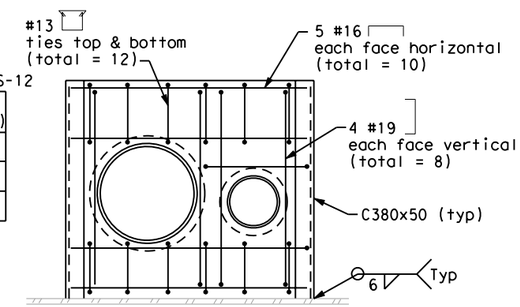

SECTION D-D

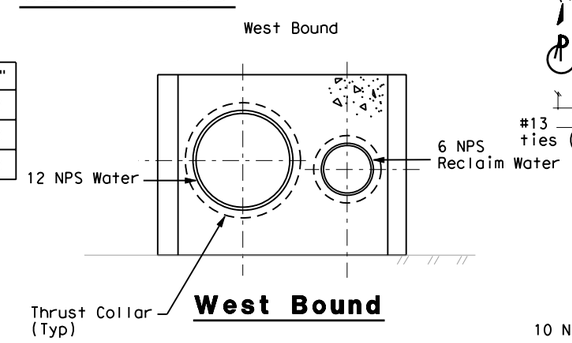

West Bound

PIPE SUPPORT DETAIL PS-12

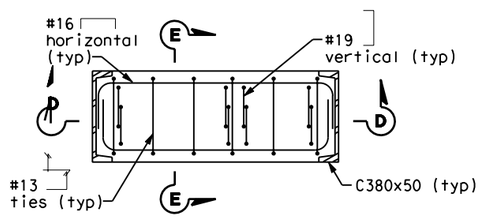

PLAN NEAR TOP

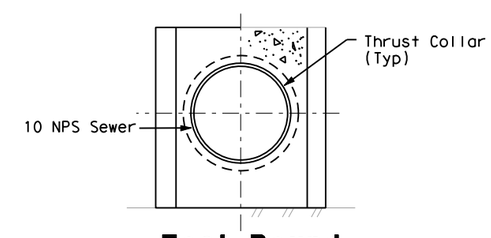

East Bound

REQUEST FOR INFORMATION NOT ADDRESSED IN THIS CCO REMAIN IN FORCE					
2	1/18/08	MECHANICAL MODIFICATIONS	VY	BM	31
1	9/05/07	MECHANICAL MODIFICATIONS	BM	RM	31
MARK	DATE	DESCRIPTIONS	BY	CH'D	CCO#
		REVISIONS			

CONTRACT CHANGE ORDER NO._____
SHEET _____ OF _____

MECHANICAL PIPE SUPPORT DETAILS No. 2

NO SCALE

M-19

ALL DIMENSIONS IN MILLIMETERS UNLESS OTHERWISE SHOWN

CALCULATED/ DESIGNED BY	BM	DATE 10/31/02	REVISED BY
CHECKED BY	KH	11/15/02	DATE REVISED

PROJECT ENGINEER Rich Newell

STATE OF CALIFORNIA - DEPARTMENT OF TRANSPORTATION

Caltrans

LAST REVISION 00-00-00 DATE PLOTTED => 2/26/2008 TIME PLOTTED => 10:18:16 AM

FOR REDUCED PLANS ORIGINAL SCALE IS IN MILLIMETERS 0 20 40 60 80

USERNAME => reyesl
DGN FILE => T:\13103\MS\pse\SAS Struc\CCO\SAS CCO31\ISSUED 1-18-08\04-012011_0055R02.dgn

CU 04251

EA 0120F1