DIST	COUNTY	ROUTE	KILOMETER POST TOTAL PROJECT	SHEET No	TOTAL SHEETS
04	SF	80	13.2/13.9	57R3	1204

Bobby J. Melvin 12/19/2002
REGISTERED MECHANICAL ENGINEER DATE

12-6-04
PLANS APPROVAL DATE

REGISTERED PROFESSIONAL ENGINEER Bobby J. Melvin No. 28585 Exp. 6/30/09 MECHANICAL STATE OF CALIFORNIA

PARSONS BRINCKERHOFF QUADE & DOUGLAS, INC.
303 SECOND STREET, SUITE 700 N
SAN FRANCISCO, CA 94107

The State of California or its officers or agents shall not be responsible for the accuracy or completeness of electronic copies of this plan sheet.

Caltrans now has a web site! To get to the web site, go to http://www.dot.ca.gov

Caltrans Metric

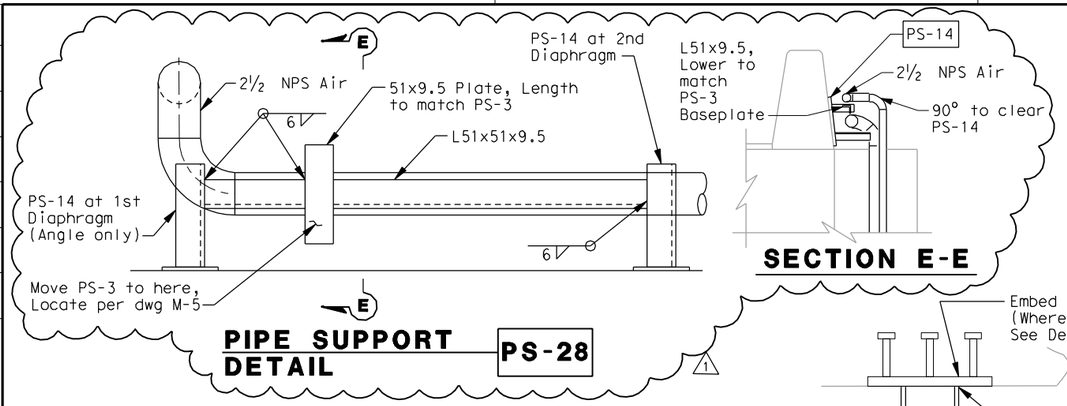

PIPE SUPPORT DETAIL PS-28

SECTION E-E

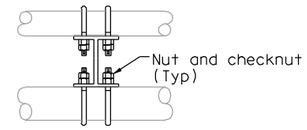

SECTION A-A

Table for PS-3 to be used with PS-21

PIPE	Vert. Load (kg)	Lat. Load (kg)	Axial Move. (mm)
2½ NPS Dom Water	70	45	38
4 NPS Comp Air	130	80	38

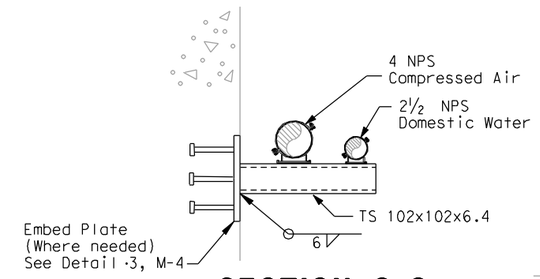

SECTION C-C

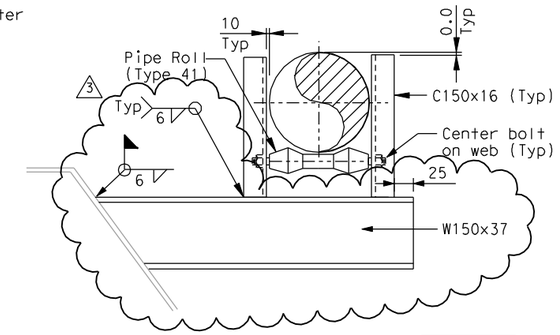

PIPE SUPPORT DETAIL PS-22

Table for PS-3 to be used with PS-19

PIPE	Vert. Load (kg)	Lat. Load (kg)	Axial Load (kg)
2½ NPS Dom Water	70	45	95
4 NPS Comp Air	130	80	190

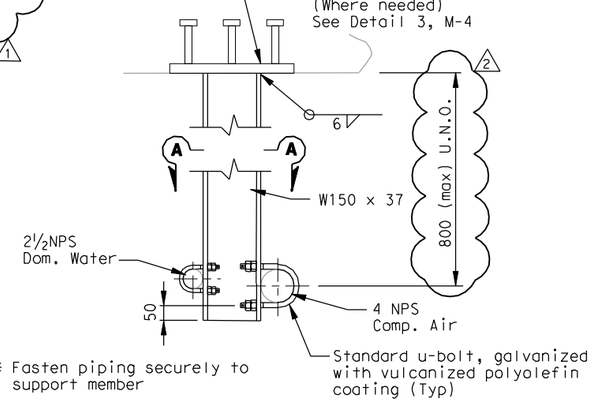

PIPE SUPPORT DETAIL PS-20

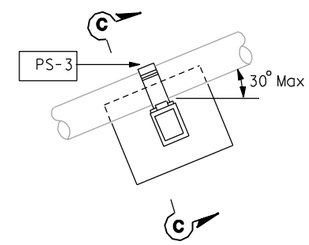

PIPE SUPPORT DETAIL PS-21

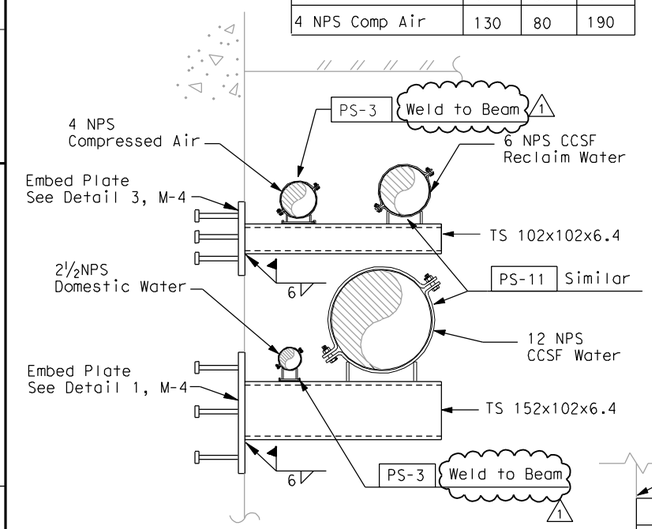

PIPE SUPPORT DETAIL PS-19

Table for PS-25

Pipe Size	Rod Size (mm)	"A"	"B"	"W"	"Y"	Vertical Travel (mm)	Hot Load (kg)	Cold Load (kg)
2 NPS	16	W150x22	50	6	6	25	365	415
3 NPS	19	W150x22	75	6	6	31	545	615

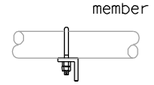

SECTION B-B

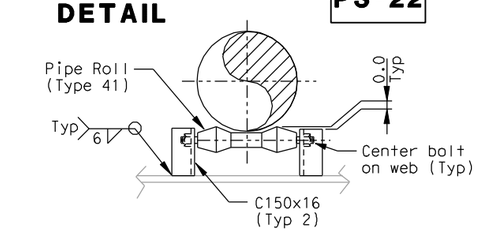

PIPE SUPPORT DETAIL PS-23

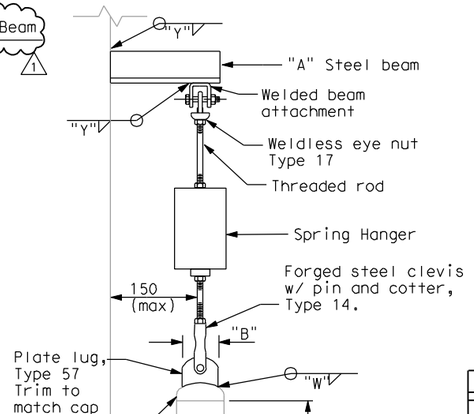

PIPE SUPPORT DETAIL PS-25

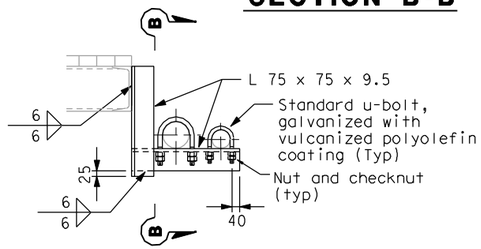

PIPE SUPPORT DETAIL PS-26

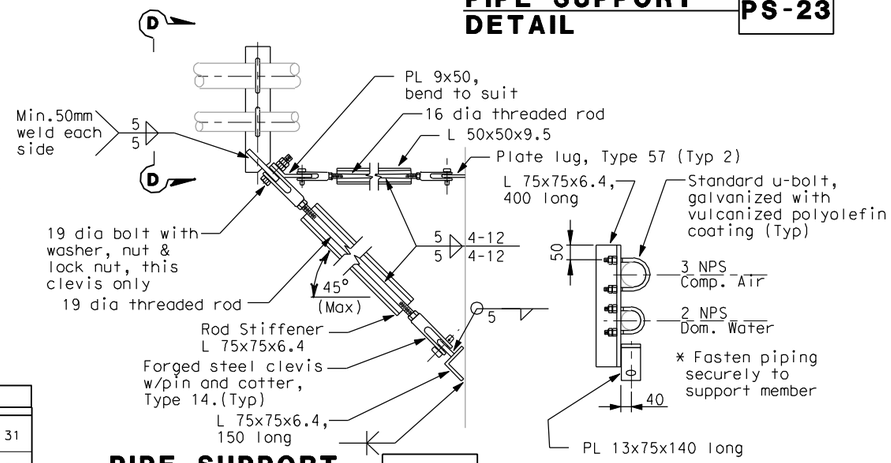

PIPE SUPPORT DETAIL PS-27

SECTION D-D

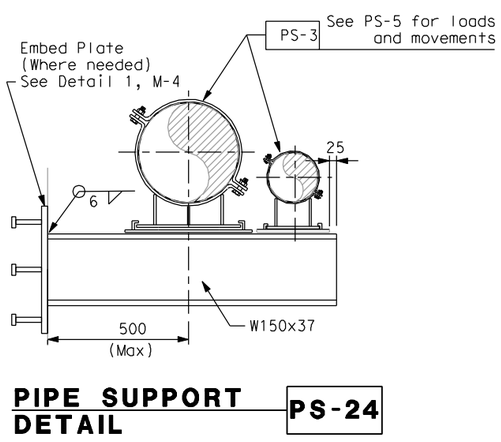

PIPE SUPPORT DETAIL PS-24

MARK	DATE	DESCRIPTIONS	BY	CH'D	CCO#
3	10/6/08	MECHANICAL MODIFICATIONS	CM	BM	31
2	1/18/08	MECHANICAL MODIFICATIONS	VY	BM	31
1	9/05/07	MECHANICAL MODIFICATIONS	BM	RM	31

REQUEST FOR INFORMATION NOT ADDRESSED IN THIS CCO REMAIN IN FORCE

REVISIONS

CONTRACT CHANGE ORDER NO._____
SHEET_____ OF _____

ALL DIMENSIONS IN MILLIMETERS UNLESS OTHERWISE SHOWN

MECHANICAL PIPE SUPPORT DETAILS NO. 4

NO SCALE

M-21

DATE	BM	CALCULATED/ DESIGNED BY	REVISED BY
10/31/02	KH	CHECKED BY	DATE REVISED

PROJECT ENGINEER Rich Newell

STATE OF CALIFORNIA - DEPARTMENT OF TRANSPORTATION

Caltrans

LAST REVISION 00-00-00 DATE PLOTTED => 10/8/2008 TIME PLOTTED => 3:16:40 PM

FOR REDUCED PLANS ORIGINAL SCALE IS IN MILLIMETERS 0 20 40 60 80

USERNAME => reyesl
DGN FILE => T:\13103\MS\pse\SAS Struc\CCO\SAS CCO31\ISSUED 10-06-2008\04-0120f1_0057R03.dgn

CU: 04251 EA 0120F1