DIST	COUNTY	ROUTE	KILOMETER POST TOTAL PROJECT	SHEET No	TOTAL SHEETS
04	SF	80	13.2/13.9	52R2	1204

Bobby J. Melvin 12/19/2002
REGISTERED MECHANICAL ENGINEER DATE

12-6-04
PLANS APPROVAL DATE

REGISTERED PROFESSIONAL ENGINEER Bobby J. Melvin No. 28685 Exp. 6/30/09 MECHANICAL STATE OF CALIFORNIA

PARSONS BRINCKERHOFF QUADE & DOUGLAS, INC.
303 SECOND STREET, SUITE 700 N
SAN FRANCISCO, CA 94107

The State of California or its officers or agents shall not be responsible for the accuracy or completeness of electronic copies of this plan sheet.

To get to the web site, go to http://www.dot.ca.gov

Caltrans Metric

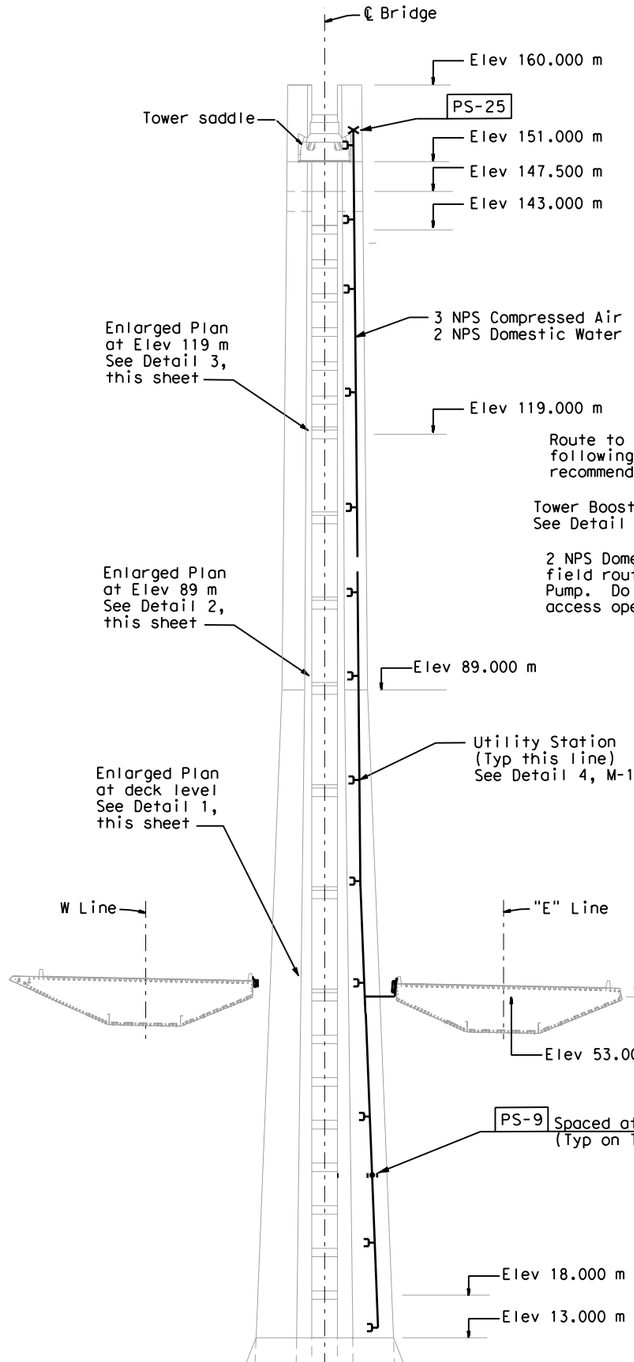

SECTION A-A

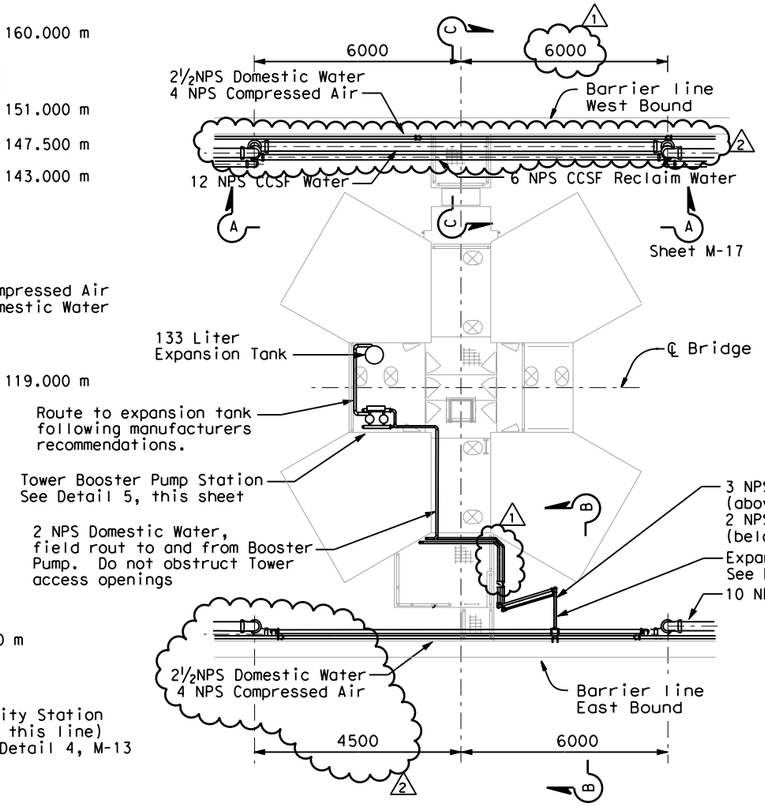

1 DETAIL

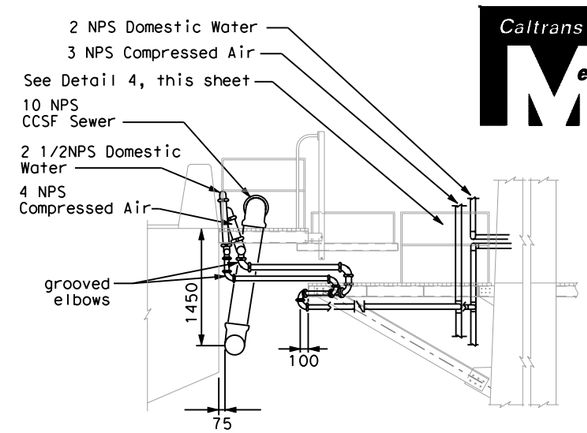

SECTION B-B

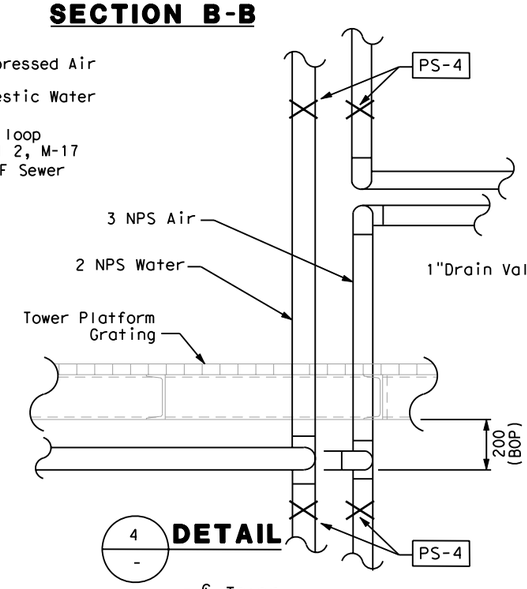

4 DETAIL

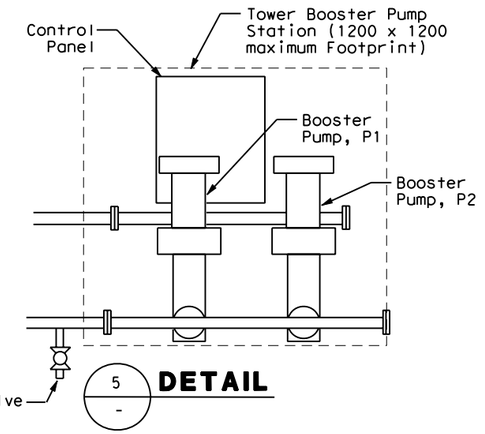

5 DETAIL

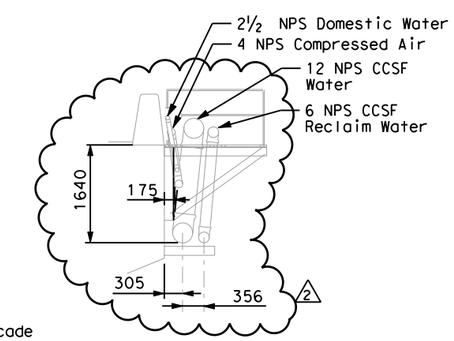

SECTION C-C

NOTE:

1. Provide penetration sleeve thru Strut Facade 1 full pipe size larger than pipe. Extend 25mm beyond Facade and weld all around (Typ Facade Type A)

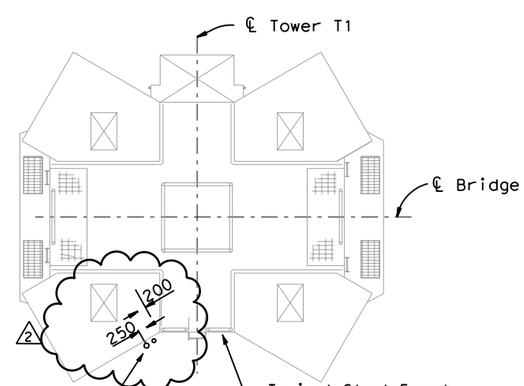

2 DETAIL

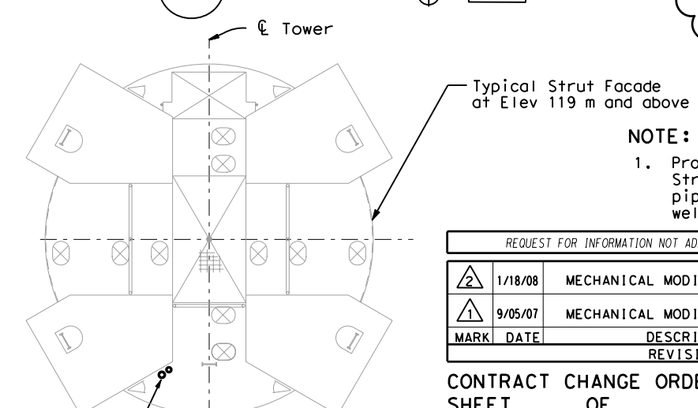

3 DETAIL

REQUEST FOR INFORMATION NOT ADDRESSED IN THIS CCO REMAIN IN FORCE

MARK	DATE	DESCRIPTIONS	BY	CH'D	CCO#
2	1/18/08	MECHANICAL MODIFICATIONS	VY	BM	31
1	9/05/07	MECHANICAL MODIFICATIONS	BM	RM	31

REVISIONS

CONTRACT CHANGE ORDER NO._____
SHEET _____ OF _____

MECHANICAL PIPING SECTIONS AND DETAILS NO. 6

NO SCALE

M-16

ALL DIMENSIONS IN MILLIMETERS UNLESS OTHERWISE SHOWN

DATE	BM	CALCULATED/ DESIGNED BY
10/31/02	KH	CHECKED BY
11/15/02		REVISED BY
		DATE REVISED

PROJECT ENGINEER: Rich Newell

STATE OF CALIFORNIA - DEPARTMENT OF TRANSPORTATION

Caltrans

F:\13103K/DGN/CONTRACT/13103M1016.dgn 6-21-01

FOR REDUCED PLANS ORIGINAL SCALE IS IN MILLIMETERS 0 20 40 60 80

USERNAME => reyesl
DGN FILE => T:\13103\MS\pse\SAS Struc\CCO\SAS CCO31\ISSUED 1-18-08\04_0120F1_0052R02.dgn

CU 04251

EA 0120F1

LAST REVISION 00-00-00

DATE PLOTTED => 2/26/2008
TIME PLOTTED => 10:15:20 AM