| DIST | COUNTY | ROUTE | KILOMETER POST TOTAL PROJECT | SHEET No | TOTAL SHEETS |
|---|---|---|---|---|---|
| 04 | SF | 80 | 13.2/13.9 | 53R2 | 1204 |

Bobby J. Melvin 12/19/2002
REGISTERED MECHANICAL ENGINEER DATE

12-6-04
PLANS APPROVAL DATE

REGISTERED PROFESSIONAL ENGINEER Bobby J. Melvin No. 28685 Exp. 6/30/09 MECHANICAL STATE OF CALIFORNIA

PARSONS BRINCKERHOFF QUADE & DOUGLAS, INC.
303 SECOND STREET, SUITE 700 N
SAN FRANCISCO, CA 94107

*The State of California or its officers or agents shall not be responsible for the accuracy or completeness of electronic copies of this plan sheet.*

*To get to the web site, go to http://www.dot.ca.gov*

Caltrans Metric

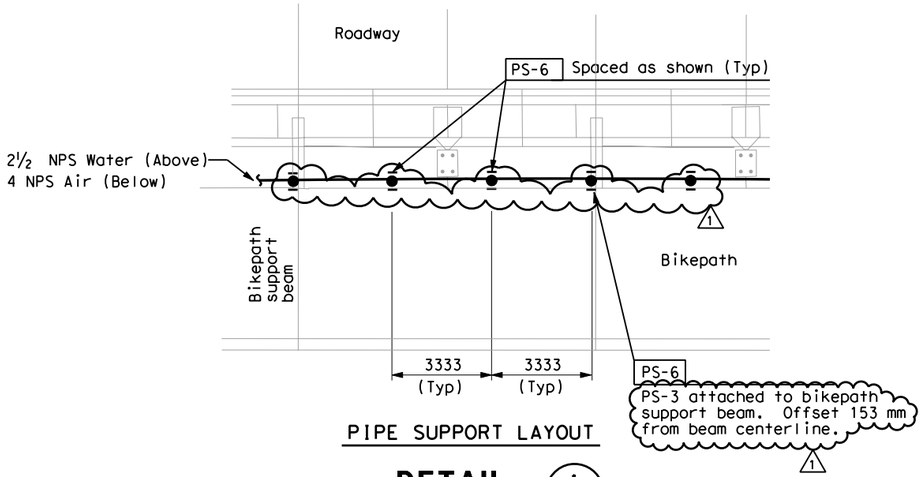


PIPE SUPPORT LAYOUT

**DETAIL** 1 / M-5 thru 10

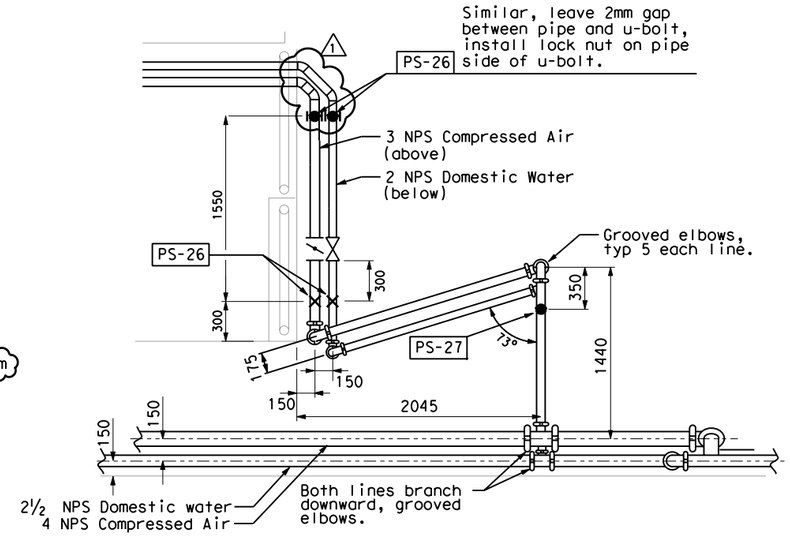


**DETAIL** 2 / M-16

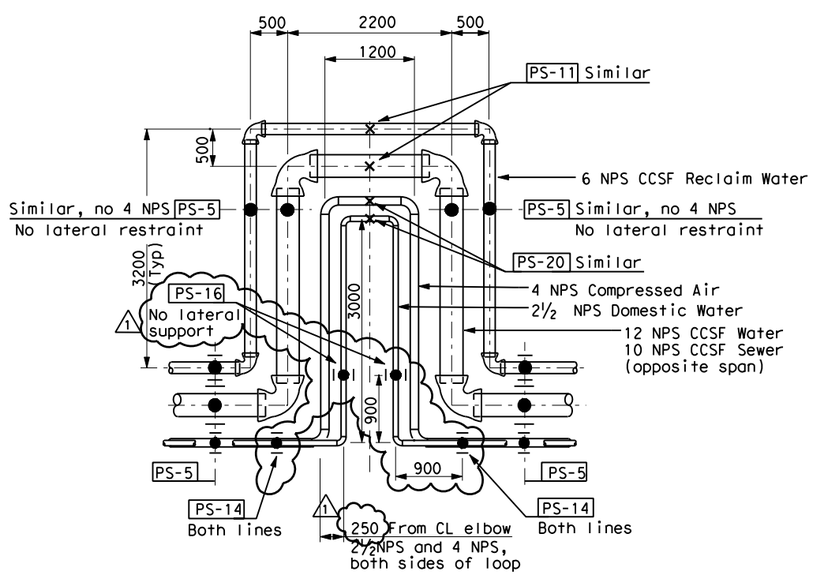


**DETAIL** 3 / M-16
Similar for Eastbound except mirrored

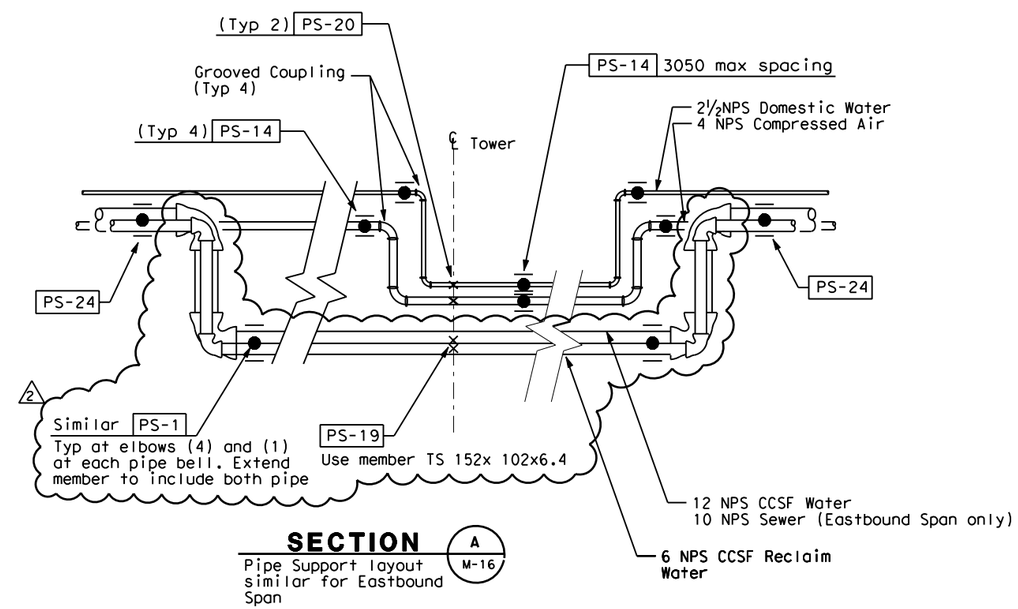


**SECTION** A / M-16
Pipe Support layout similar for Eastbound Span

*REQUEST FOR INFORMATION NOT ADDRESSED IN THIS CCO REMAIN IN FORCE*

| MARK | DATE | DESCRIPTIONS | BY | CH'D | CCO# |
|---|---|---|---|---|---|
| 2 | 1/18/08 | MECHANICAL MODIFICATIONS | VY | BM | 31 |
| 1 | 9/05/07 | MECHANICAL MODIFICATIONS | BM | RM | 31 |

REVISIONS

CONTRACT CHANGE ORDER NO._____
SHEET _____ OF _____

# MECHANICAL PIPING
## SECTIONS & DETAILS
## NO.7
NO SCALE

**M-17**

| DATE | REVISED BY | DATE | REVISED BY |
|---|---|---|---|
| 10/31/02 | BM | 11/15/02 | KH |

CALCULATED/DESIGNED BY
CHECKED BY

PROJECT ENGINEER Rich Newell

STATE OF CALIFORNIA - DEPARTMENT OF TRANSPORTATION
Caltrans

LAST REVISION 00-00-00
DATE PLOTTED => 2/26/2008
TIME PLOTTED => 10:15:56 AM

FOR REDUCED PLANS ORIGINAL SCALE IS IN MILLIMETERS 0 20 40 60 80

USERNAME => reyesl
DGN FILE => T:\13103\MS\pse\SAS Struc\CCO\SAS CCO31\ISSUED 1-18-08\04-012011_0053R02.dgn

CU 04251

EA 0120F1