DIST	COUNTY	ROUTE	KILOMETER POST TOTAL PROJECT	SHEET No	TOTAL SHEETS
04	SF	80	13.2/13.9	56R1	1204

Bobby J. Melvin 12/19/2002
REGISTERED MECHANICAL ENGINEER DATE

12-6-04
PLANS APPROVAL DATE

REGISTERED PROFESSIONAL ENGINEER Bobby J. Melvin No. 28685 Exp. 6/30/09 MECHANICAL STATE OF CALIFORNIA

PARSONS BRINCKERHOFF QUADE & DOUGLAS, INC.
303 SECOND STREET, SUITE 700 N
SAN FRANCISCO, CA 94107

The State of California or its officers or agents shall not be responsible for the accuracy or completeness of electronic copies of this plan sheet.

Caltrans now has a web site! To get to the web site, go to http://www.dot.ca.gov

Caltrans Metric

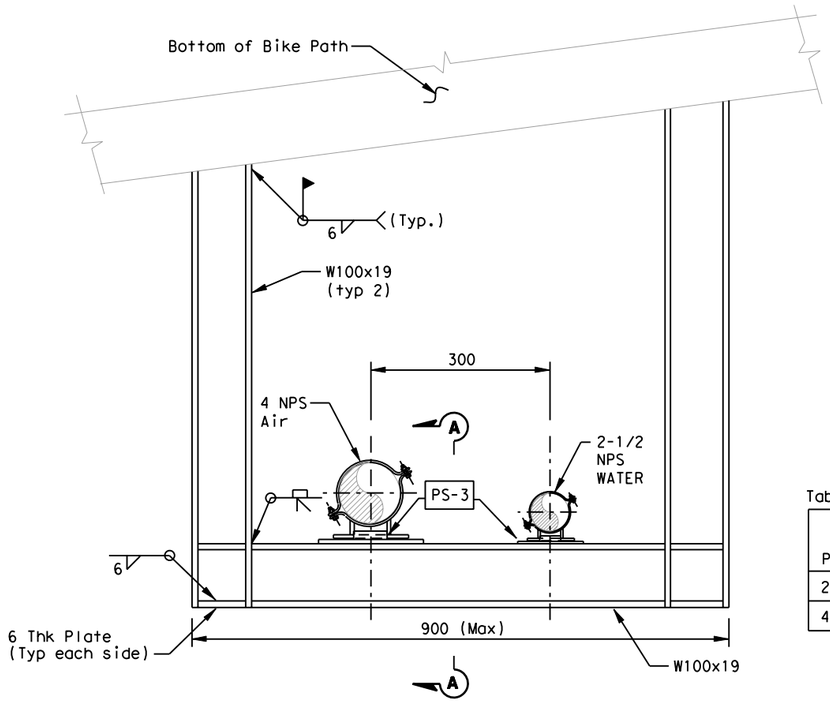

PIPE SUPPORT DETAIL PS-13

Table for PS-3 to be used with PS-14

PIPE	Vert. Load (kg)	Lat. Load (kg)	Axial Move. (mm)
2½ NPS Water	70	45	±38
4 NPS Air	130	80	±38

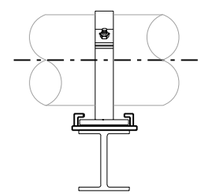

SECTION A-A

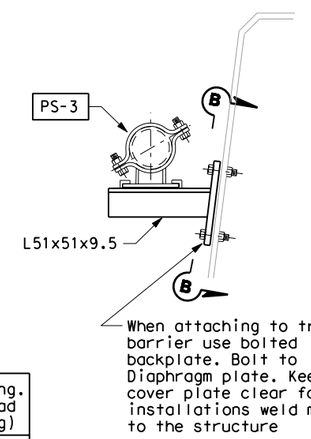

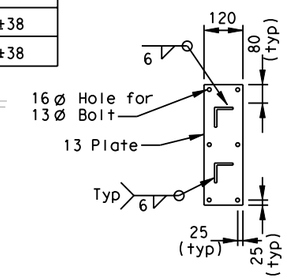

FOR TWO PIPES

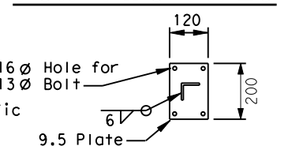

SECTION B-B

Table for PS-3 to be used with PS-13

PIPE	BOP	Vert. Load (kg)	Long. Load (kg)
2-1/2 NPS Water	75	80	45
4 NPS Water	25	145	85

PIPE SUPPORT DETAIL PS-14

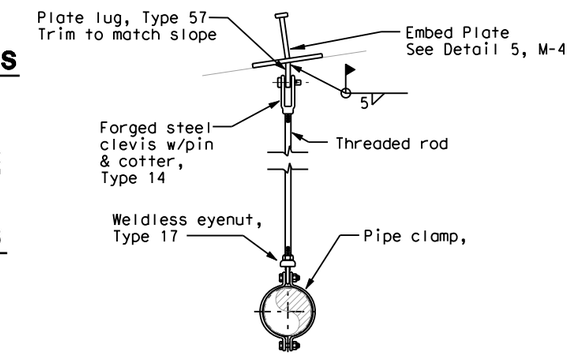

PIPE SUPPORT DETAIL PS-15

Table for PS-3 to be used with PS-17

PIPE	Vert. Load (kg)	Lat. Load (kg)	Axial Move. (mm)
2½ NPS Dom Water	70	73	25
4 NPS Comp Air	130	140	25
	340	340	25
10 NPS Sewer ~~6 NPS Sewer~~ 12 NPS Water	650 900	720 1000	25 25

Table for PS-3 to be used with PS-18

PIPE	Vert. Load (kg)	Lat. Load (kg)	Axial Move. (mm)
2½ NPS Dom Water	70	45	25
4 NPS Comp Air	130	80	25
6 NPS Sewer	340	160	25
10 NPS Sewer	650	340	25
12 NPS Water	900	500	25

Table for PS-3 to be used with PS-16

PIPE	Vert. Load (kg)	Long. Load (kg)	Lat Move. (mm)
2 NPS Water	50	50	38
2-1/2 NPS Water	70	70	38
3 NPS Air	90	70	38
4 NPS Air	130	130	38

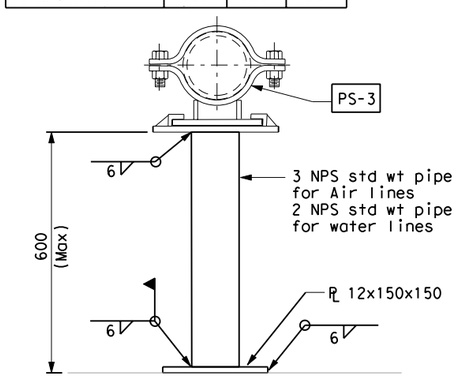

PIPE SUPPORT DETAIL PS-16

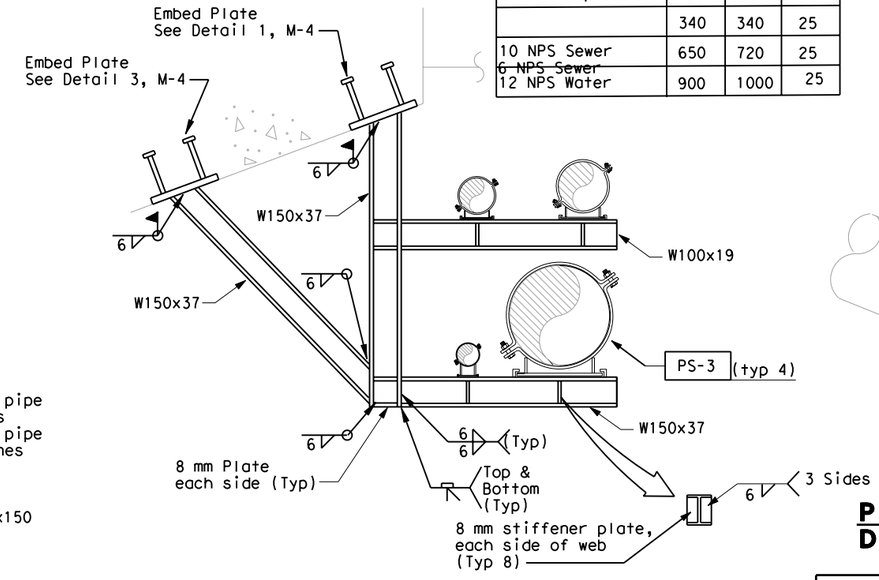

PIPE SUPPORT DETAIL PS-17

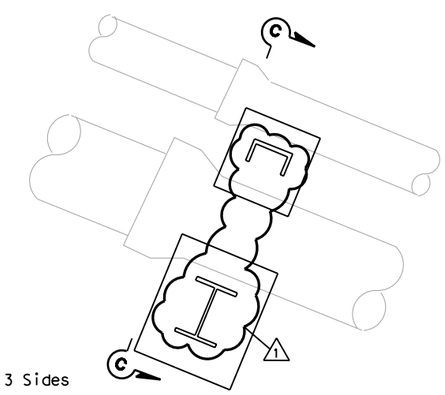

PIPE SUPPORT DETAIL PS-18

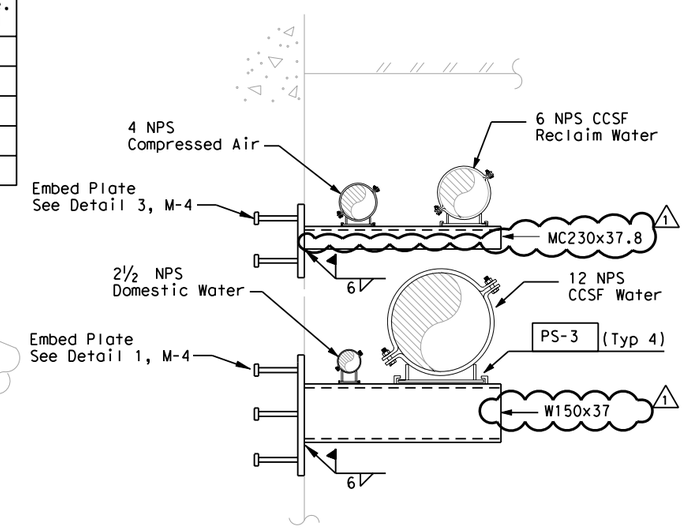

SECTION C-C

MARK	DATE	REVISIONS	BY	CH'D	CCO#
1	9/05/07	MECHANICAL MODIFICATIONS	BM	RM	31

REQUEST FOR INFORMATION NOT ADDRESSED IN THIS CCO REMAIN IN FORCE

CONTRACT CHANGE ORDER NO. _____
SHEET _____ OF _____

ALL DIMENSIONS IN MILLIMETERS UNLESS OTHERWISE SHOWN

MECHANICAL PIPE SUPPORT DETAILS NO. 3

NO SCALE

M-20

DATE	BY	REVISED BY	DATE REVISED
10/31/02	BM		
11/15/02	KH		

CALCULATED/DESIGNED BY BM
CHECKED BY KH

PROJECT ENGINEER Rich Newell

STATE OF CALIFORNIA - DEPARTMENT OF TRANSPORTATION
Caltrans

LAST REVISION 00-00-00
DATE PLOTTED => 2/26/2008
TIME PLOTTED => 11:14:20 AM

FOR REDUCED PLANS ORIGINAL SCALE IS IN MILLIMETERS 0 20 40 60 80

USERNAME => reyesl
DGN FILE => T:\13103\MS\pse\SAS Struc\CCO\SAS CCO31\ISSUED 2-25-08\04-012011_0056R01.dgn

CU 04251

EA 012OF1