DIST	COUNTY	ROUTE	KILOMETER POST TOTAL PROJECT	SHEET No	TOTAL SHEETS
04	SF	80	13.2/13.9	55R2	1204

Bobby J. Melvin 12/19/2002
REGISTERED MECHANICAL ENGINEER DATE

12-6-04
PLANS APPROVAL DATE

REGISTERED PROFESSIONAL ENGINEER Bobby J. Melvin No. 28685 Exp. 6/30/09 MECHANICAL STATE OF CALIFORNIA

PARSONS BRINCKERHOFF QUADE & DOUGLAS, INC.
303 SECOND STREET, SUITE 700 N
SAN FRANCISCO, CA 94107

The State of California or its officers or agents shall not be responsible for the accuracy or completeness of electronic copies of this plan sheet.

To get to the web site, go to http://www.dot.ca.gov

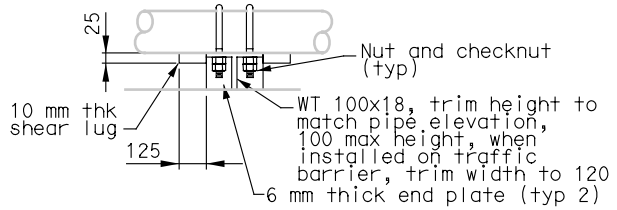

SECTION A-A

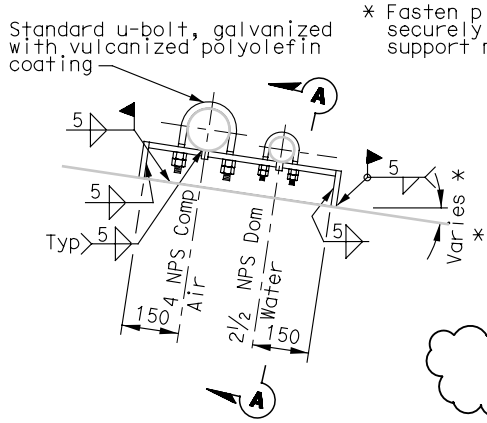

PIPE SUPPORT DETAIL PS-7

Table for PS-8

Pipe	"A"	"B"	"C"
6 NPS Reclaim Water	W250x49x250long	3	16 mm,ASTM A325
10 NPS Sewer	W250x73x355long	1	19 mm,ASTM A325
12 NPS Water	W250x73x355long	1	19 mm,ASTM A325

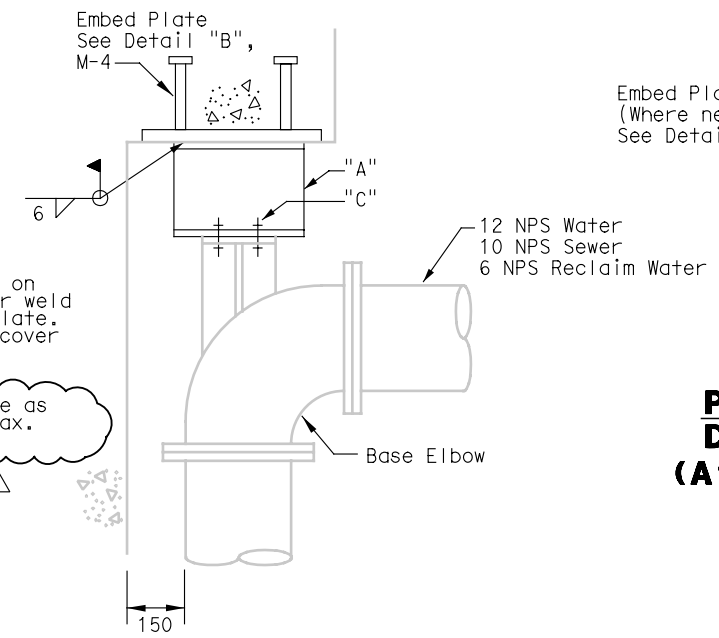

PIPE SUPPORT DETAIL PS-8

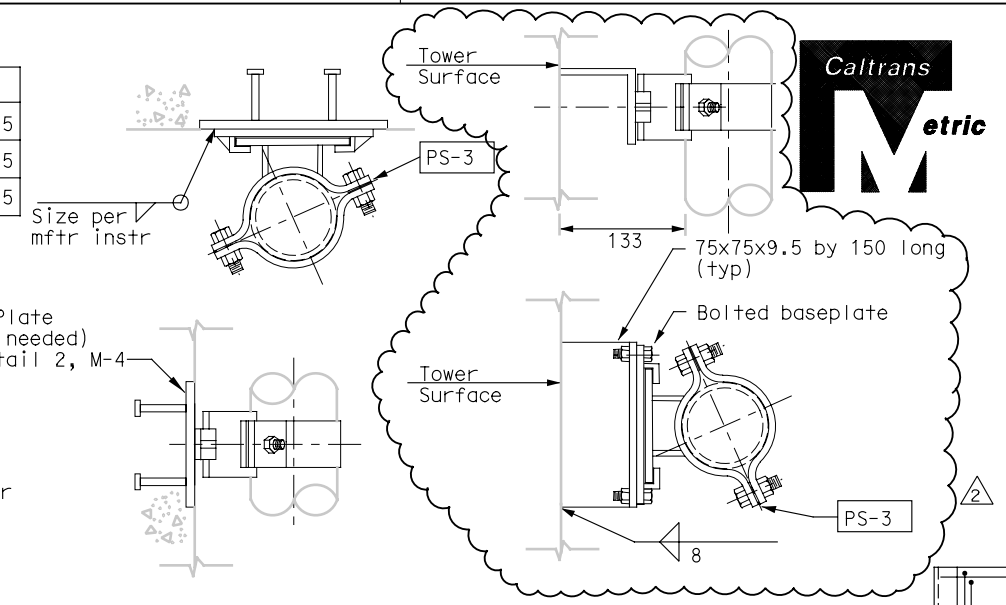

PIPE SUPPORT DETAIL PS-9 (Attachment to Concrete)

PIPE SUPPORT DETAIL PS-9 (Attachment to Tower)

Table for PS-3 to use with PS-9

Pipe	Vert. Load (kg)	Lat. Load (kg)	Axial Move (mm)
2 NPS	-	30	38
2½ NPS	-	30	38
3 NPS	-	40	38
4 NPS	-	60	38

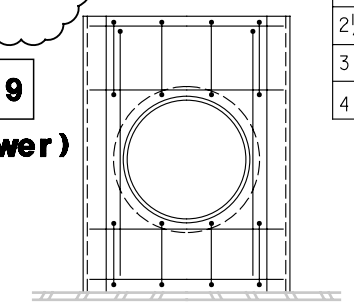

SECTION D-D

East Bound

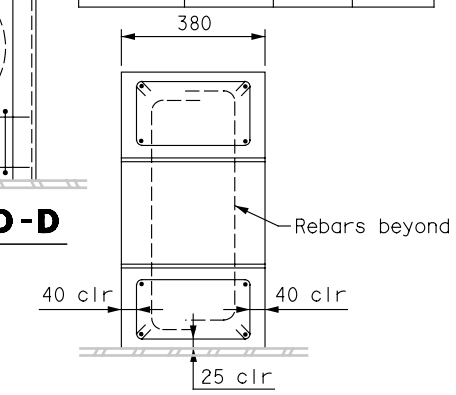

SECTION E-E

Table for PS-10

PIPE	"A"	"B"	"C"	"D"
6 NPS Reclaim Water	W200X36	4	6	19 mm BOLT - ASTM A325
10 NPS Sewer	W200X46	3	6	19 mm BOLT - ASTM A325
12 NPS Water	W200X46	3	6	19 mm BOLT - ASTM A325

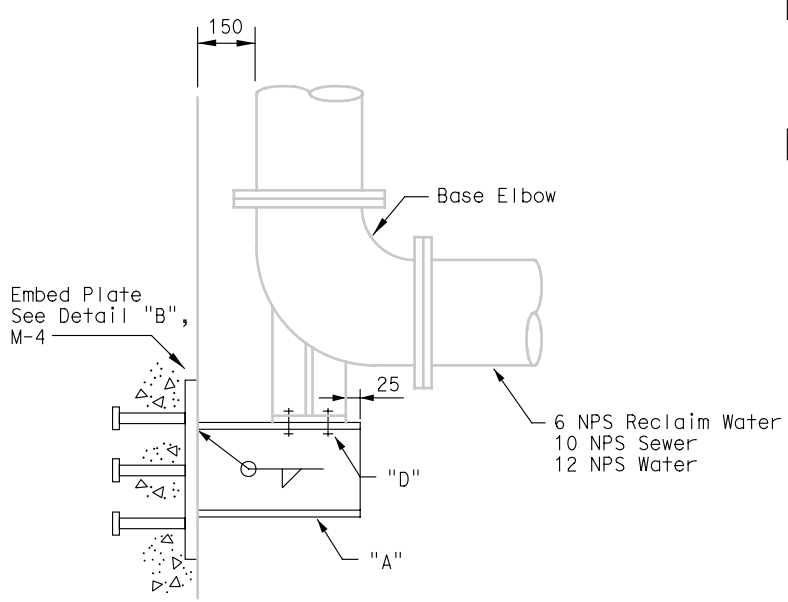

PIPE SUPPORT DETAIL PS-10

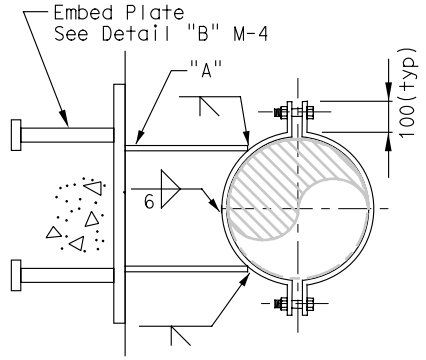

SECTION C-C

Table for PS-11

Pipe	"A"	"B"	"C"
6 NPS Reclaim Water	W150X30	4	13
10 NPS Sewer	W200X46	4	13
12 NPS Water	W200X46	4	13

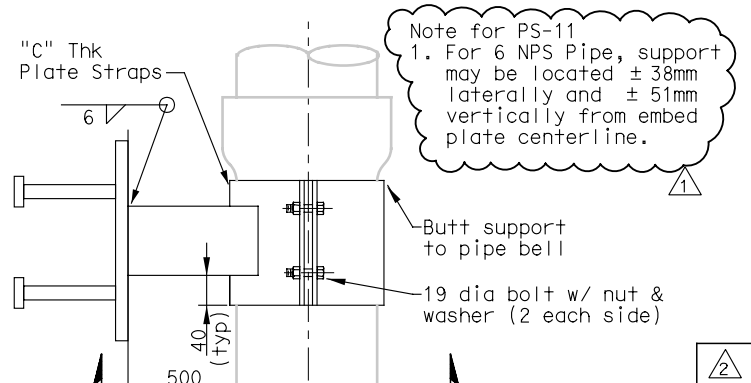

Note for PS-11
1. For 6 NPS Pipe, support may be located ± 38mm laterally and ± 51mm vertically from embed plate centerline.
1

PIPE SUPPORT DETAIL PS-11

Thrust Collar for PS-12

Pipe	Axial Load Rating (kg)
6 NPS	6,000
10 NPS	13,000
12 NPS	18,000

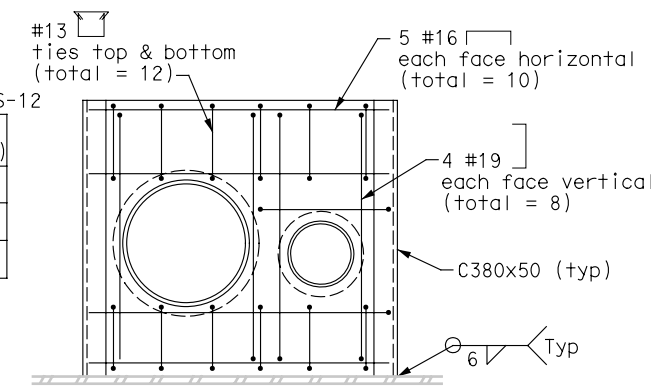

SECTION D-D

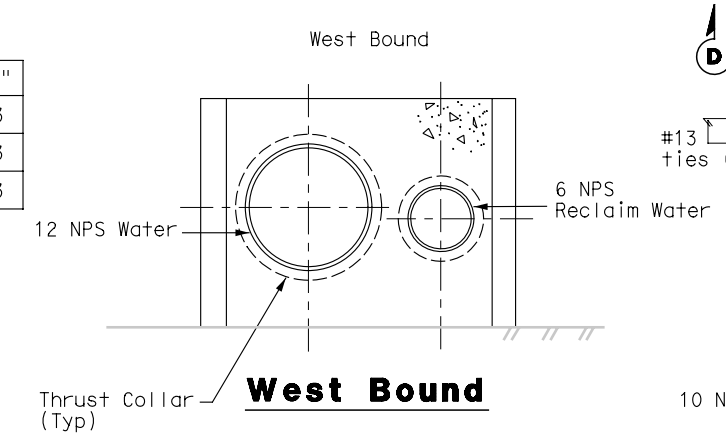

West Bound

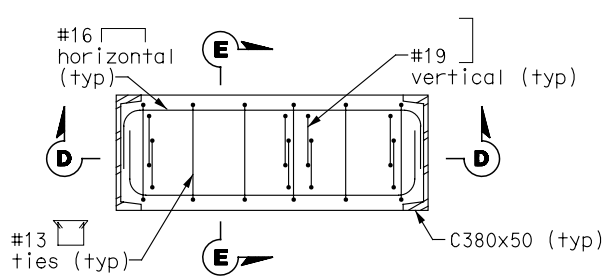

PLAN NEAR TOP

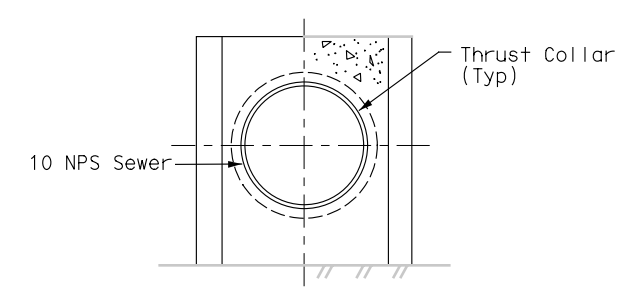

East Bound

MARK	DATE	DESCRIPTIONS	BY	CK	CCO
2	1/18/08	Mechanical Modifications	VY	BM	31
1	9/05/07	Mechanical Modifications	BM	RM	31

REVISIONS

CONTRACT CHANGE ORDER NO. 31
SHEET ____ OF ____

MECHANICAL PIPE SUPPORT DETAILS No. 2

NO SCALE

M-19

ALL DIMENSIONS IN MILLIMETERS UNLESS OTHERWISE SHOWN

DATE	REVISED BY	DATE	REVISED BY
10/31/02	BM	11/15/02	KH

CALCULATED/DESIGNED BY — CHECKED BY

PROJECT ENGINEER Rich Newell

STATE OF CALIFORNIA - DEPARTMENT OF TRANSPORTATION

Caltrans

FOR REDUCED PLANS ORIGINAL SCALE IS IN MILLIMETERS 0 20 40 60 80

USERNAME => antonio
DGN FILE => T:\13103\MS\pse\SAS Struc\CCO\SAS CCO31\ISSUED 1-18-08\04-012011_0055R02.dgn

CU 04251

EA 0120F1

LAST REVISION 00-00-00

DATE PLOTTED => 2/4/2008
TIME PLOTTED => 7:54:24 AM