DIST	COUNTY	ROUTE	KILOMETER POST TOTAL PROJECT	SHEET No	TOTAL SHEETS
04	SF	80	13.2/13.9	54R1	1204

REGISTERED MECHANICAL ENGINEER — DATE 12/19/2002

12-6-04
PLANS APPROVAL DATE

REGISTERED PROFESSIONAL ENGINEER — Bobby J. Melvin — No. 28685 — Exp. 6/30/09 — MECHANICAL — STATE OF CALIFORNIA

PARSONS BRINCKERHOFF QUADE & DOUGLAS, INC.
303 SECOND STREET, SUITE 700 N
SAN FRANCISCO, CA 94107

The State of California or its officers or agents shall not be responsible for the accuracy or completeness of electronic copies of this plan sheet.

To get to the web site, go to http://www.dot.ca.gov

Caltrans Metric

Table for PS-1

PIPE	"A"	"B"	"C"	Values for PS-3 Vert. (kg)	Lat. (kg)	Move. (mm)
2½NPS Water	W150X22	2	6	70	45	±38
4 NPS Air	W150X22	2	6	130	80	±38
6 NPS Water	W150X30	3	6	450	200	±38
10 NPS Sewer	W150X30	3	6	1000	440	±38
12 NPS Water	W150X30	3	6	1300	600	±38

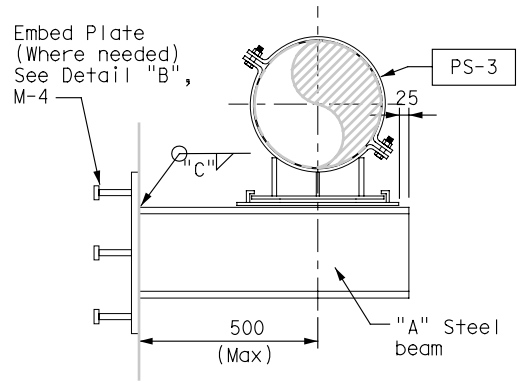

PIPE SUPPORT DETAIL PS-1

Table for PS-2

PIPE SIZE	ROD STIFFENER SIZE	ROD SIZE	CLAMP RATING (KG)	MIN. CLAMP WIDTH	"W"	"Y"	"A"	"B"
6 NPS	L 50X50X9.5	16	600	65	6	4-12	2	2
10,12 NPS	L 75X75X6.4	19	1230	80	6	4-12	2	2

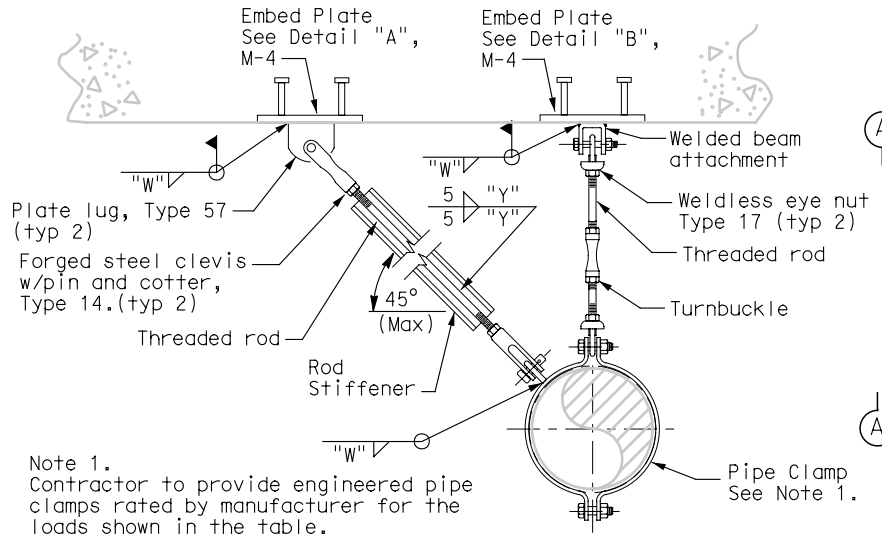

Note 1.
Contractor to provide engineered pipe clamps rated by manufacturer for the loads shown in the table.

PIPE SUPPORT DETAIL PS-2

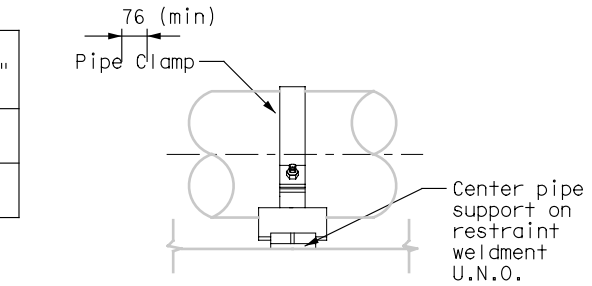

SECTION A-A

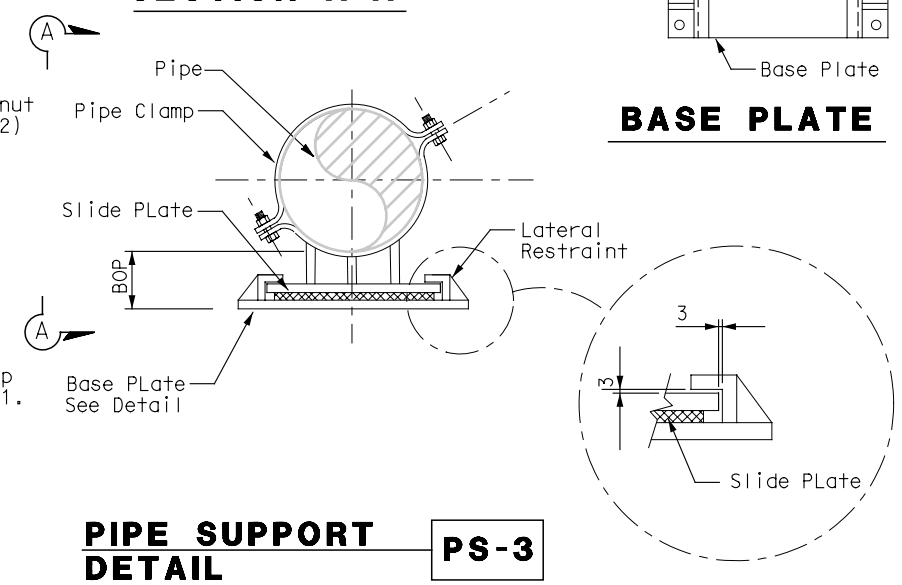

PIPE SUPPORT DETAIL PS-3

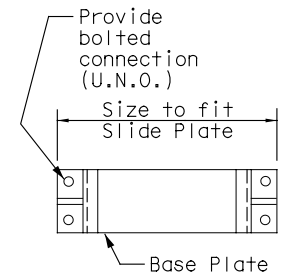

BASE PLATE

MARK	DATE	DESCRIPTIONS	BY	CK	CCO
1	9/05/07	Mechanical Modifications	BM	RM	31

REVISIONS

CONTRACT CHANGE ORDER NO. 31
SHEET ____ OF ____

Table for PS-3 to be used with PS-5

PIPE	Vert. Load (kg)	Lat. Load (kg)	Axial Move. (mm)
4 NPS Air	130	80	±38
6 NPS Water	450	200	±38
10 NPS Sewer	1000	440	±38
12 NPS Water	1300	600	±38

NOTES FOR PS-3

1. Contractor to provide engineered supports rated by manufacturer for the loads and movements shown in the details.
2. Support configuration shown is intended to illustrate general form of support. Actual configurations may vary depending on manufacturer, loads and movements.
3. Slide pads shall be Teflon or Ultra-HDPE running on a stainless steel plate.
4. Submit product data for each support. Each support shall be identified by a unique support model number corresponding to performance data from the manufacturer.
5. Pipe support loads act on pipe centerline.
6. Slide plates not required on supports for piping 6 NPS and smaller.
7. Minimum clamp width for use with ductile iron pipe = 75 mm U.N.O.

GENERAL NOTES FOR PIPE SUPPORTS

1. For piping outside of bridge girder, all steel surfaces of pipe supports and components shall be hot dip galvanized except supplementary steel members attached to bridge structure and components requiring field welding. Pipe supports inside bridge girder shall be painted.
2. All manufactured support components shall be load rated by manufacturer.
3. Expand all grooved and restrained joint couplings prior to setting pipe clamp locations.
4. All supports shall meet the requirements of applicable MSS Standards
5. Provide all necessary nuts, bolts, pins washers etc. to complete pipe support assemblies.
6. Holes for bolts, pins etc. shall not be torch cut unless approved by engineer.
7. All welding for pipe supports shall be per project welding specification and vendor instructions.
8. "Type" Designation for manufactured hanger components refers to MSS-SP69.
9. Support components welded to embed plates shall be centered on embed plates, U.N.O.
10. For embed plate details see drawing M-4.
11. Maintain minimum 200 mm clearance between pipe rolls and piping obstructions, ie; pipe bells, welds, branches etc.
12. Pipe supports shall not be field welded to steel box girder. All welding to girders shall be shop weld.

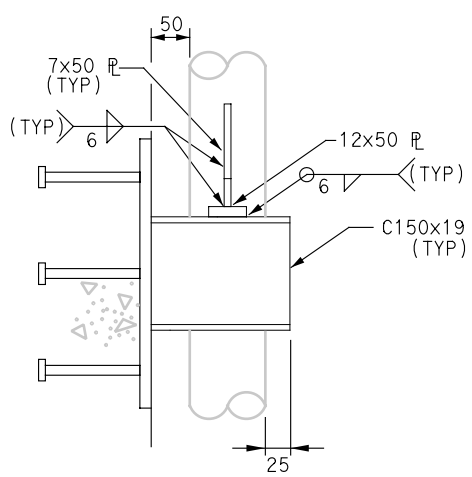

SECTION C-C

Table for PS-6

Pipe	"A"	Data for PS-3 Vert. Load (kg)	Lat. Load (kg)	Axial Move (mm)
2½ NPS	L51x51x7.9	50	25	38
4 NPS	C75x6	110	55	38

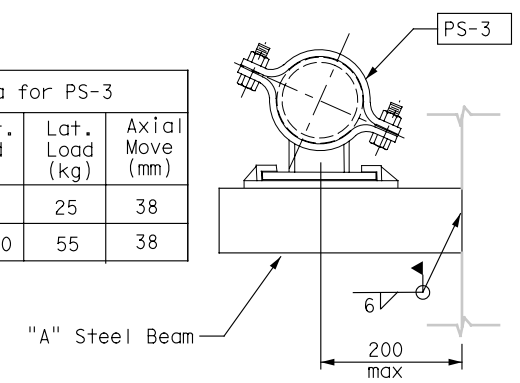

PIPE SUPPORT DETAIL PS-6

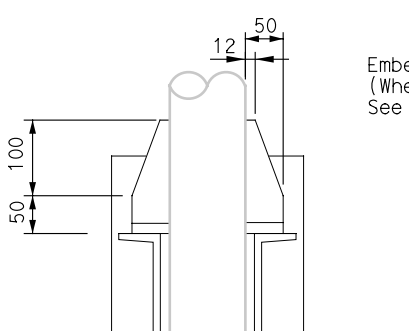

SECTION B-B

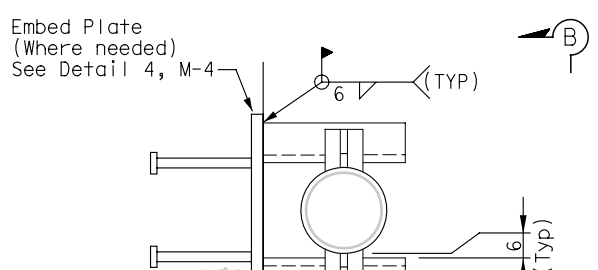

PIPE SUPPORT DETAIL PS-4

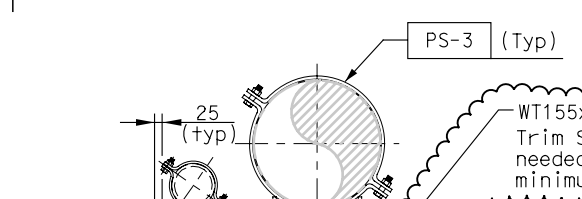

EASTBOUND

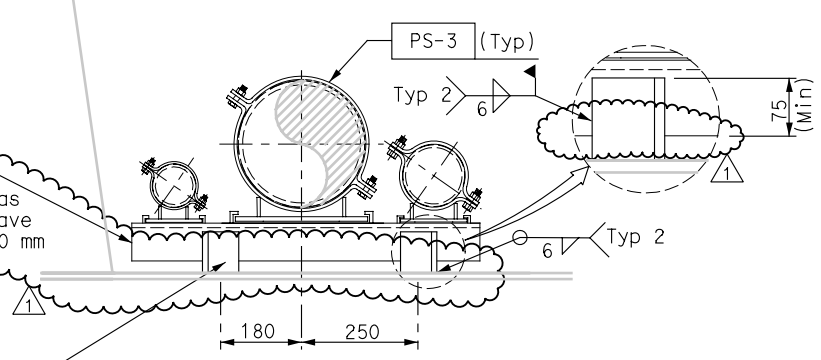

WESTBOUND

PIPE SUPPORT DETAIL PS-5

ALL DIMENSIONS IN MILLIMETERS UNLESS OTHERWISE SHOWN

MECHANICAL PIPE SUPPORT DETAILS NO. 1

NO SCALE

M-18

STATE OF CALIFORNIA - DEPARTMENT OF TRANSPORTATION — Caltrans

PROJECT ENGINEER: Rich Newell

CALCULATED/DESIGNED BY	DATE	REVISED BY	DATE REVISED
BM	10/31/02	KH	11/15/02
CHECKED BY			

LAST REVISION 00-00-00 — DATE PLOTTED => 1/22/2008 — TIME PLOTTED => 3:17:59 PM

FOR REDUCED PLANS ORIGINAL SCALE IS IN MILLIMETERS 0 20 40 60 80

USERNAME => antonio
DGN FILE => t:\13103\ms\pse\sas struc\cco\sas cco31\04-0120f1_0054r01.dgn

CU 04251 — EA 0120F1