DIST	COUNTY	ROUTE	KILOMETER POST TOTAL PROJECT	SHEET No	TOTAL SHEETS
04	SF	80	13.2/13.9	51R2	1204

Bobby J. Melvin 12/19/2002
REGISTERED MECHANICAL ENGINEER DATE

12-6-04
PLANS APPROVAL DATE

REGISTERED PROFESSIONAL ENGINEER Bobby J. Melvin No. 28685 Exp. 6/30/09 MECHANICAL STATE OF CALIFORNIA

PARSONS BRINCKERHOFF QUADE & DOUGLAS, INC.
303 SECOND STREET, SUITE 700 N
SAN FRANCISCO, CA 94107

The State of California or its officers or agents shall not be responsible for the accuracy or completeness of electronic copies of this plan sheet.

To get to the web site, go to http://www.dot.ca.gov

Caltrans Metric

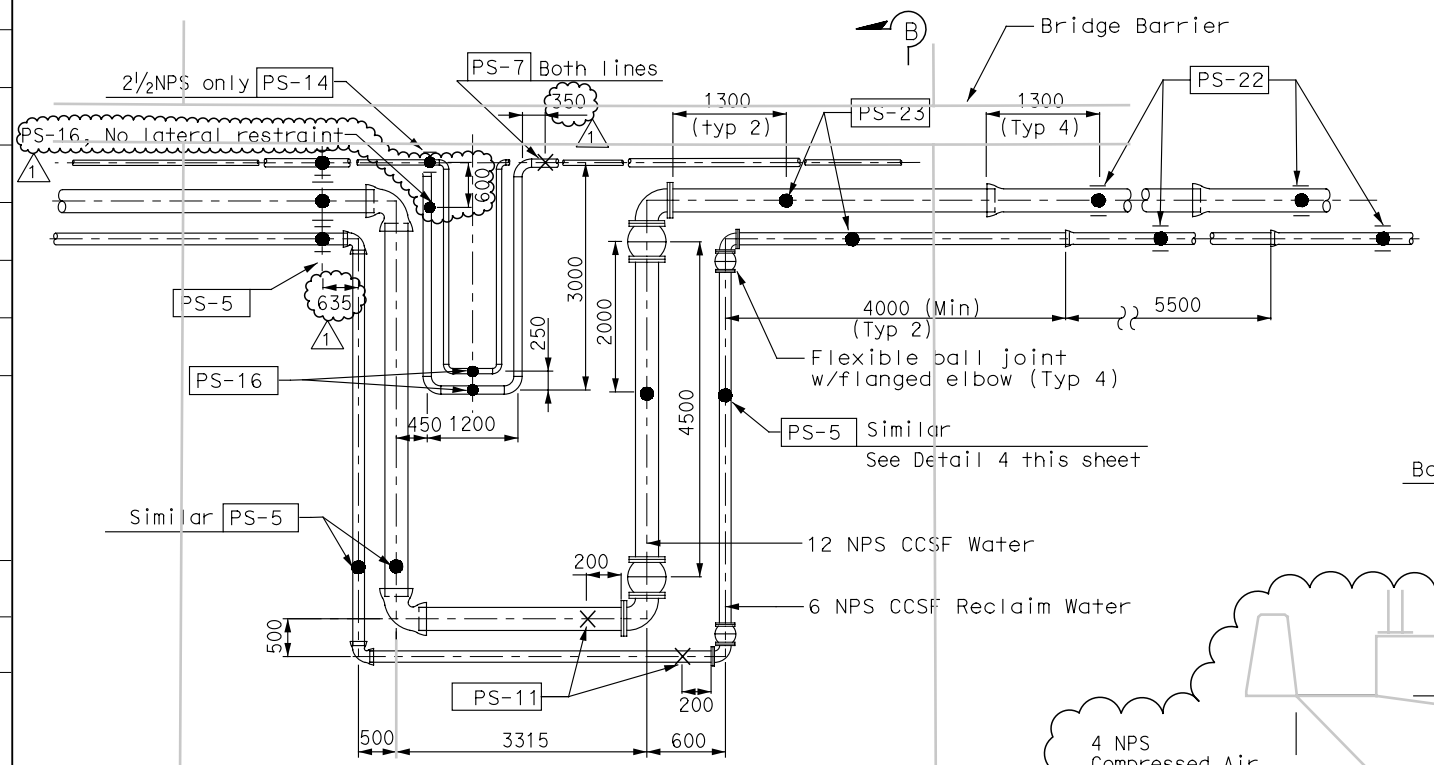

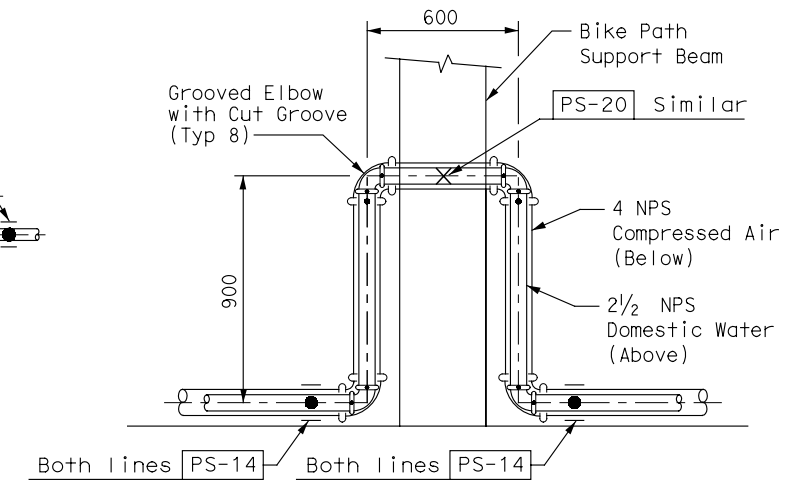

DETAIL 3 / -

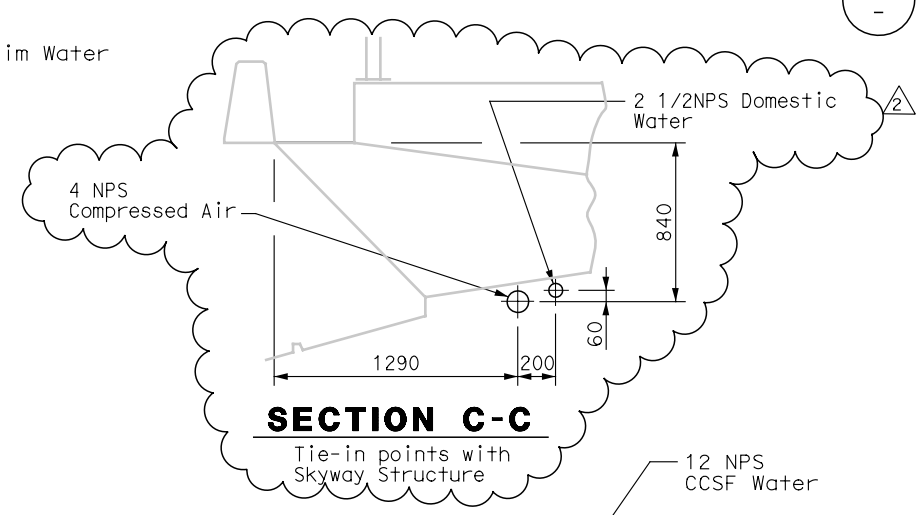

SECTION C-C
Tie-in points with Skyway Structure

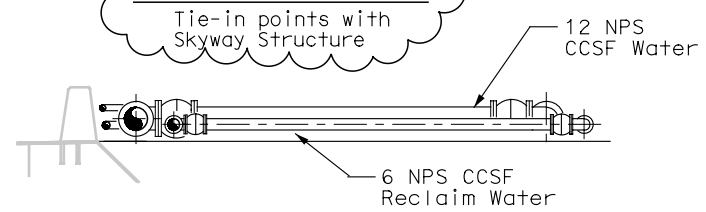

SECTION B-B

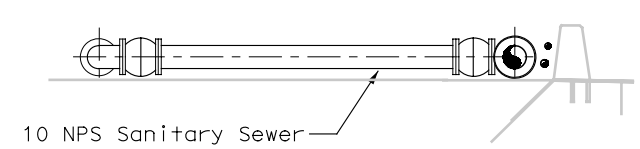

SECTION A-A

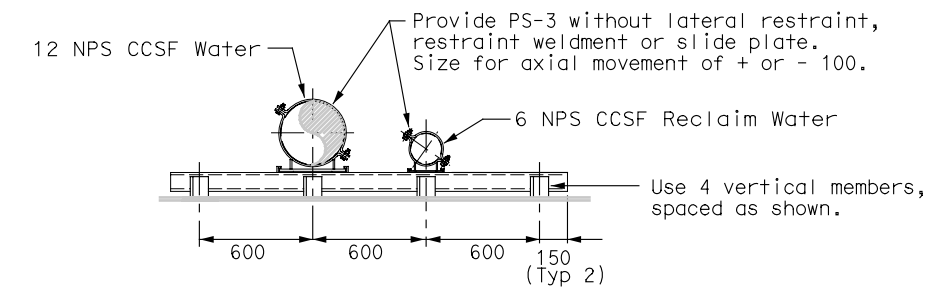

DETAIL 4 / -

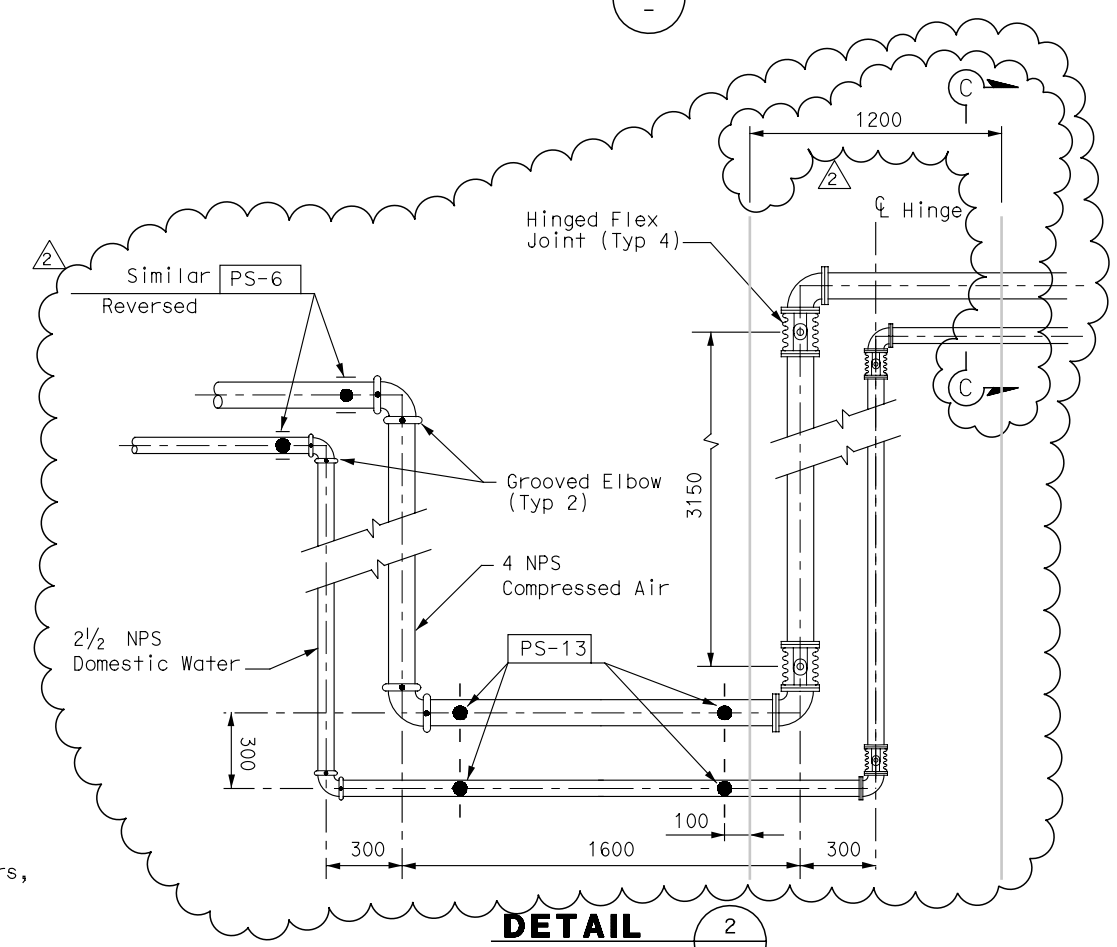

DETAIL 2 / -

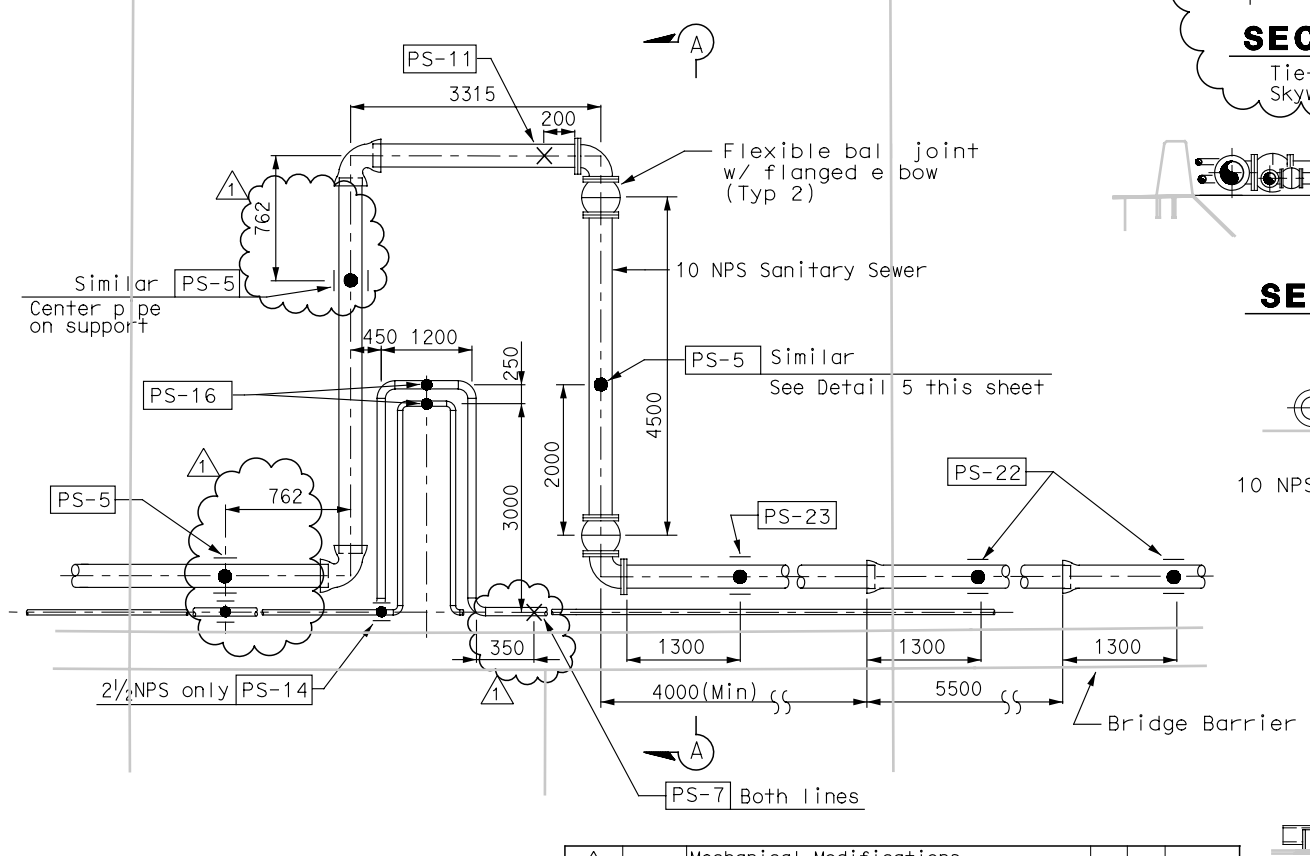

EXPANSION JOINTS FOR HINGE A

DETAIL 1 / M-10

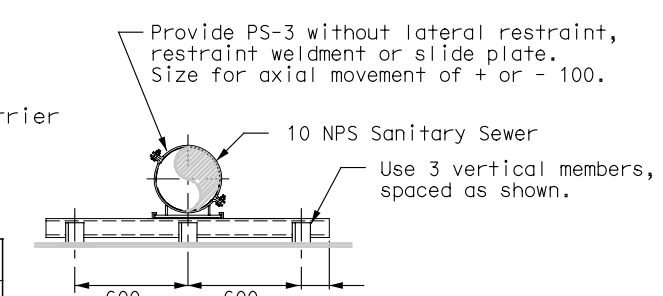

DETAIL 5 / -

MARK	DATE	DESCRIPTIONS	BY	CK	CCO
2	1/18/08	Mechanical Modifications	VY	BM	31
1	9/05/07	Mechanical Modifications	BM	RM	31

REVISIONS

CONTRACT CHANGE ORDER NO. 31
SHEET ____ OF ____

ALL DIMENSIONS IN MILLIMETERS UNLESS OTHERWISE SHOWN

MECHANICAL PIPING SECTIONS AND DETAILS NO. 5

NO SCALE

M-15

DATE	REVISED BY	DATE	REVISED BY
10/31/02	BM	11/15/02	KH

CALCULATED/DESIGNED BY
CHECKED BY

PROJECT ENGINEER Rich Newell

STATE OF CALIFORNIA - DEPARTMENT OF TRANSPORTATION
Caltrans

LAST REVISION 00-00-00
DATE PLOTTED => 1/22/2008
TIME PLOTTED => 3:17:56 PM

FOR REDUCED PLANS ORIGINAL SCALE IS IN MILLIMETERS 0 20 40 60 80

USERNAME => antonio
DGN FILE => t:\13103\ms\pse\sas struc\cco\sas cco31\04-0120f1_005h-02.dgn

CU 04251

EA 0120F1