DIST	COUNTY	ROUTE	KILOMETER POST TOTAL PROJECT	SHEET No	TOTAL SHEETS
04	SF	80	13.2/13.9	48R2	1204

Caltrans Metric

REGISTERED MECHANICAL ENGINEER DATE

12-6-04
PLANS APPROVAL DATE

REGISTERED PROFESSIONAL ENGINEER Bobby J. Melvin No. 28685 Exp. 6/30/05 MECHANICAL STATE OF CALIFORNIA

PARSONS BRINCKERHOFF QUADE & DOUGLAS, INC.
303 SECOND STREET, SUITE 700 N
SAN FRANCISCO, CA 94107

The State of California or its officers or agents shall not be responsible for the accuracy or completeness of electronic copies of this plan sheet.

Caltrans now has a web site! To get to the web site, go to http://www.dot.ca.gov

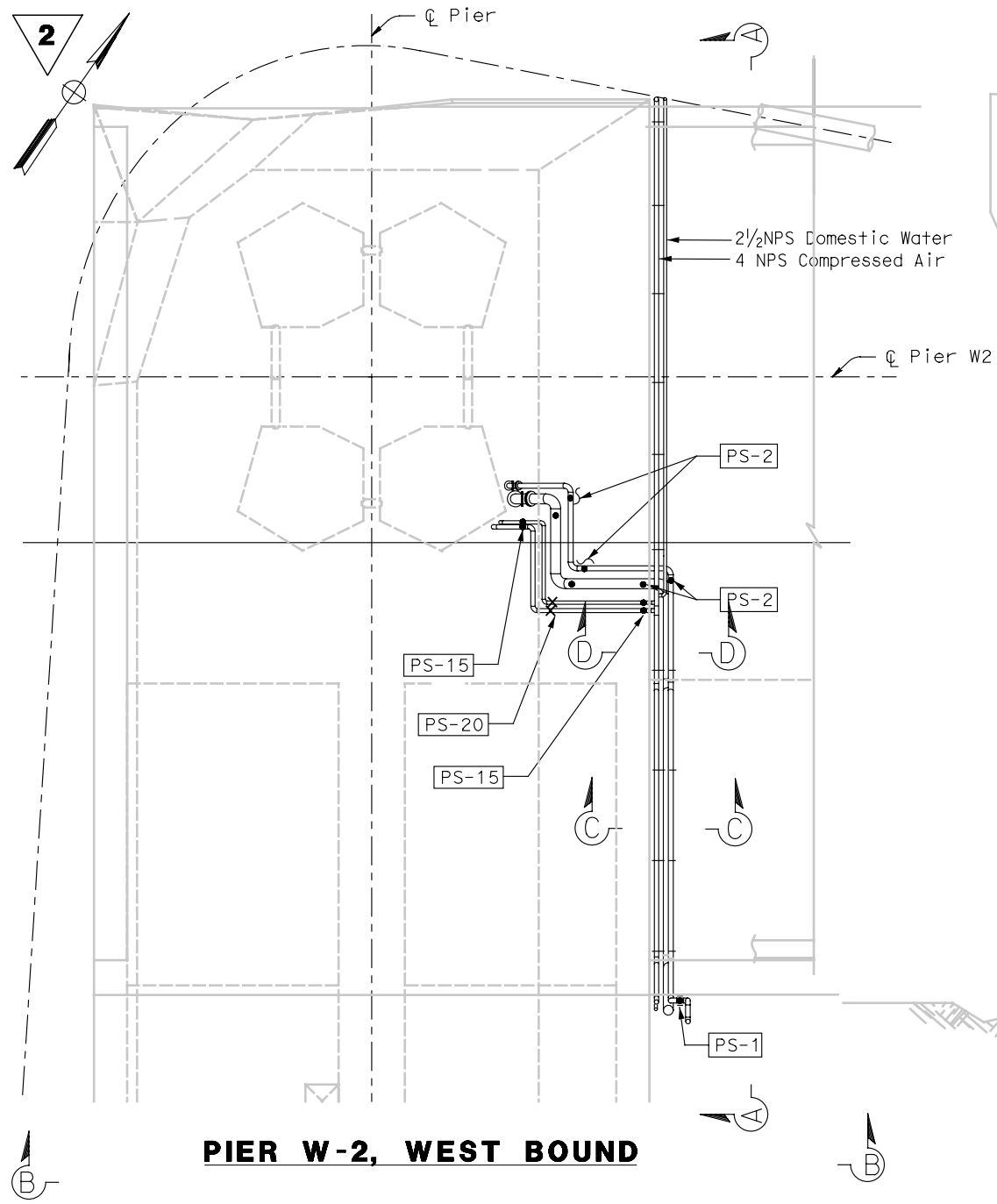

PIER W-2, WEST BOUND

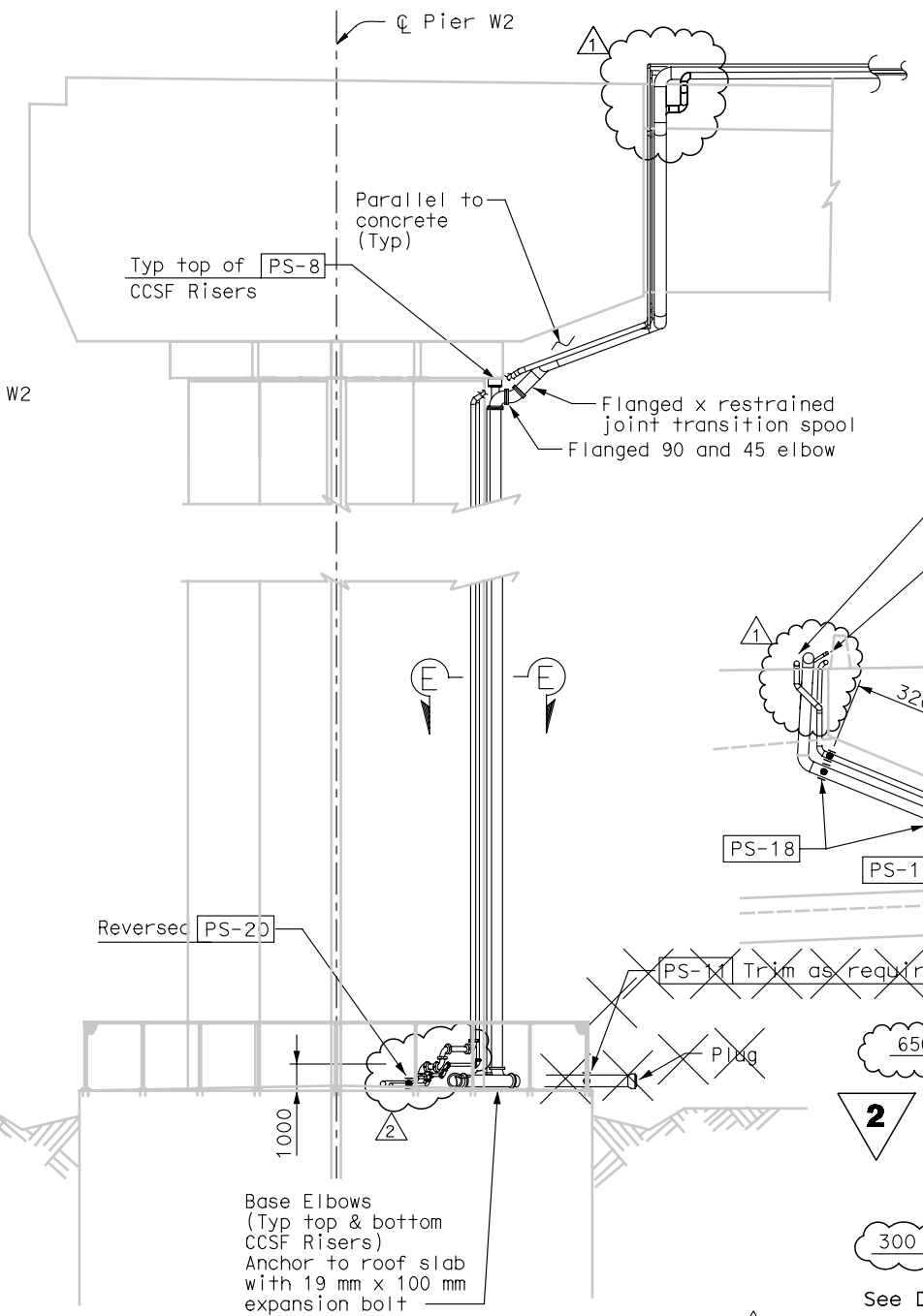

Base Elbows (Typ top & bottom CCSF Risers) Anchor to roof slab with 19 mm x 100 mm expansion bolt

SECTION B-B

Note:

1. Concrete embeds for pipe supports on Pier W-2 E & W provided by others (bottom of rises to elev. 47 M).

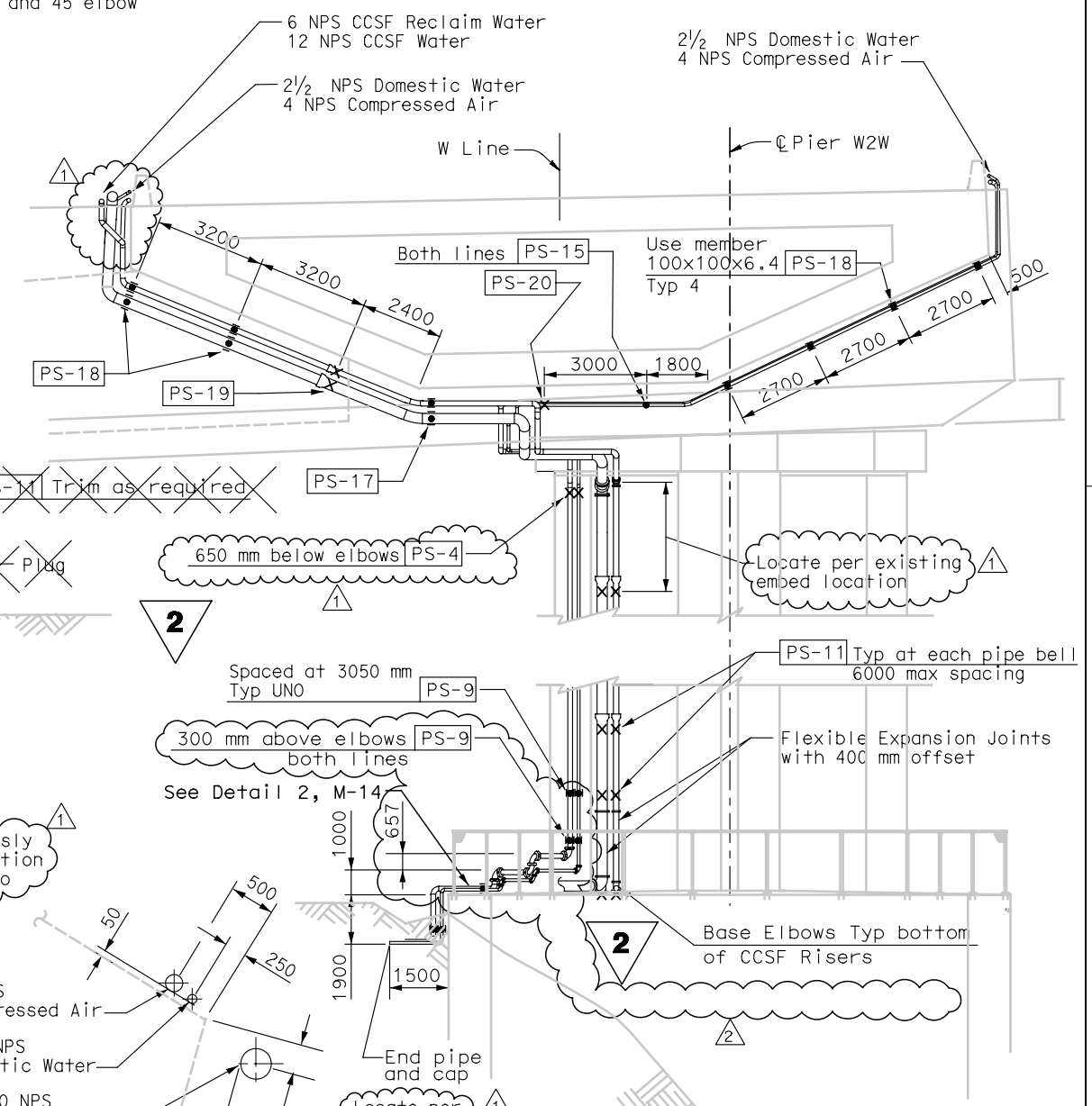

SECTION A-A

See Section C-C Dwg M-14 for Eastbound

DETAIL 1 / M-5

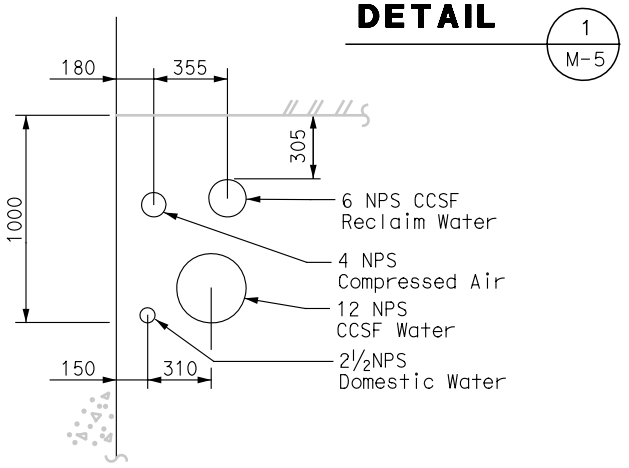

SECTION C-C

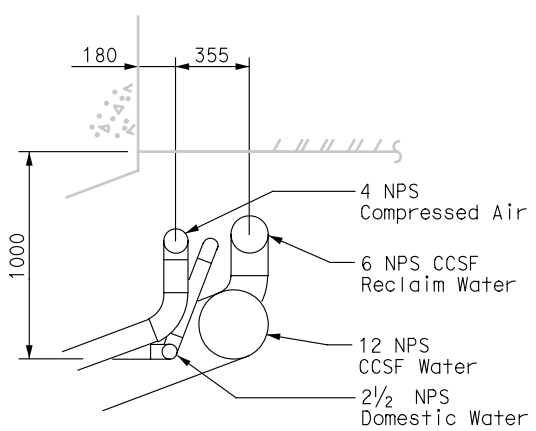

SECTION D-D

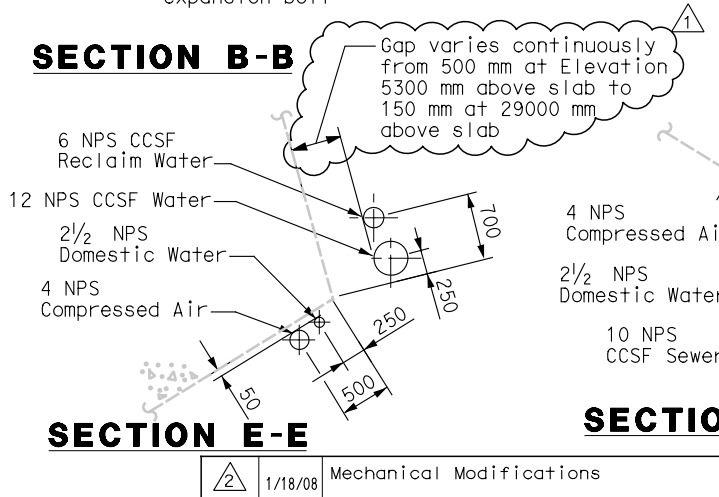

SECTION E-E

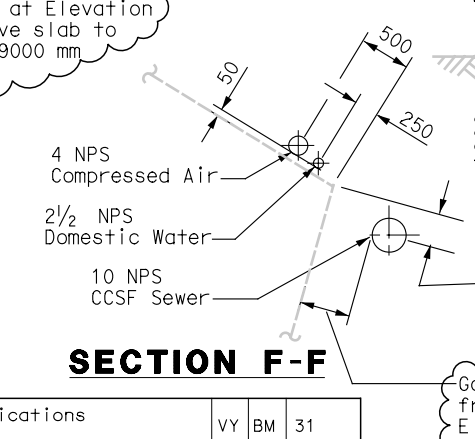

SECTION F-F

MARK	DATE	DESCRIPTIONS	BY	CK	CCO
2	1/18/08	Mechanical Modifications	VY	BM	31
1	9/05/07	Mechanical Modifications	BM	RM	31

REVISIONS

2 REVISED PER ADDENDUM NO. 2 DATED SEPTEMBER 29, 2005

CONTRACT CHANGE ORDER NO. 31
SHEET ____ OF ____

ALL DIMENSIONS IN MILLIMETERS UNLESS OTHERWISE SHOWN

MECHANICAL PIPING SECTIONS AND DETAILS No. 2

NO SCALE

M-12

DATE	REVISED BY	DATE	REVISED
10/31/02	BM	11/15/02	KH

CALCULATED/DESIGNED BY
CHECKED BY

PROJECT ENGINEER Rich Newell

STATE OF CALIFORNIA - DEPARTMENT OF TRANSPORTATION

Caltrans

LAST REVISION 00-00-00

DATE PLOTTED => 8DAZE/2008
TIME PLOTTED => 8STIME:55 PM

FOR REDUCED PLANS ORIGINAL SCALE IS IN MILLIMETERS 0 20 40 60 80

USERNAME => antonio
DGN FILE => t:\13103\ms\pse\sas struc\cco\sas cco31\04-0120f1_0048r02.dgn

CU 04251

EA 0120F1