DIST	COUNTY	ROUTE	KILOMETER POST TOTAL PROJECT	SHEET No	TOTAL SHEETS
04	SF	80	13.2/13.9	41R1	1204

Bobby J. Melvin 12/19/2002
REGISTERED MECHANICAL ENGINEER DATE

REGISTERED PROFESSIONAL ENGINEER Bobby J. Melvin No. 28685 Exp. 6/30/09 MECHANICAL STATE OF CALIFORNIA

12-6-04
PLANS APPROVAL DATE

PARSONS BRINCKERHOFF QUADE & DOUGLAS, INC.
303 SECOND STREET, SUITE 700 N
SAN FRANCISCO, CA 94107

The State of California or its officers or agents shall not be responsible for the accuracy or completeness of electronic copies of this plan sheet.

To get to the web site, go to http://www.dot.ca.gov

Caltrans Metric

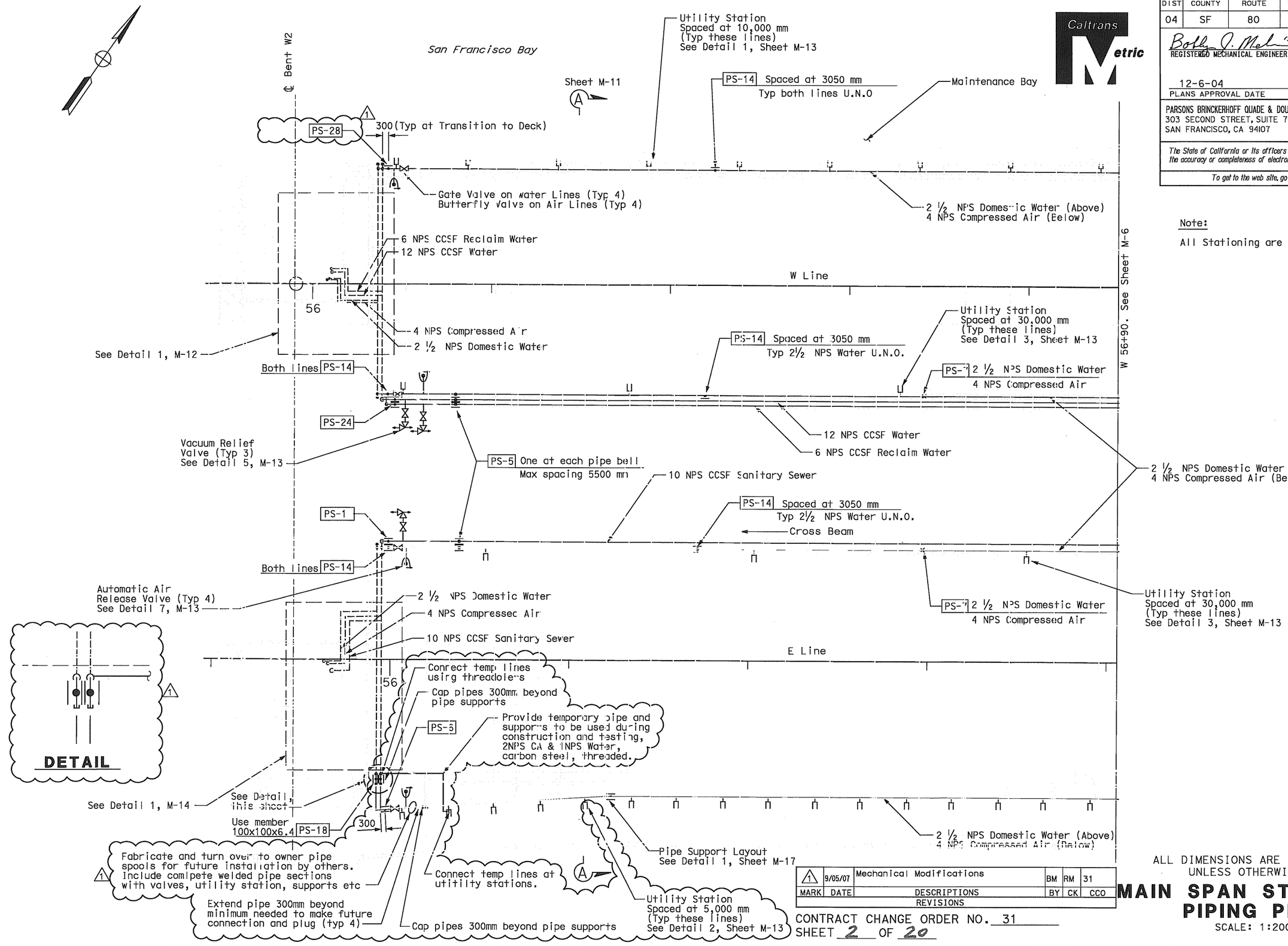

Note:

All Stationing are in meters.

MARK	DATE	DESCRIPTIONS	BY	CK	CCO
1	9/05/07	Mechanical Modifications	BM	RM	31

REVISIONS

CONTRACT CHANGE ORDER NO. 31
SHEET 2 OF 20

ALL DIMENSIONS ARE IN MILLIMETERS UNLESS OTHERWISE SHOWN.

MAIN SPAN STRUCTURE PIPING PLAN

SCALE: 1:200

M-5

CALCULATED/ DESIGNED BY	CHECKED BY	REVISED BY	DATE REVISED
BM	KH		
DATE 10/31/02	11/15/02		

PROJECT ENGINEER Rich Newell

STATE OF CALIFORNIA - DEPARTMENT OF TRANSPORTATION

Caltrans

FOR REDUCED PLANS ORIGINAL 0 20 40 60 80

LAST REVISION

DIST	COUNTY	ROUTE	KILOMETER POST TOTAL PROJECT	SHEET No	TOTAL SHEETS
04	SF	80	13.2/13.9	42R1	1204

Bobby J. Melvin 12/19/2002
REGISTERED MECHANICAL ENGINEER DATE

12-6-04
PLANS APPROVAL DATE

REGISTERED PROFESSIONAL ENGINEER Bobby J. Melvin No. 28685 Exp. 6/30/09 MECHANICAL STATE OF CALIFORNIA

PARSONS BRINCKERHOFF QUADE & DOUGLAS, INC.
303 SECOND STREET, SUITE 700 N
SAN FRANCISCO, CA 94107

The State of California or its officers or agents shall not be responsible for the accuracy or completeness of electronic copies of this plan sheet.

To get to the web site, go to http://www.dot.ca.gov

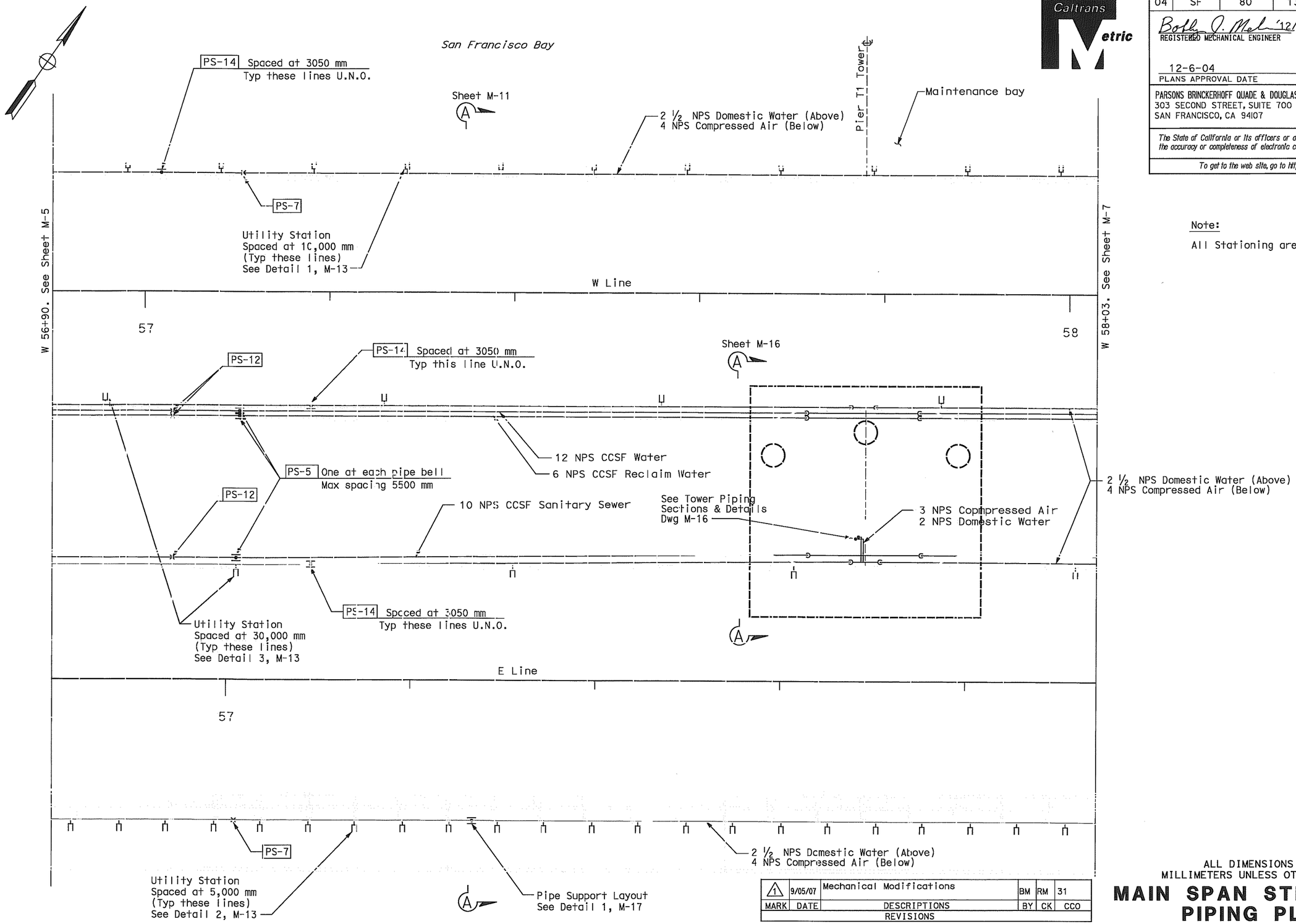

Note:

All Stationing are in meters.

MARK	DATE	DESCRIPTIONS	BY	CK	CCO
1	9/05/07	Mechanical Modifications	BM	RM	31

REVISIONS

CONTRACT CHANGE ORDER NO. 31
SHEET 3 OF 20

ALL DIMENSIONS ARE IN
MILLIMETERS UNLESS OTHERWISE SHOWN

MAIN SPAN STRUCTURE PIPING PLAN

SCALE: 1:200

M-6

LAST REVISION

REVISED BY	DATE	DATE REVISED
BM	10/31/02	11/15/02

CALCULATED/DESIGNED BY: BM
CHECKED BY: KH

PROJECT ENGINEER: Rich Newell

STATE OF CALIFORNIA - DEPARTMENT OF TRANSPORTATION

Caltrans

FOR REDUCED PLANS ORIGINAL 0 20 40 60 80

DIST	COUNTY	ROUTE	KILOMETER POST TOTAL PROJECT	SHEET No	TOTAL SHEETS
04	SF	80	13.2/13.9	43R1	1204

Bobby J. Melvin 12/19/2002
REGISTERED MECHANICAL ENGINEER DATE

12-6-04
PLANS APPROVAL DATE

REGISTERED PROFESSIONAL ENGINEER Bobby J. Melvin No. 28685 Exp. 6/30/09 MECHANICAL STATE OF CALIFORNIA

PARSONS BRINCKERHOFF QUADE & DOUGLAS, INC.
303 SECOND STREET, SUITE 700 N
SAN FRANCISCO, CA 94107

The State of California or its officers or agents shall not be responsible for the accuracy or completeness of electronic copies of this plan sheet.

To get to the web site, go to http://www.dot.ca.gov

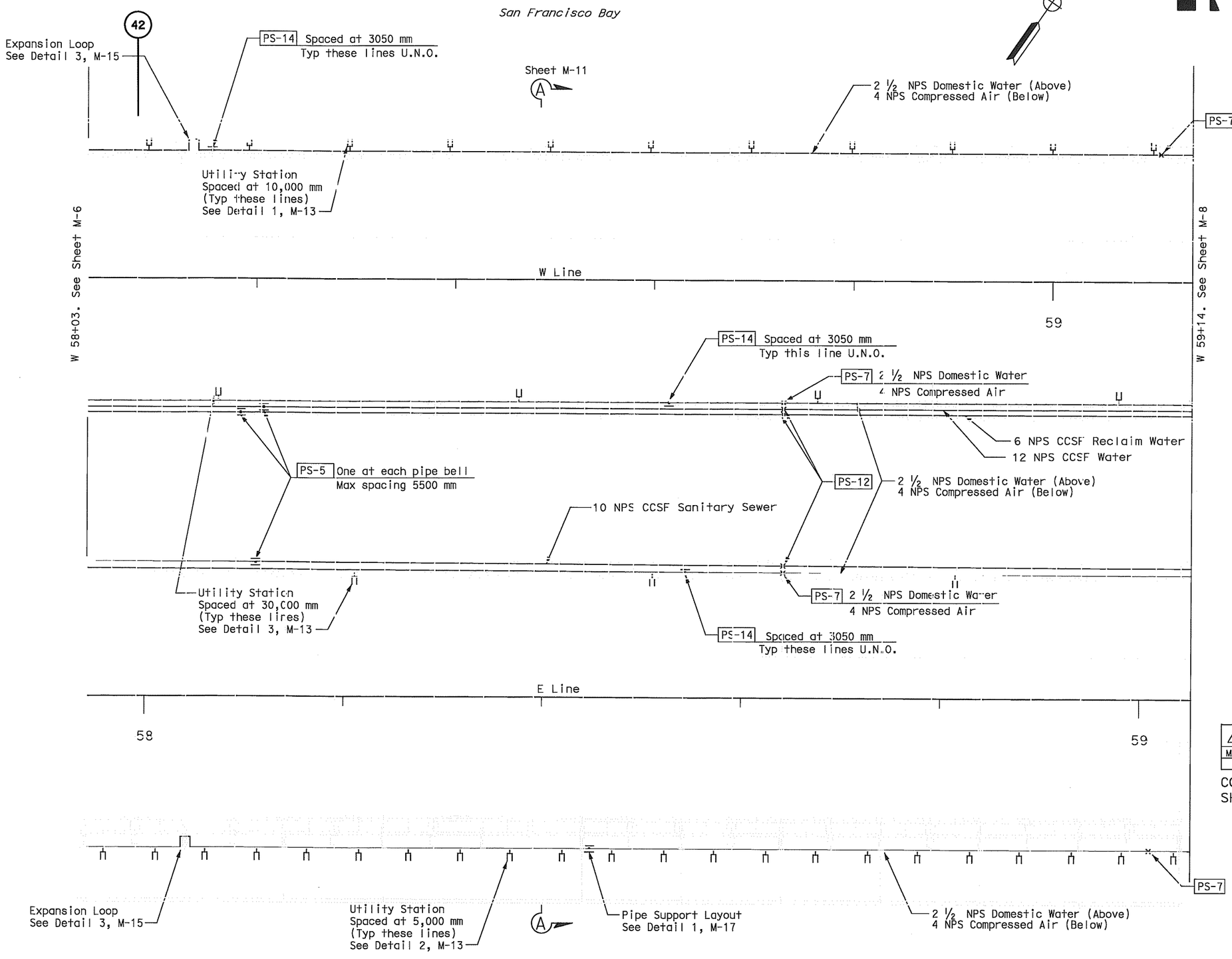

Note:

All Stationing are in meters.

MARK	DATE	DESCRIPTIONS	BY	CK	CCO
1	9/05/07	Mechanical Modifications	BM	RM	31

REVISIONS

CONTRACT CHANGE ORDER NO. 31
SHEET 4 OF 20

ALL DIMENSIONS ARE IN MILLIMETERS UNLESS OTHERWISE SHOWN

MAIN SPAN STRUCTURE PIPING PLAN

SCALE: 1:200

M-7

REVISED BY	DATE REVISED
BM	10/31/02
KH	11/15/02

CALCULATED/DESIGNED BY
CHECKED BY

PROJECT ENGINEER Rich Newell

STATE OF CALIFORNIA - DEPARTMENT OF TRANSPORTATION

Caltrans

LAST REVISION

FOR REDUCED PLANS ORIGINAL 0 20 40 60 80

DIST	COUNTY	ROUTE	KILOMETER POST TOTAL PROJECT	SHEET No	TOTAL SHEETS
04	SF	80	13.2/13.9	44R1	1204

Bobby J. Melvin 12/19/2002
REGISTERED MECHANICAL ENGINEER DATE

12-6-04
PLANS APPROVAL DATE

REGISTERED PROFESSIONAL ENGINEER Bobby J. Melvin No. 28685 Exp. 6/30/09 MECHANICAL STATE OF CALIFORNIA

PARSONS BRINCKERHOFF QUADE & DOUGLAS, INC.
303 SECOND STREET, SUITE 700 N
SAN FRANCISCO, CA 94107

The State of California or its officers or agents shall not be responsible for the accuracy or completeness of electronic copies of this plan sheet.

To get to the web site, go to http://www.dot.ca.gov

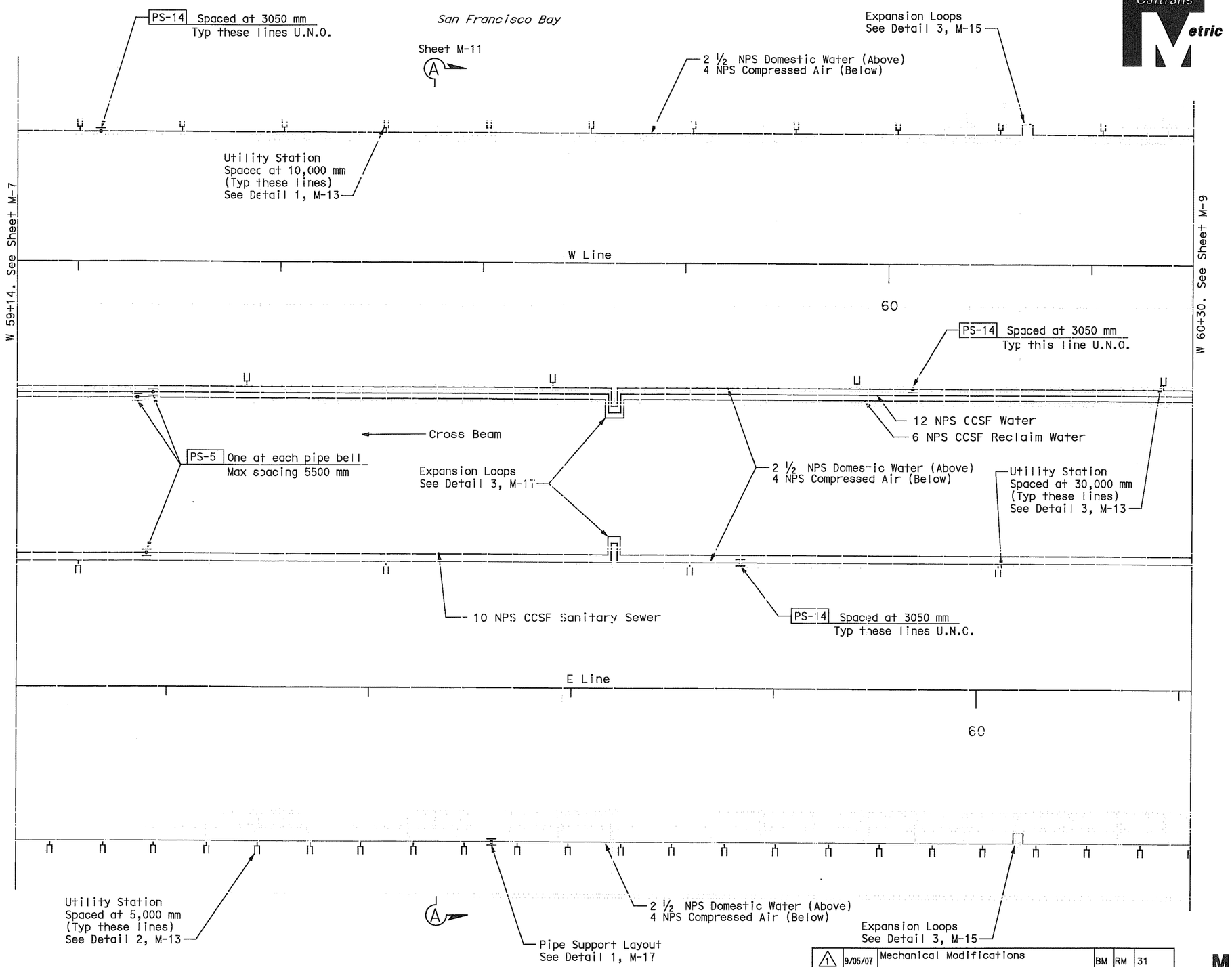

Note:

All Stationing are in meters.

MARK	DATE	DESCRIPTIONS	BY	CK	CCO
1	9/05/07	Mechanical Modifications	BM	RM	31

REVISIONS

CONTRACT CHANGE ORDER NO. 31
SHEET 5 OF 20

ALL DIMENSIONS ARE IN MILLIMETERS UNLESS OTHERWISE SHOWN

MAIN SPAN STRUCTURE PIPING PLAN

SCALE: 1:200

M-8

REVISED BY	DATE	CALCULATED/DESIGNED BY	BM	10/31/02
DATE REVISED		CHECKED BY	KH	11/15/02

PROJECT ENGINEER Rich Newell

STATE OF CALIFORNIA - DEPARTMENT OF TRANSPORTATION

Caltrans

Caltrans Metric

LAST REVISION

FOR REDUCED PLANS ORIGINAL 0 20 40 60 80

DIST	COUNTY	ROUTE	KILOMETER POST TOTAL PROJECT	SHEET No	TOTAL SHEETS
04	SF	80	13.2/13.9	45R1	1204

Bobby J. Melvin 12/19/2002
REGISTERED MECHANICAL ENGINEER DATE

12-6-04
PLANS APPROVAL DATE

REGISTERED PROFESSIONAL ENGINEER Bobby J. Melvin No. 28685 Exp. 6/30/09 MECHANICAL STATE OF CALIFORNIA

PARSONS BRINCKERHOFF QUADE & DOUGLAS, INC.
303 SECOND STREET, SUITE 700 N
SAN FRANCISCO, CA 94107

The State of California or its officers or agents shall not be responsible for the accuracy or completeness of electronic copies of this plan sheet.

To get to the web site, go to http://www.dot.ca.gov

Note:

All Stationing are in meters.

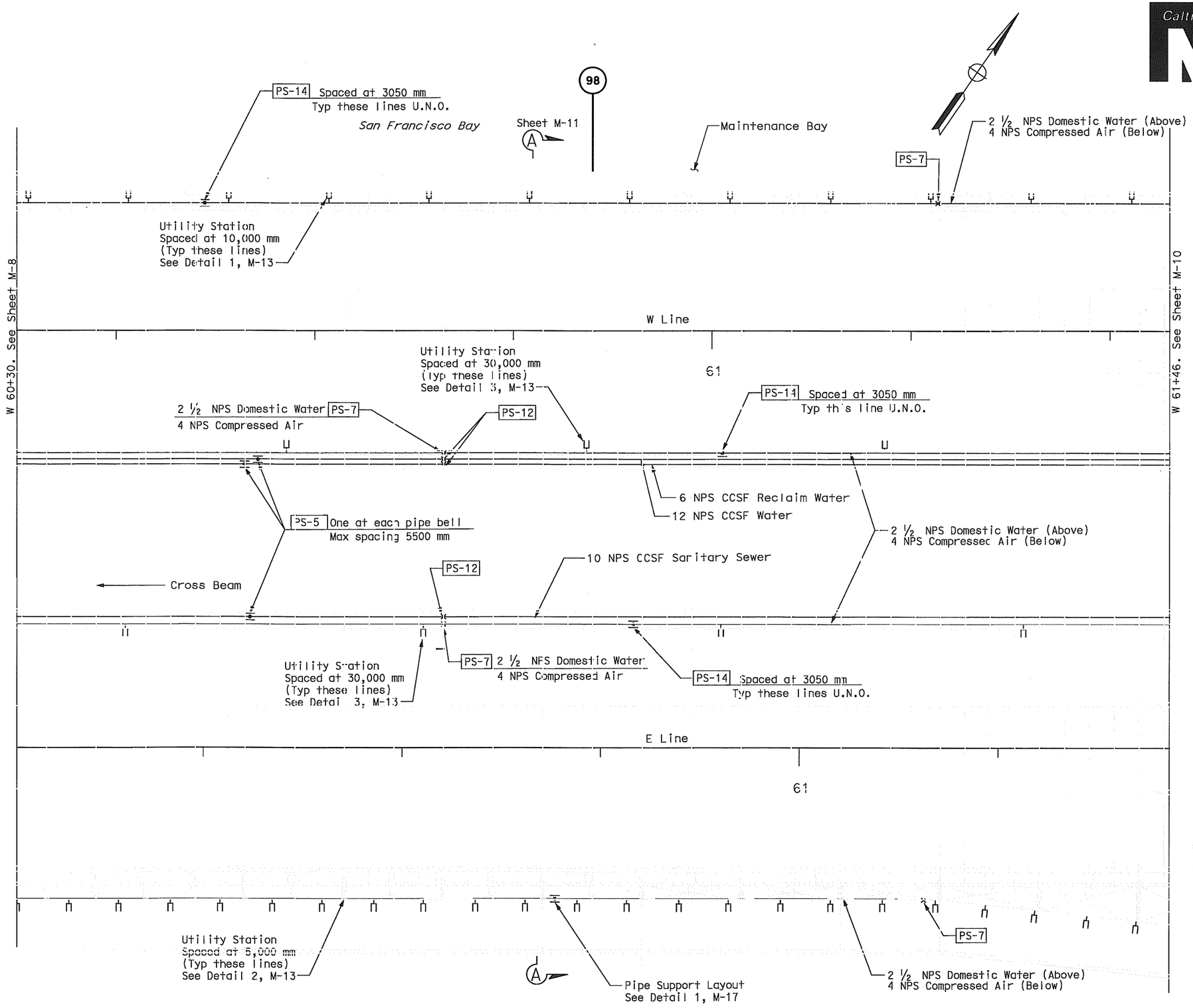

MARK	DATE	DESCRIPTIONS	BY	CK	CCO
1	9/05/07	Mechanical Modifications	BM	RM	31

REVISIONS

CONTRACT CHANGE ORDER NO. 31
SHEET 6 OF 20

ALL DIMENSIONS ARE IN MILLIMETERS UNLESS OTHERWISE SHOWN

MAIN SPAN STRUCTURE PIPING PLAN

SCALE: 1:200

M-9

	DATE	REVISED BY	DATE	REVISED BY
	10/31/02	BM	11/15/02	KH

CALCULATED/DESIGNED BY — CHECKED BY

PROJECT ENGINEER Rich Newell

STATE OF CALIFORNIA - DEPARTMENT OF TRANSPORTATION

Caltrans

LAST REVISION

FOR REDUCED PLANS ORIGINAL 0 20 40 60 80

DIST	COUNTY	ROUTE	KILOMETER POST TOTAL PROJECT	SHEET No	TOTAL SHEETS
04	SF	80	13.2/13.9	46R1	1204

Bobby J. Melvin 12/19/2002
REGISTERED MECHANICAL ENGINEER DATE

126-04
PLANS APPROVAL DATE

REGISTERED PROFESSIONAL ENGINEER Bobby J. Melvin No. 28685 Exp. 6/30/09 MECHANICAL STATE OF CALIFORNIA

PARSONS BRINCKERHOFF QUADE & DOUGLAS, INC.
303 SECOND STREET, SUITE 700 N
SAN FRANCISCO, CA 94107

The State of California or its officers or agents shall not be responsible for the accuracy or completeness of electronic copies of this plan sheet.

Caltrans now has a web site! To get to the web site, go to http://www.dot.ca.gov

Caltrans Metric

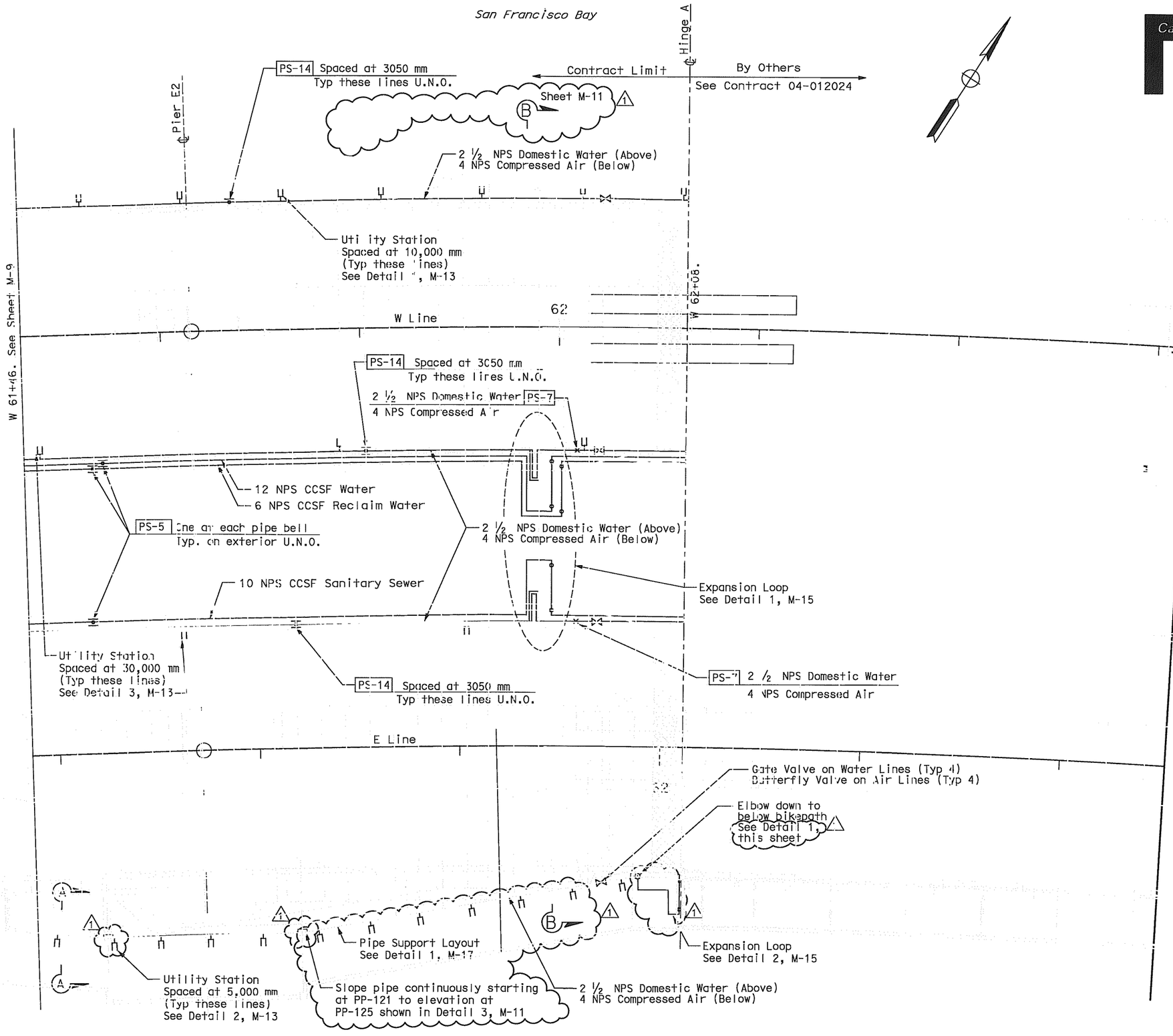

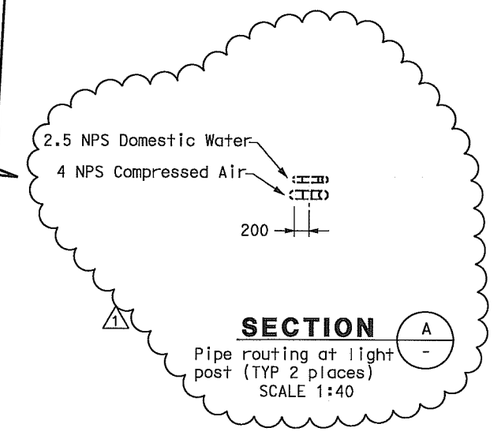

MARK	DATE	DESCRIPTIONS	BY	CK	CCO
1	9/05/07	Mechanical Modifications	BM	RM	31

REVISIONS

CONTRACT CHANGE ORDER NO. 31
SHEET 7 OF 20

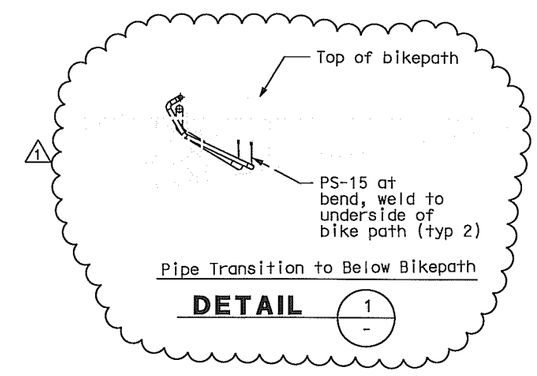

MAIN SPAN STRUCTURE PIPING PLAN

SCALE: 1:200

M-10

ALL DIMENSIONS IN MILIMETERS UNLESS OTHERWISE SHOWN

FOR REDUCED PLANS ORIGINAL 0 20 40 60 80

STATE OF CALIFORNIA - DEPARTMENT OF TRANSPORTATION

Caltrans

PROJECT ENGINEER Rich Newell

CALCULATED/DESIGNED BY BM DATE 10/31/02 REVISED BY
CHECKED BY KH 11/15/02 DATE REVISED

LAST REVISION

DIST	COUNTY	ROUTE	KILOMETER POST TOTAL PROJECT	SHEET No	TOTAL SHEETS
04	SF	80	13.2/13.9	47R1	1204

Bobby J. Melvin 12/19/2002
REGISTERED MECHANICAL ENGINEER DATE

12-6-04
PLANS APPROVAL DATE

REGISTERED PROFESSIONAL ENGINEER Bobby J. Melvin No. 28685 Exp. 6/30/09 MECHANICAL STATE OF CALIFORNIA

PARSONS BRINCKERHOFF QUADE & DOUGLAS, INC.
303 SECOND STREET, SUITE 700 N
SAN FRANCISCO, CA 94107

The State of California or its officers or agents shall not be responsible for the accuracy or completeness of electronic copies of this plan sheet.

Caltrans now has a web site! To get to the web site, go to http://www.dot.ca.gov

Caltrans Metric

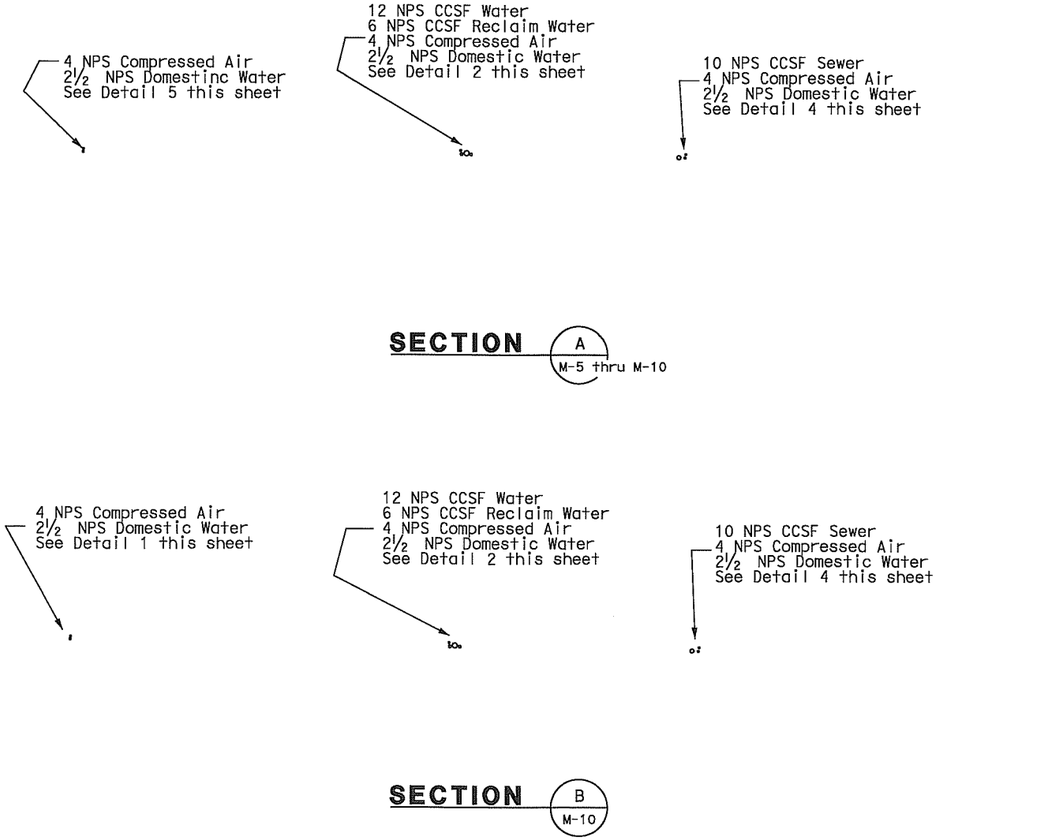

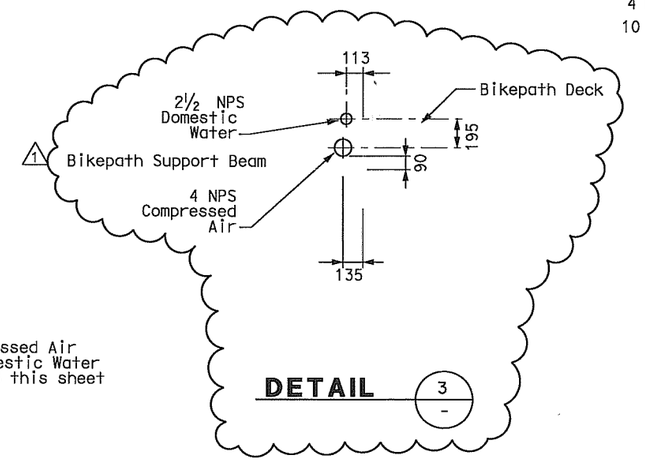

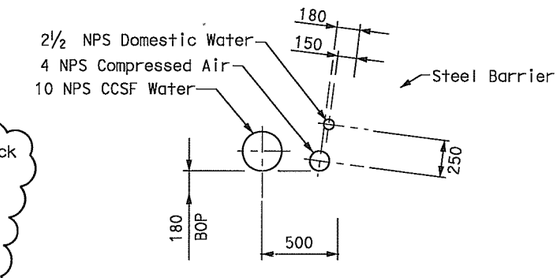

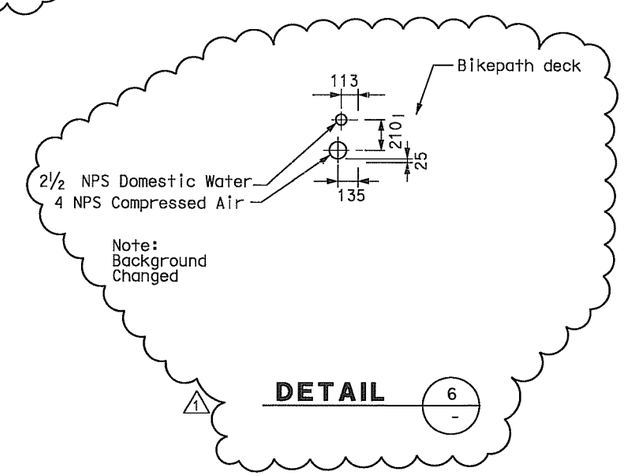

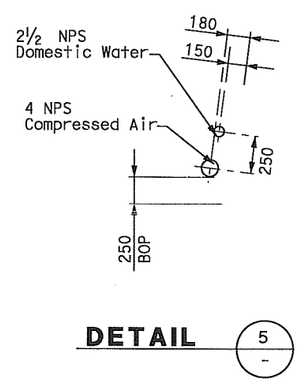

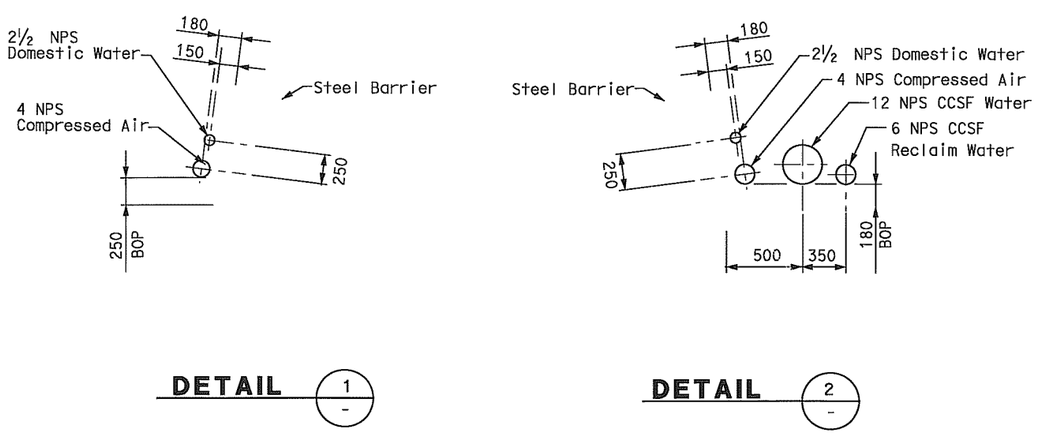

MARK	DATE	DESCRIPTIONS	BY	CK	CCO
1	9/05/07	Mechanical Modifications	BM	RM	31

REVISIONS

CONTRACT CHANGE ORDER NO. 31
SHEET 8 OF 20

ALL DIMENSIONS IN MILLIMETERS UNLESS OTHERWISE SHOWN

MECHANICAL PIPING SECTIONS AND DETAILS NO. 1

NO SCALE

M-11

CALCULATED/ DESIGNED BY	DATE 10/31/02	REVISED BY	DATE REVISED
CHECKED BY	BM 11/15/02	KH	

PROJECT ENGINEER Rich Newell

STATE OF CALIFORNIA - DEPARTMENT OF TRANSPORTATION

Caltrans

FOR REDUCED PLANS ORIGINAL 0 20 40 60 80

LAST REVISION

DIST	COUNTY	ROUTE	KILOMETER POST TOTAL PROJECT	SHEET No	TOTAL SHEETS
04	SF	80	13.2/13.9	48R1	1204

Bobby J. Melvin 12/19/2002
REGISTERED MECHANICAL ENGINEER DATE

12-6-04
PLANS APPROVAL DATE

REGISTERED PROFESSIONAL ENGINEER Bobby J. Melvin No. 28685 Exp. 6/30/09 MECHANICAL STATE OF CALIFORNIA

PARSONS BRINCKERHOFF QUADE & DOUGLAS, INC.
303 SECOND STREET, SUITE 700 N
SAN FRANCISCO, CA 94107

The State of California or its officers or agents shall not be responsible for the accuracy or completeness of electronic copies of this plan sheet.

Caltrans now has a web site! To get to the web site, go to http://www.dot.ca.gov

Caltrans Metric

Note:

1. Concrete embeds for pipe supports on Pier W-2 E & W provided by others (bottom of rises to elev. 47 M).

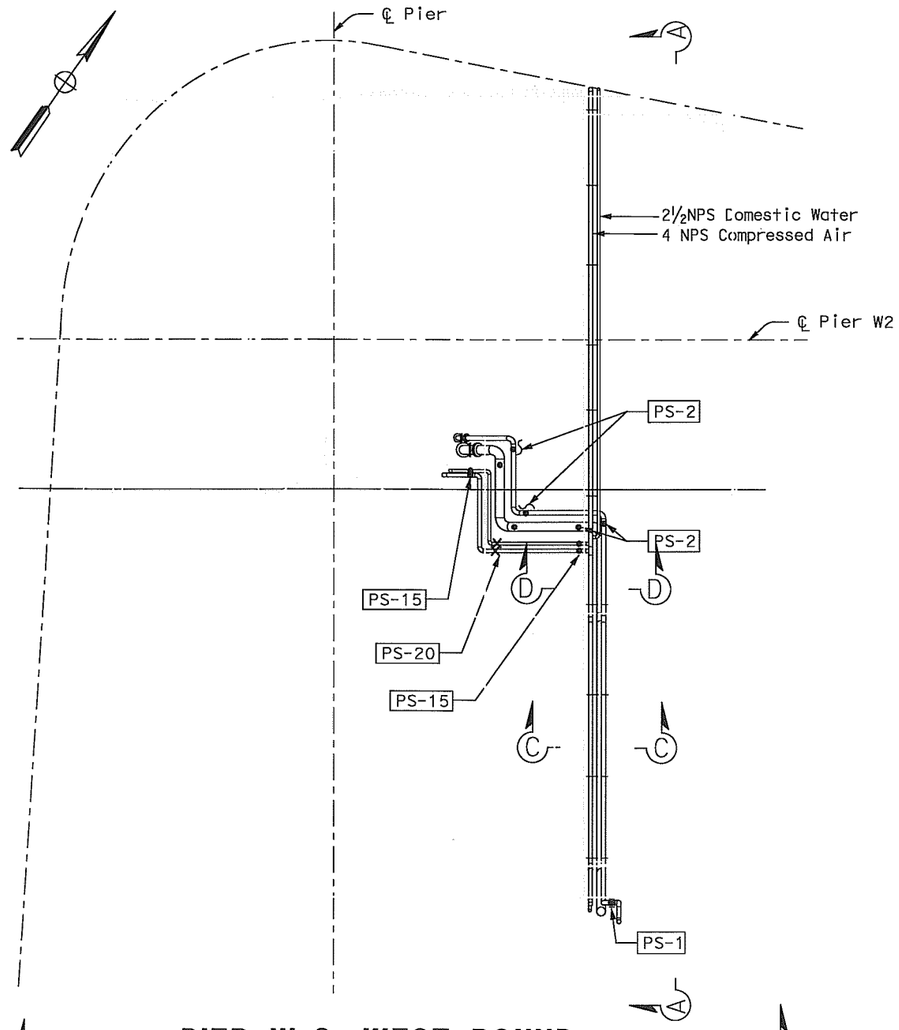

PIER W-2, WEST BOUND DETAIL

1 / M-5

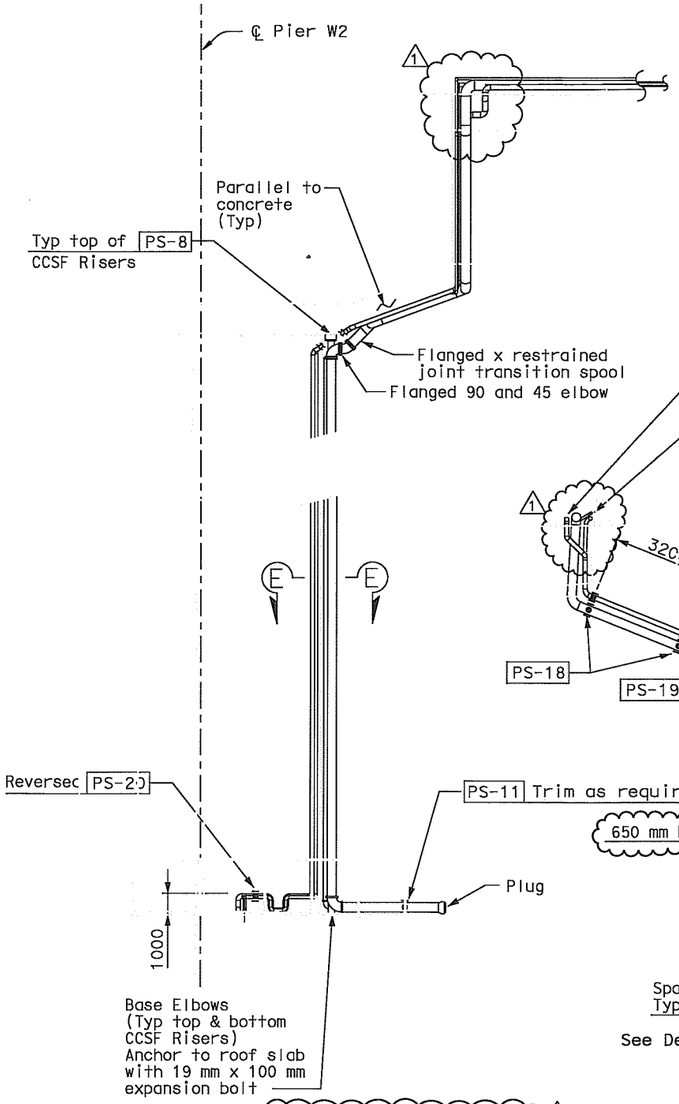

SECTION B-B

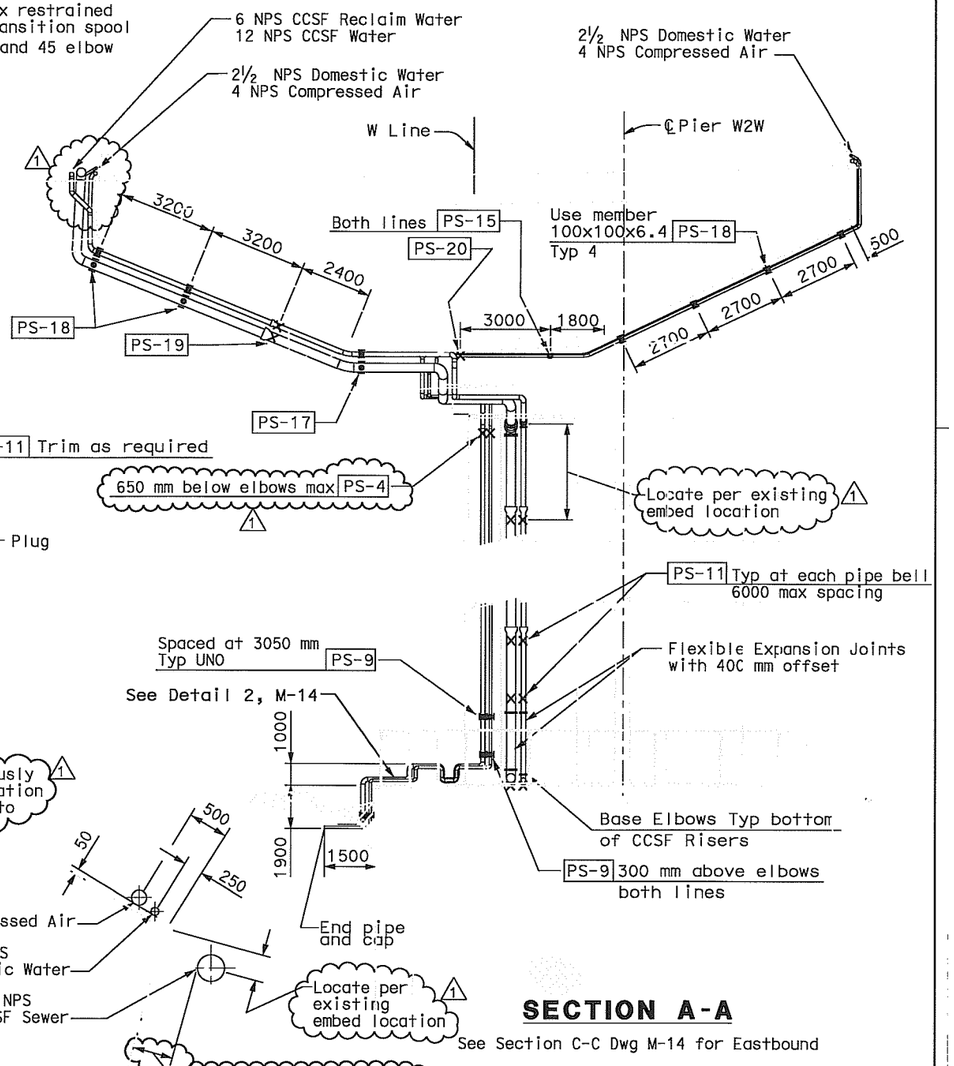

SECTION A-A

See Section C-C Dwg M-14 for Eastbound

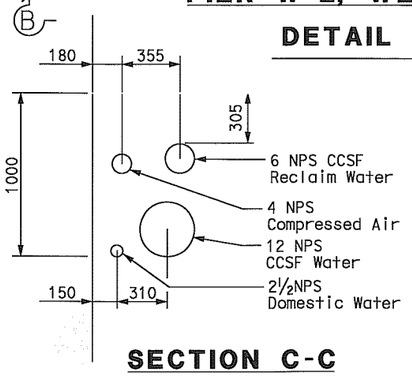

SECTION C-C

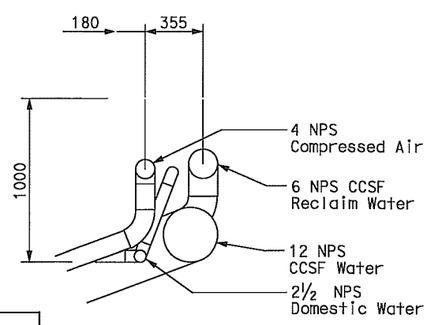

SECTION D-D

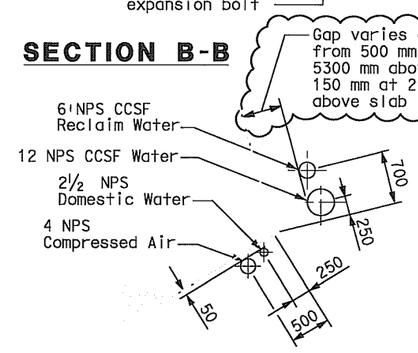

SECTION E-E

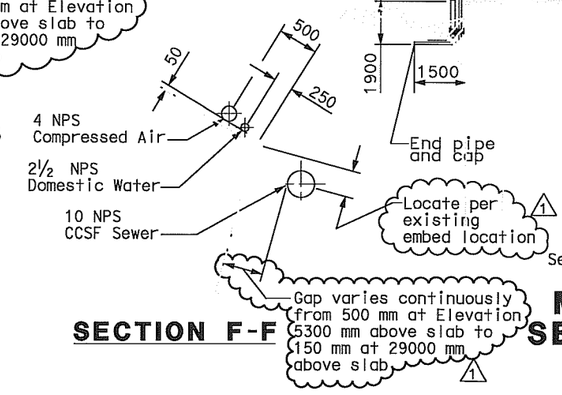

SECTION F-F

MARK	DATE	DESCRIPTIONS	BY	CK	CCO
1	9/05/07	Mechanical Modifications	BM	RM	31

REVISIONS

CONTRACT CHANGE ORDER NO. 31
SHEET 9 OF 20

MECHANICAL PIPING SECTIONS AND DETAILS No. 2

NO SCALE

ALL DIMENSIONS IN MILLIMETERS UNLESS OTHERWISE SHOWN

M-12

REVISED BY	DATE REVISED
BM	KH
DATE 10/31/02	11/15/02

CALCULATED/DESIGNED BY — CHECKED BY

PROJECT ENGINEER: Rich Newell

STATE OF CALIFORNIA - DEPARTMENT OF TRANSPORTATION

Caltrans

LAST REVISION

FOR REDUCED PLANS ORIGINAL 0 20 40 60 80

DIST	COUNTY	ROUTE	KILOMETER POST TOTAL PROJECT	SHEET No	TOTAL SHEETS
04	SF	80	13.2/13.9	51R1	1204

Bobby J. Melvin 12/19/2002
REGISTERED MECHANICAL ENGINEER DATE

12-6-04
PLANS APPROVAL DATE

REGISTERED PROFESSIONAL ENGINEER Bobby J. Melvin No. 28685 Exp. 6/30/09 MECHANICAL STATE OF CALIFORNIA

PARSONS BRINCKERHOFF QUADE & DOUGLAS, INC.
303 SECOND STREET, SUITE 700 N
SAN FRANCISCO, CA 94107

The State of California or its officers or agents shall not be responsible for the accuracy or completeness of electronic copies of this plan sheet.

To get to the web site, go to http://www.dot.ca.gov

Caltrans Metric

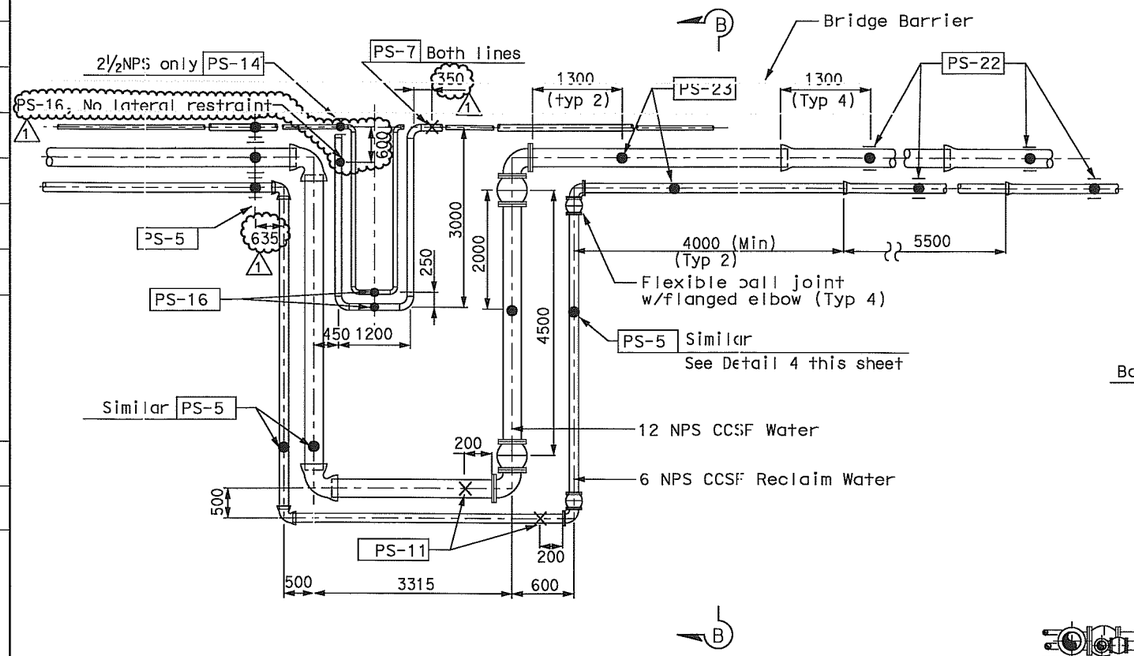

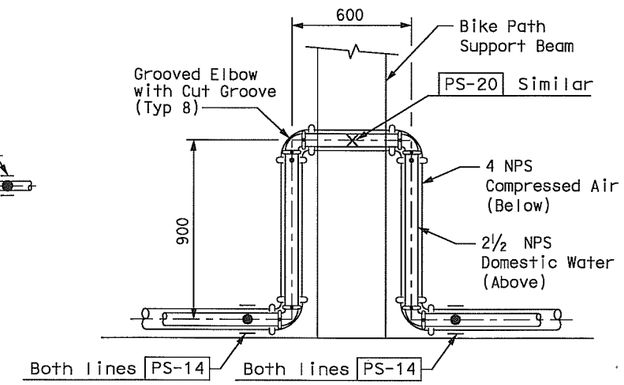

DETAIL 3

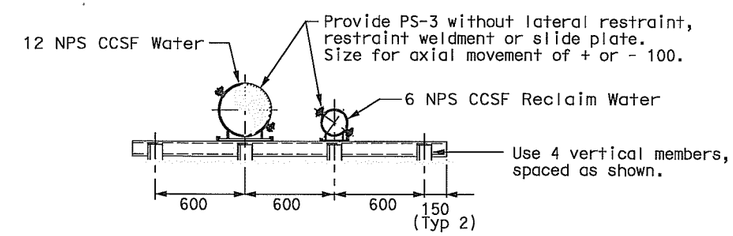

DETAIL 4

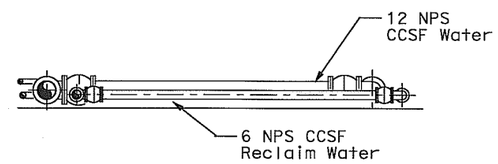

SECTION B-B

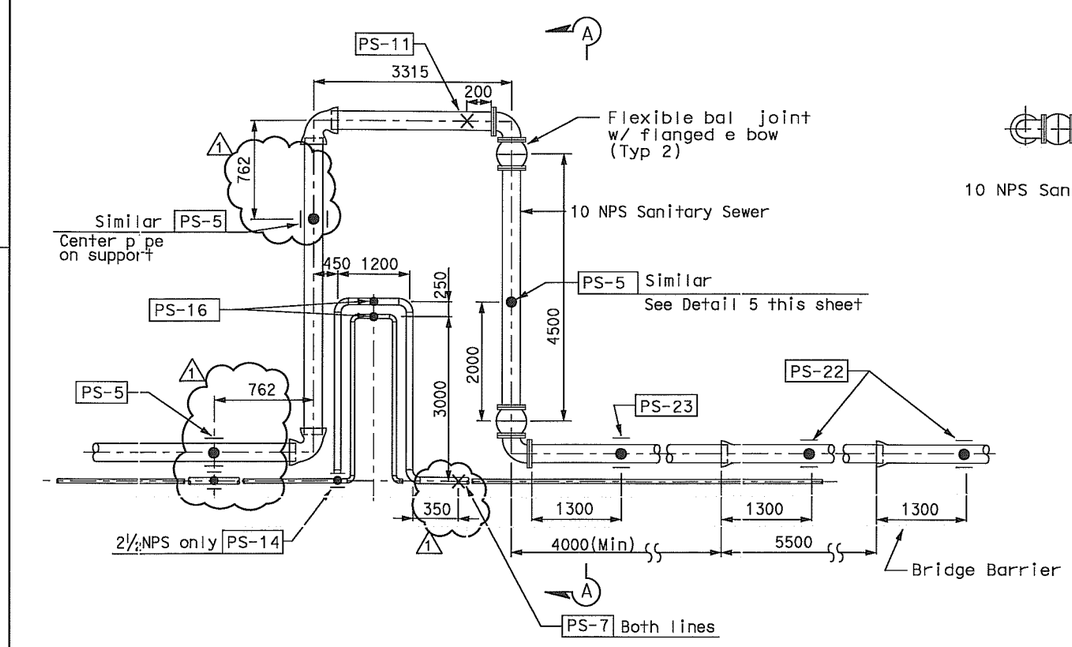

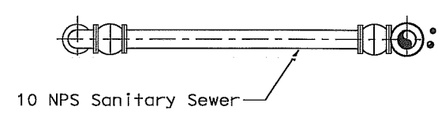

SECTION A-A

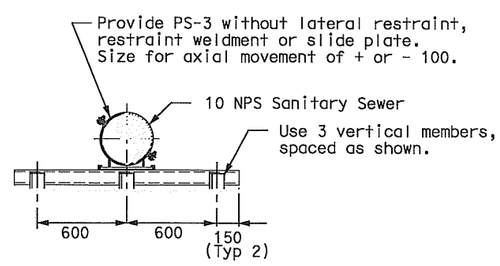

DETAIL 5

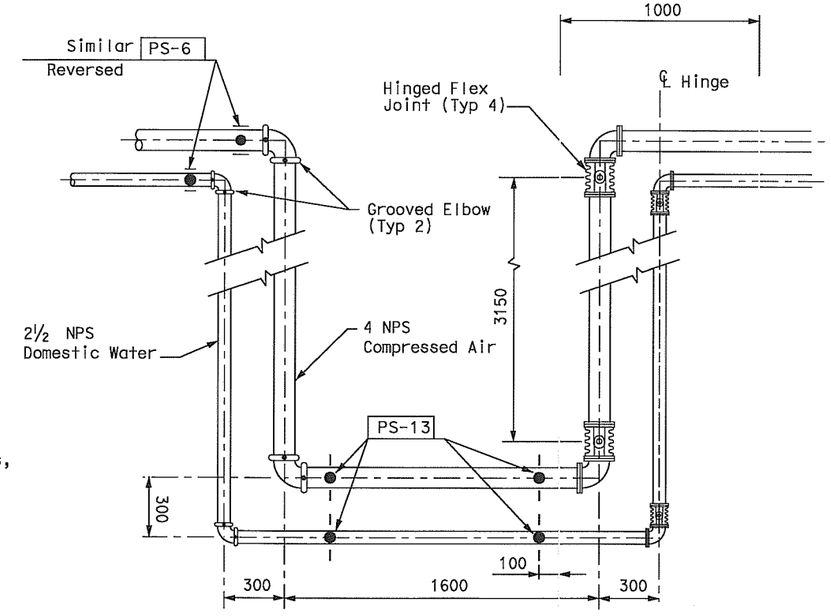

DETAIL 2

EXPANSION JOINTS FOR HINGE A

DETAIL 1 / M-10

MARK	DATE	DESCRIPTIONS	BY	CK	CCO
1	9/05/07	Mechanical Modifications	BM	RM	31

REVISIONS

CONTRACT CHANGE ORDER NO. 31
SHEET 10 OF 20

ALL DIMENSIONS IN MILLIMETERS UNLESS OTHERWISE SHOWN

FOR REDUCED PLANS ORIGINAL 0 20 40 60 80

MECHANICAL PIPING SECTIONS AND DETAILS NO. 5

NO SCALE

M-15

REVISED BY	DATE REVISED
BM	10/31/02
KH	11/15/02

CALCULATED/DESIGNED BY
CHECKED BY

PROJECT ENGINEER Rich Newell

STATE OF CALIFORNIA - DEPARTMENT OF TRANSPORTATION

Caltrans

LAST REVISION

DIST	COUNTY	ROUTE	KILOMETER POST TOTAL PROJECT	SHEET No	TOTAL SHEETS
04	SF	80	13.2/13.9	52R1	1204

Bobby J. Melvin 12/19/2002
REGISTERED MECHANICAL ENGINEER DATE

12-6-04
PLANS APPROVAL DATE

REGISTERED PROFESSIONAL ENGINEER Bobby J. Melvin No. 28685 Exp. 6/30/09 MECHANICAL STATE OF CALIFORNIA

PARSONS BRINCKERHOFF QUADE & DOUGLAS, INC.
303 SECOND STREET, SUITE 700 N
SAN FRANCISCO, CA 94107

The State of California or its officers or agents shall not be responsible for the accuracy or completeness of electronic copies of this plan sheet.

To get to the web site, go to http://www.dot.ca.gov

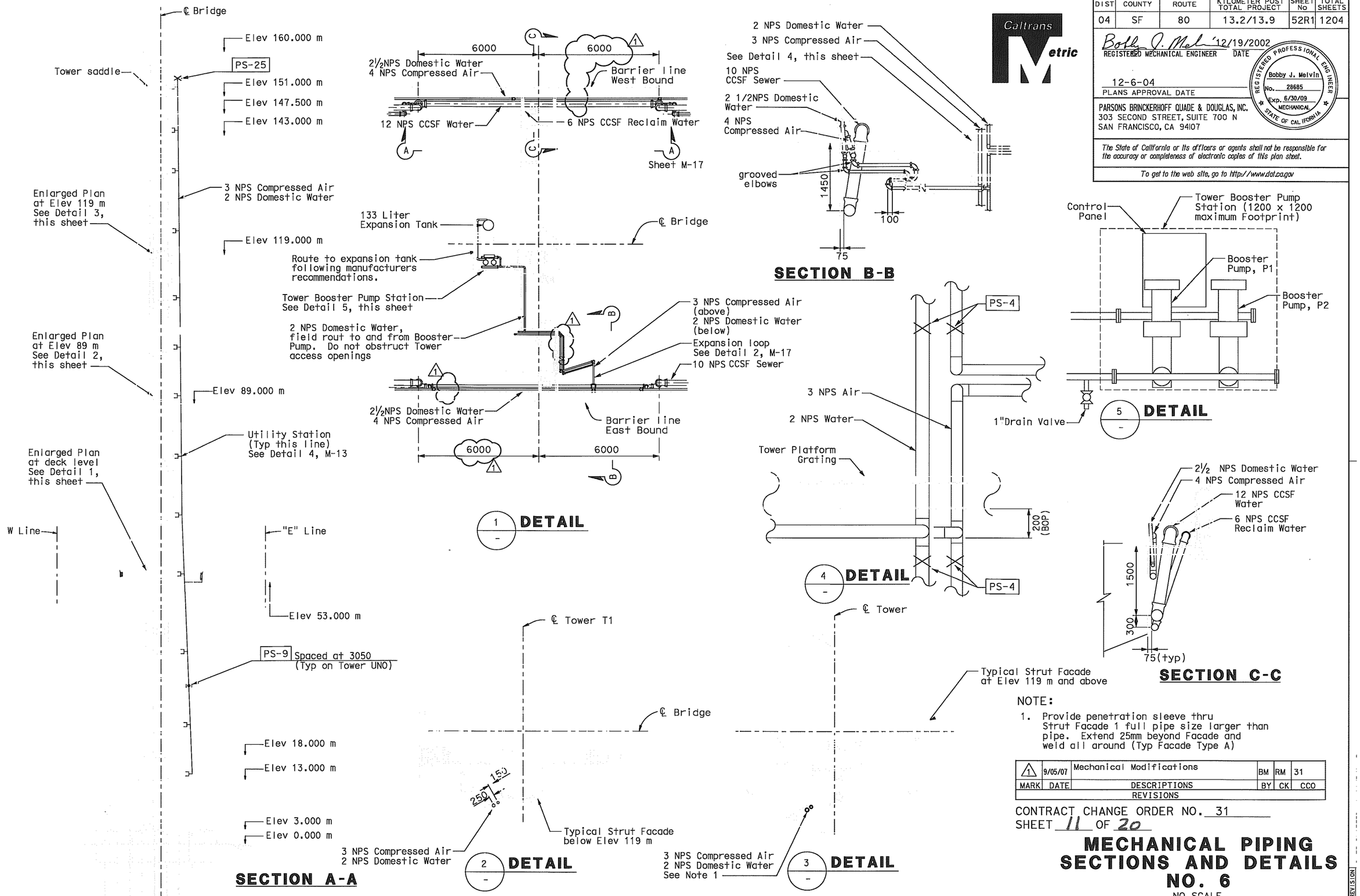

NOTE:

1. Provide penetration sleeve thru Strut Facade 1 full pipe size larger than pipe. Extend 25mm beyond Facade and weld all around (Typ Facade Type A)

MARK	DATE	DESCRIPTIONS	BY	CK	CCO
1	9/05/07	Mechanical Modifications	BM	RM	31

REVISIONS

CONTRACT CHANGE ORDER NO. 31
SHEET 11 OF 20

MECHANICAL PIPING SECTIONS AND DETAILS NO. 6

NO SCALE

M-16

ALL DIMENSIONS IN MILLIMETERS UNLESS OTHERWISE SHOWN

FOR REDUCED PLANS ORIGINAL 0 20 40 60 80

DATE	REVISED BY	DATE REVISED
10/31/02	BM	11/15/02 KH

CALCULATED/DESIGNED BY
CHECKED BY

PROJECT ENGINEER Rich Newell

STATE OF CALIFORNIA - DEPARTMENT OF TRANSPORTATION

Caltrans

F:\3103K/DGN/CONTRACT1/13103M1016.dgn 6-21-01

LAST REVISION

DIST	COUNTY	ROUTE	KILOMETER POST TOTAL PROJECT	SHEET No	TOTAL SHEETS
04	SF	80	13.2/13.9	53R1	1204

Bobby J. Melvin 12/19/2002
REGISTERED MECHANICAL ENGINEER DATE

12-6-04
PLANS APPROVAL DATE

REGISTERED PROFESSIONAL ENGINEER Bobby J. Melvin No. 28685 Exp. 6/30/09 MECHANICAL STATE OF CALIFORNIA

PARSONS BRINCKERHOFF QUADE & DOUGLAS, INC.
303 SECOND STREET, SUITE 700 N
SAN FRANCISCO, CA 94107

The State of California or its officers or agents shall not be responsible for the accuracy or completeness of electronic copies of this plan sheet.

To get to the web site, go to http://www.dot.ca.gov

Caltrans Metric

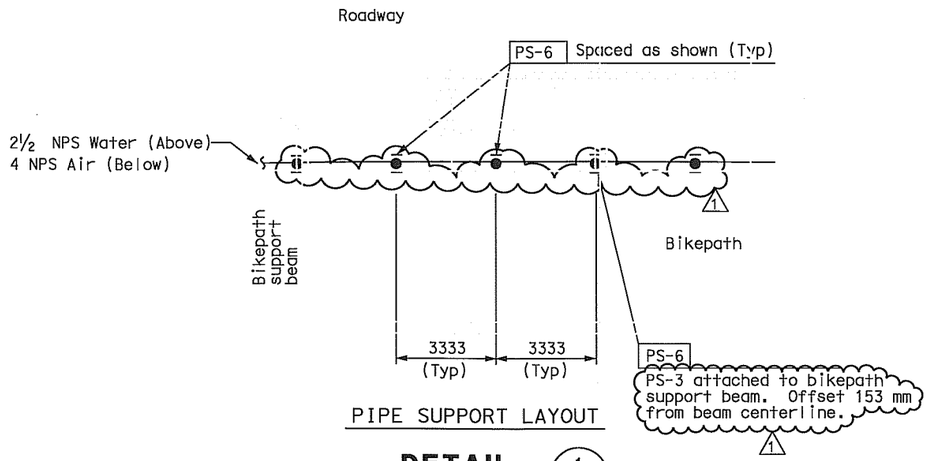

PIPE SUPPORT LAYOUT

DETAIL 1 / M-5 thru 10

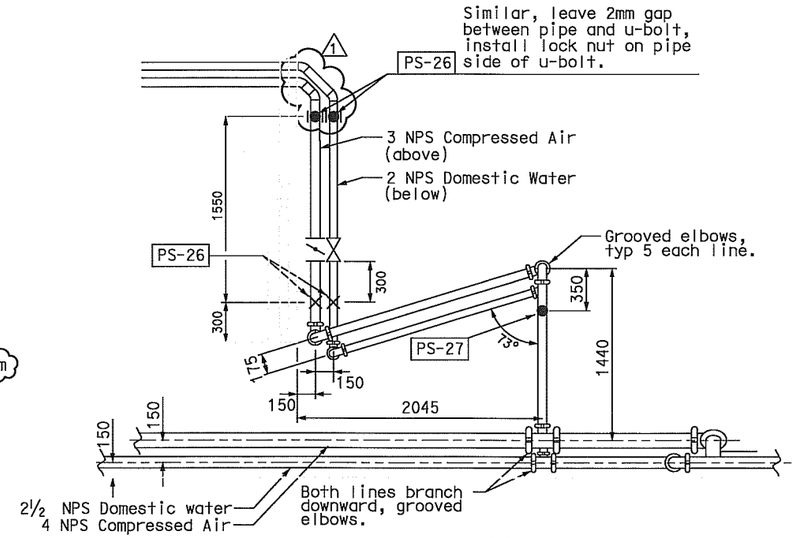

DETAIL 2 / M-16

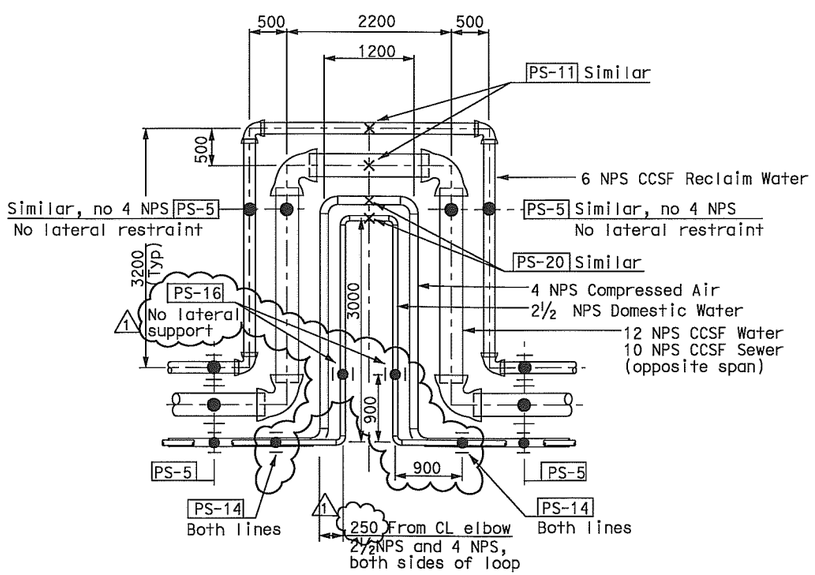

DETAIL 3 / M-16
Similar for Eastbound except mirrored

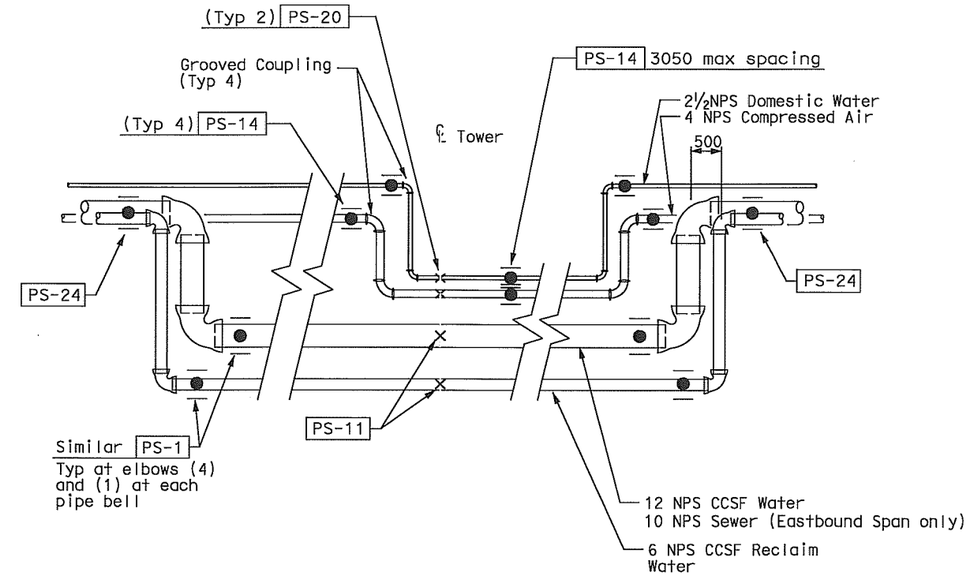

SECTION A / M-16
Pipe Support layout similar for Eastbound Span

MARK	DATE	DESCRIPTIONS	BY	CK	CCO
1	9/05/07	Mechanical Modifications	BM	RM	31

REVISIONS

CONTRACT CHANGE ORDER NO. 31
SHEET 12 OF 20

MECHANICAL PIPING SECTIONS & DETAILS NO.7

NO SCALE

M-17

REVISED BY	DATE REVISED
BM	10/31/02
KH	11/15/02

CALCULATED/DESIGNED BY
CHECKED BY

PROJECT ENGINEER Rich Newell

STATE OF CALIFORNIA - DEPARTMENT OF TRANSPORTATION
Caltrans

LAST REVISION

FOR REDUCED PLANS ORIGINAL 0 20 40 60 80

DIST	COUNTY	ROUTE	KILOMETER POST TOTAL PROJECT	SHEET No	TOTAL SHEETS
04	SF	80	13.2/13.9	54R1	1204

Bobby J. Melvin 12/19/2002
REGISTERED MECHANICAL ENGINEER DATE

12-6-04
PLANS APPROVAL DATE

REGISTERED PROFESSIONAL ENGINEER Bobby J. Melvin No. 28685 Exp. 6/30/09 MECHANICAL STATE OF CALIFORNIA

PARSONS BRINCKERHOFF QUADE & DOUGLAS, INC.
303 SECOND STREET, SUITE 700 N
SAN FRANCISCO, CA 94107

The State of California or its officers or agents shall not be responsible for the accuracy or completeness of electronic copies of this plan sheet.

To get to the web site, go to http://www.dot.ca.gov

Table for PS-1

PIPE	"A"	"B"	"C"	Values for PS-3 Vert. (kg)	Lat. (kg)	Move. (mm)
2½NPS Water	W150X22	2	6	70	45	±38
4 NPS Air	W150X22	2	6	130	80	±38
6 NPS Water	W150X30	3	6	450	200	±38
10 NPS Sewer	W150X30	3	6	1000	440	±38
12 NPS Water	W150X30	3	6	1300	600	±38

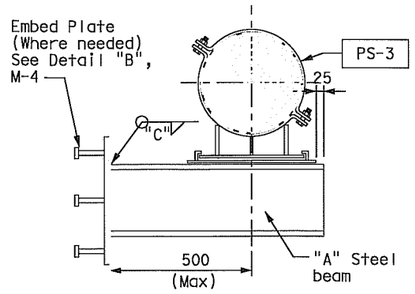

PIPE SUPPORT DETAIL PS-1

Table for PS-2

PIPE SIZE	ROD STIFFENER SIZE	ROD SIZE	CLAMP RATING (KG)	MIN. CLAMP WIDTH	"W"	"Y"	"A"	"B"
6 NPS	L 50X50X9.5	16	600	65	6	4-12	2	2
10,12 NPS	L 75X75X6.4	19	1230	80	6	4-12	2	2

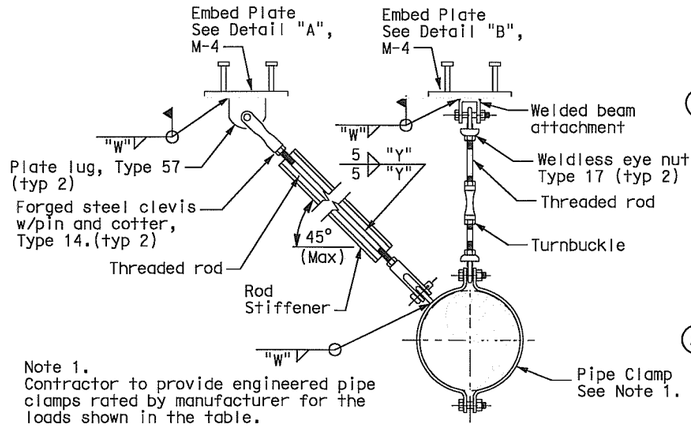

Note 1.
Contractor to provide engineered pipe clamps rated by manufacturer for the loads shown in the table.

PIPE SUPPORT DETAIL PS-2

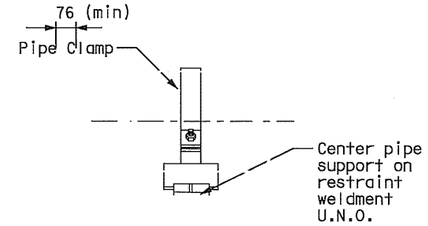

SECTION A-A

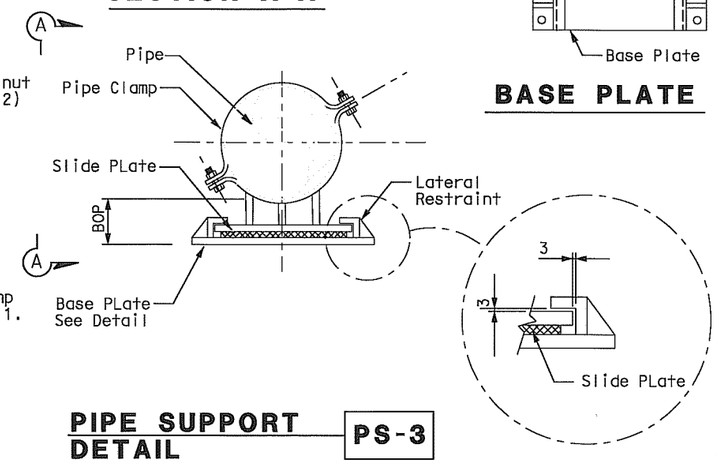

PIPE SUPPORT DETAIL PS-3

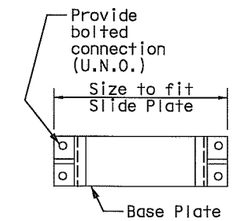

BASE PLATE

MARK	DATE	DESCRIPTIONS	BY	CK	CCO
1	9/05/07	Mechanical Modifications	BM	RM	31

REVISIONS

CONTRACT CHANGE ORDER NO. 31
SHEET 13 OF 20

Table for PS-3 to be used with PS-5

PIPE	Vert. Load (kg)	Lat. Load (kg)	Axial Move. (mm)
4 NPS Air	130	80	±38
6 NPS Water	450	200	±38
10 NPS Sewer	1000	440	±38
12 NPS Water	1300	600	±38

NOTES FOR PS-3

1. Contractor to provide engineered supports rated by manufacturer for the loads and movements shown in the details.
2. Support configuration shown is intended to illustrate general form of support. Actual configurations may vary depending on manufacturer, loads and movements.
3. Slide pads shall be Teflon or Ultra-HDPE running on a stainless steel plate.
4. Submit product data for each support. Each support shall be identified by a unique support model number corresponding to performance data from the manufacturer.
5. Pipe support loads act on pipe centerline.
6. Slide plates not required on supports for piping 6 NPS and smaller.
7. Minimum clamp width for use with ductile iron pipe = 75 mm U.N.O.

GENERAL NOTES FOR PIPE SUPPORTS

1. For piping outside of bridge girder, all steel surfaces of pipe supports and components shall be hot dip galvanized except supplementary steel members attached to bridge structure and components requiring field welding. Pipe supports inside bridge girder shall be painted.
2. All manufactured support components shall be load rated by manufacturer.
3. Expand all grooved and restrained joint couplings prior to setting pipe clamp locations.
4. All supports shall meet the requirements of applicable MSS Standards
5. Provide all necessary nuts, bolts, pins washers etc. to complete pipe support assemblies.
6. Holes for bolts, pins etc. shall not be torch cut unless approved by engineer.
7. All welding for pipe supports shall be per project welding specification and vendor instructions.
8. "Type" Designation for manufactured hanger components refers to MSS-SP69.
9. Support components welded to embed plates shall be centered on embed plates, U.N.O.
10. For embed plate details see drawing M-4.
11. Maintain minimum 200 mm clearance between pipe rolls and piping obstructions, ie; pipe bells, welds, branches etc.
12. Pipe supports shall not be field welded to steel box girder. All welding to girders shall be shop weld.

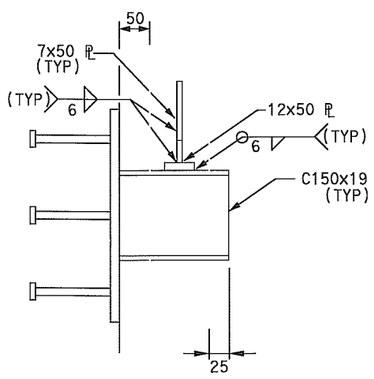

SECTION C-C

Table for PS-6

Pipe	"A"	Data for PS-3 Vert. Load (kg)	Lat. Load (kg)	Axial Move (mm)
2½ NPS	L51x51x7.9	50	25	38
4 NPS	C75x6	110	55	38

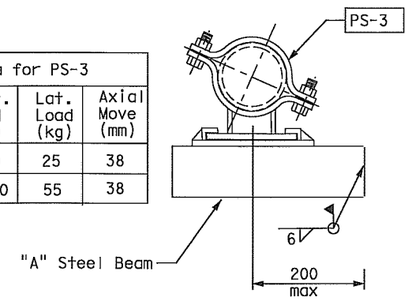

PIPE SUPPORT DETAIL PS-6

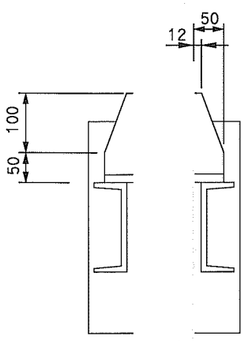

SECTION B-B

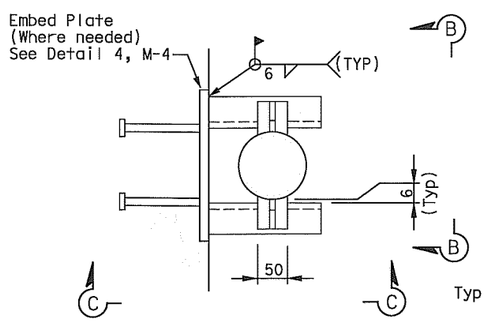

PIPE SUPPORT DETAIL PS-4

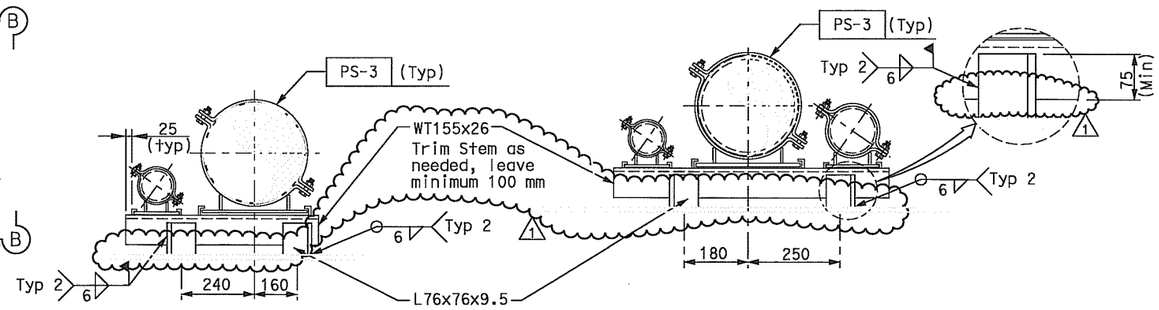

EASTBOUND **WESTBOUND**

PIPE SUPPORT DETAIL PS-5

ALL DIMENSIONS IN MILLIMETERS UNLESS OTHERWISE SHOWN

MECHANICAL PIPE SUPPORT DETAILS NO. 1

NO SCALE

M-18

PROJECT ENGINEER Rich Newell

STATE OF CALIFORNIA - DEPARTMENT OF TRANSPORTATION

Caltrans

CALCULATED/ DESIGNED BY	CHECKED BY	REVISED BY	DATE REVISED
BM	KH	DATE 10/31/02	DATE REVISED 11/15/02

LAST REVISION

FOR REDUCED PLANS ORIGINAL 0 20 40 60 80

DIST	COUNTY	ROUTE	KILOMETER POST TOTAL PROJECT	SHEET No	TOTAL SHEETS
04	SF	80	13.2/13.9	55R1	1204

Bobby J. Melvin 12/19/2002
REGISTERED MECHANICAL ENGINEER DATE

12-6-04
PLANS APPROVAL DATE

REGISTERED PROFESSIONAL ENGINEER Bobby J. Melvin No. 28685 Exp. 6/30/09 MECHANICAL STATE OF CALIFORNIA

PARSONS BRINCKERHOFF QUADE & DOUGLAS, INC.
303 SECOND STREET, SUITE 700 N
SAN FRANCISCO, CA 94107

The State of California or its officers or agents shall not be responsible for the accuracy or completeness of electronic copies of this plan sheet.

To get to the web site, go to http://www.dot.ca.gov

Caltrans Metric

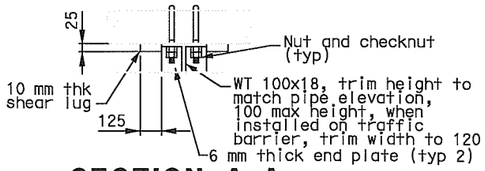

SECTION A-A

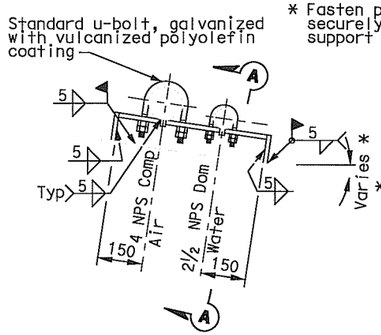

PIPE SUPPORT DETAIL PS-7

Table for PS-8

Pipe	"A"	"B"	"C"
6 NPS Reclaim Water	W250x49x250long	3	16 mm,ASTM A325
10 NPS Sewer	W250x73x355long	1	19 mm,ASTM A325
12 NPS Water	W250x73x355long	1	19 mm,ASTM A325

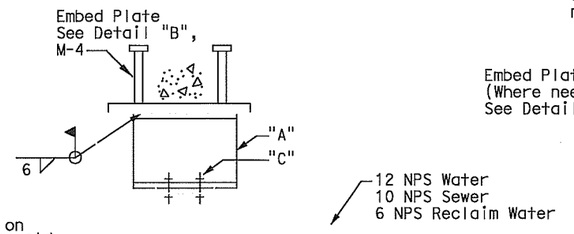

PIPE SUPPORT DETAIL PS-8

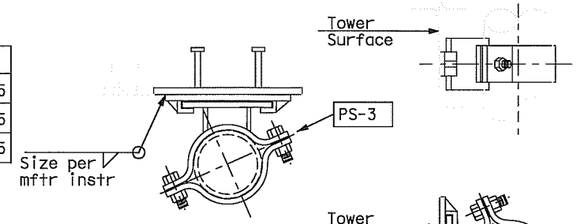

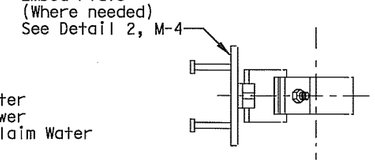

PIPE SUPPORT DETAIL PS-9 (Attachment to Concrete)

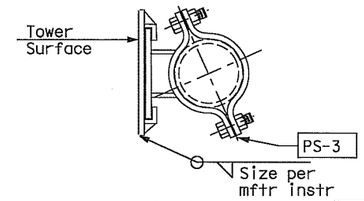

PIPE SUPPORT DETAIL PS-9 (Attachment to Tower)

Table for PS-3 to use with PS-9

Pipe	Vert. Load (kg)	Lat. Load (kg)	Axial Move (mm)
2 NPS	-	30	38
2½ NPS	-	30	38
3 NPS	-	40	38
4 NPS	-	60	38

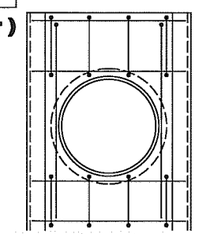

SECTION D-D

East Bound

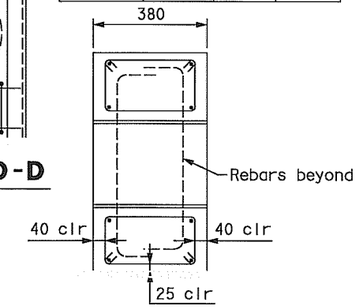

SECTION E-E

Table for PS-10

PIPE	"A"	"B"	"C"	"D"
6 NPS Reclaim Water	W200X36	4	6	19 mm BOLT - ASTM A325
10 NPS Sewer	W200X46	3	6	19 mm BOLT - ASTM A325
12 NPS Water	W200X46	3	6	19 mm BOLT - ASTM A325

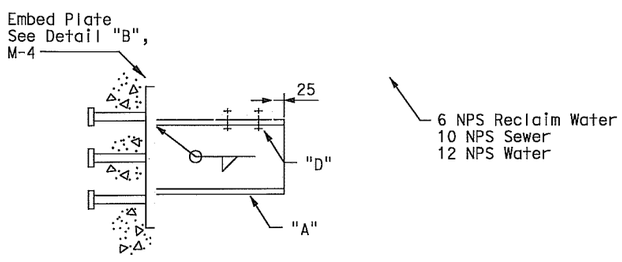

PIPE SUPPORT DETAIL PS-10

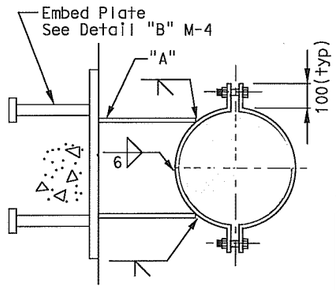

SECTION C-C

Table for PS-11

Pipe	"A"	"B"	"C"
6 NPS Reclaim Water	W150X30	4	13
10 NPS Sewer	W200X46	4	13
12 NPS Water	W200X46	4	13

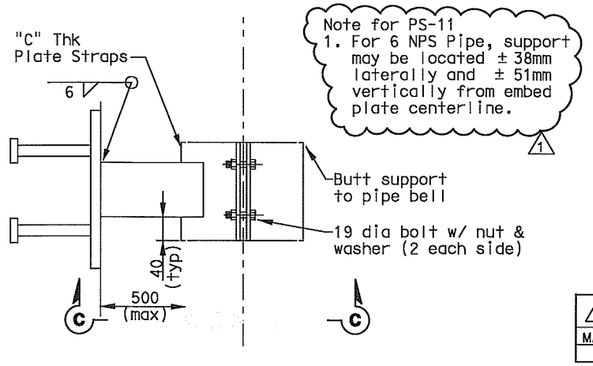

Note for PS-11
1. For 6 NPS Pipe, support may be located ± 38mm laterally and ± 51mm vertically from embed plate centerline.

PIPE SUPPORT DETAIL PS-11

Thrust Collar for PS-12

Pipe	Axial Load Rating (kg)
6 NPS	6,000
10 NPS	13,000
12 NPS	18,000

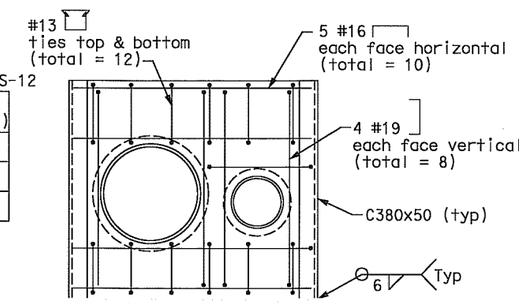

SECTION D-D

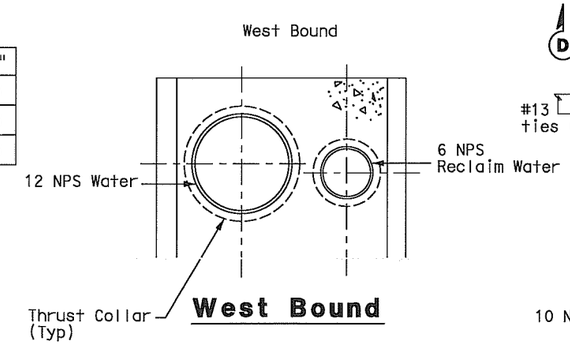

West Bound

PIPE SUPPORT DETAIL PS-12

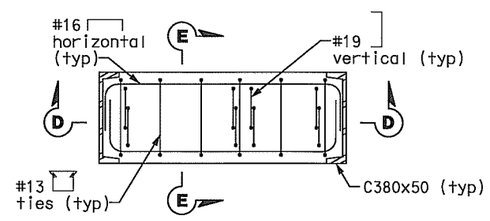

PLAN NEAR TOP

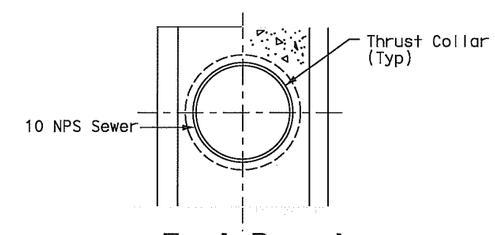

East Bound

MARK	DATE	DESCRIPTIONS	BY	CK	CCO
1	9/05/07	Mechanical Modifications	BM	RM	31

REVISIONS

CONTRACT CHANGE ORDER NO. 31
SHEET 14 OF 20

MECHANICAL PIPE SUPPORT DETAILS No. 2

NO SCALE

M-19

ALL DIMENSIONS IN MILLIMETERS UNLESS OTHERWISE SHOWN

FOR REDUCED PLANS ORIGINAL 0 20 40 60 80

REVISED BY	DATE REVISED
BM	KH
DATE 10/31/02	11/15/02

CALCULATED/DESIGNED BY BM
CHECKED BY KH

PROJECT ENGINEER Rich Newell

STATE OF CALIFORNIA - DEPARTMENT OF TRANSPORTATION
Caltrans

LAST REVISION

DIST	COUNTY	ROUTE	KILOMETER POST TOTAL PROJECT	SHEET No	TOTAL SHEETS
04	SF	80	13.2/13.9	56R1	1204

Bobby J. Melvin 12/19/2002
REGISTERED MECHANICAL ENGINEER DATE

12-6-04
PLANS APPROVAL DATE

REGISTERED PROFESSIONAL ENGINEER Bobby J. Melvin No. 28685 Exp. 6/30/09 MECHANICAL STATE OF CALIFORNIA

PARSONS BRINCKERHOFF QUADE & DOUGLAS, INC.
303 SECOND STREET, SUITE 700 N
SAN FRANCISCO, CA 94107

The State of California or its officers or agents shall not be responsible for the accuracy or completeness of electronic copies of this plan sheet.

Caltrans now has a web site! To get to the web site, go to http://www.dot.ca.gov

Caltrans Metric

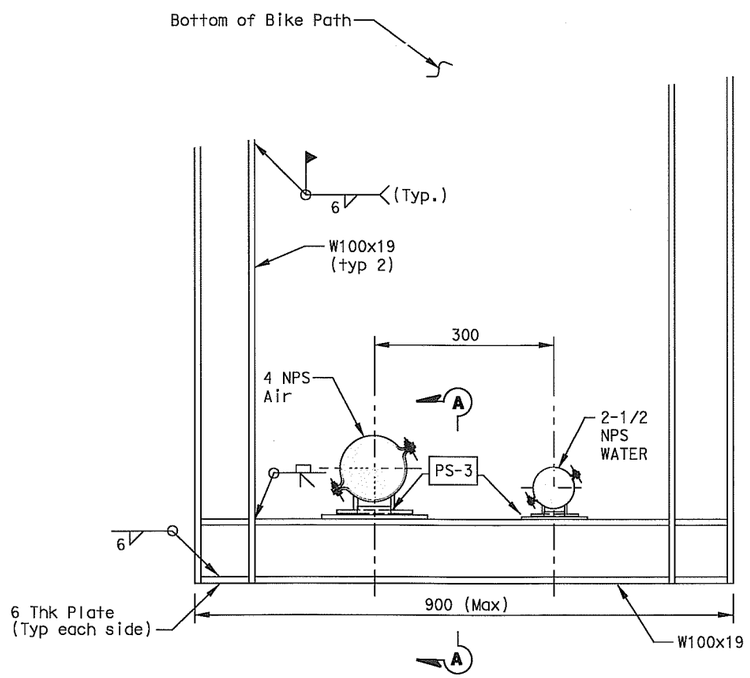

PIPE SUPPORT DETAIL PS-13

Table for PS-3 to be used with PS-14

PIPE	Vert. Load (kg)	Lat. Load (kg)	Axial Move. (mm)
2½ NPS Water	70	45	±38
4 NPS Air	130	80	±38

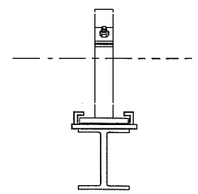

SECTION A-A

Table for PS-3 to be used with PS-13

PIPE	BOP	Vert. Load (kg)	Long. Load (kg)
2-1/2 NPS Water	75	80	45
4 NPS Water	25	145	85

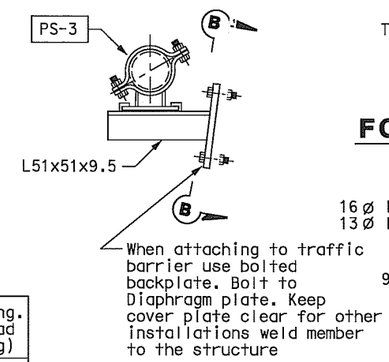

PIPE SUPPORT DETAIL PS-14

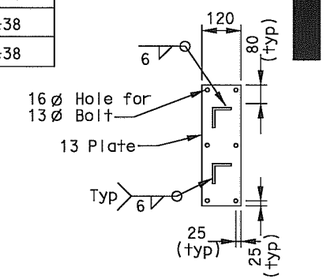

FOR TWO PIPES

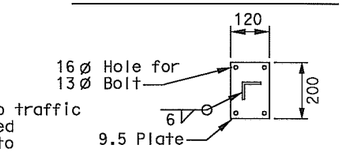

SECTION B-B

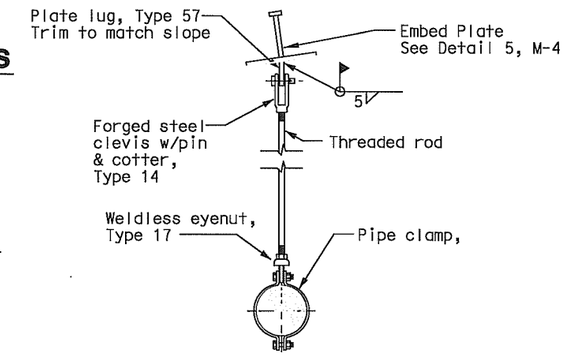

PIPE SUPPORT DETAIL PS-15

Table for PS-3 to be used with PS-16

PIPE	Vert. Load (kg)	Long. Load (kg)	Lat Move. (mm)
2 NPS Water	50	50	38
2-1/2 NPS Water	70	70	38
3 NPS Air	90	70	38
4 NPS Air	130	130	38

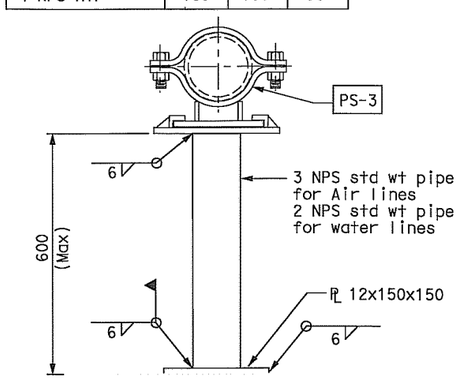

PIPE SUPPORT DETAIL PS-16

Table for PS-3 to be used with PS-17

PIPE	Vert. Load (kg)	Lat. Load (kg)	Axial Move. (mm)
2½ NPS Dom Water	70	73	25
4 NPS Comp Air	130	140	25
6 NPS Sewer	340	340	25
10 NPS Sewer	650	720	25
12 NPS Water	900	1000	25

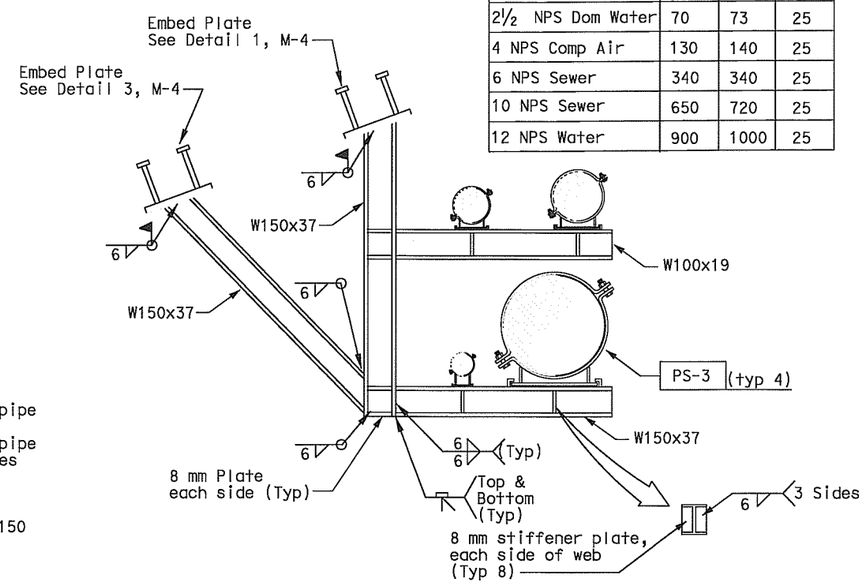

PIPE SUPPORT DETAIL PS-17

Table for PS-3 to be used with PS-18

PIPE	Vert. Load (kg)	Lat. Load (kg)	Axial Move. (mm)
2½ NPS Dom Water	70	45	25
4 NPS Comp Air	130	80	25
6 NPS Sewer	340	160	25
10 NPS Sewer	650	340	25
12 NPS Water	900	500	25

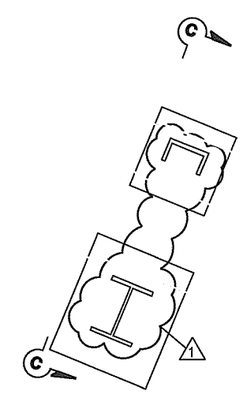

PIPE SUPPORT DETAIL PS-18

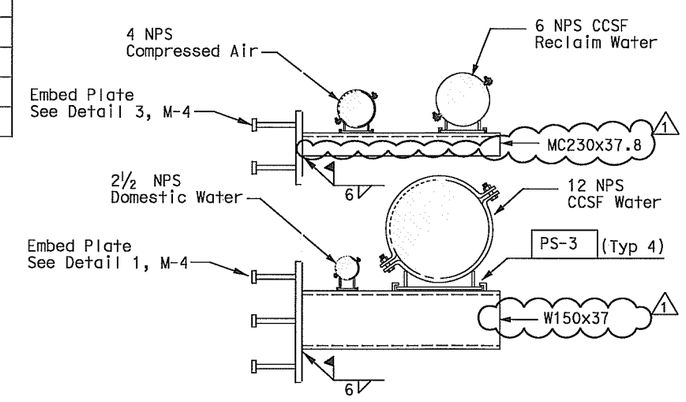

SECTION C-C

MARK	DATE	DESCRIPTIONS	BY	CK	CCO
1	9/05/07	Mechanical Modifications	BM	RM	31

REVISIONS

CONTRACT CHANGE ORDER NO. 31
SHEET 15 OF 20

ALL DIMENSIONS IN MILLIMETERS UNLESS OTHERWISE SHOWN

MECHANICAL PIPE SUPPORT DETAILS NO. 3

NO SCALE

M-20

CALCULATED/ DESIGNED BY	BM	DATE 10/31/02	REVISED BY
CHECKED BY	KH	11/15/02	DATE REVISED

PROJECT ENGINEER Rich Newell

STATE OF CALIFORNIA - DEPARTMENT OF TRANSPORTATION

Caltrans

LAST REVISION

FOR REDUCED PLANS ORIGINAL 0 20 40 60 80

DIST	COUNTY	ROUTE	KILOMETER POST TOTAL PROJECT	SHEET No	TOTAL SHEETS
04	SF	80	13.2/13.9	57R1	1204

Bobby J. Melvin 12/19/2002
REGISTERED MECHANICAL ENGINEER DATE

12-6-04
PLANS APPROVAL DATE

REGISTERED PROFESSIONAL ENGINEER Bobby J. Melvin No. 28685 Exp. 6/30/09 MECHANICAL STATE OF CALIFORNIA

PARSONS BRINCKERHOFF QUADE & DOUGLAS, INC.
303 SECOND STREET, SUITE 700 N
SAN FRANCISCO, CA 94107

The State of California or its officers or agents shall not be responsible for the accuracy or completeness of electronic copies of this plan sheet.

Caltrans now has a web site! To get to the web site, go to http://www.dot.ca.gov

Caltrans Metric

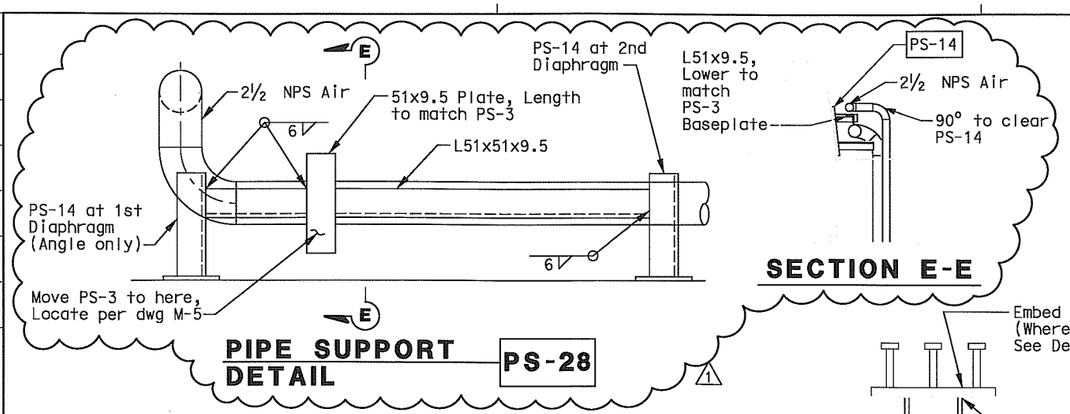

PIPE SUPPORT DETAIL PS-28

SECTION E-E

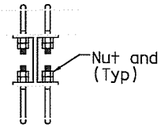

SECTION A-A

Table for PS-3 to be used with PS-21

PIPE	Vert. Load (kg)	Lat. Load (kg)	Axial Move. (mm)
2½ NPS Dom Water	70	45	38
4 NPS Comp Air	130	80	38

Table for PS-3 to be used with PS-19

PIPE	Vert. Load (kg)	Lat. Load (kg)	Axial Load (kg)
2½ NPS Dom Water	70	45	95
4 NPS Comp Air	130	80	190

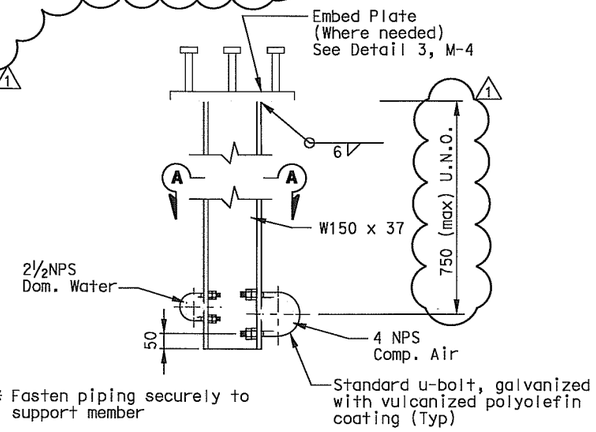

* Fasten piping securely to support member

PIPE SUPPORT DETAIL PS-20

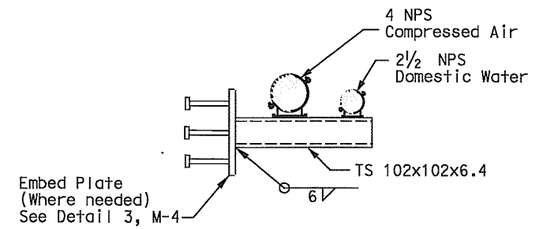

SECTION C-C

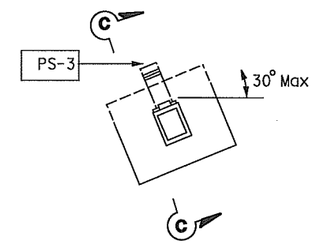

PIPE SUPPORT DETAIL PS-21

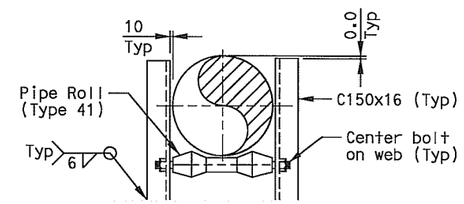

PIPE SUPPORT DETAIL PS-22

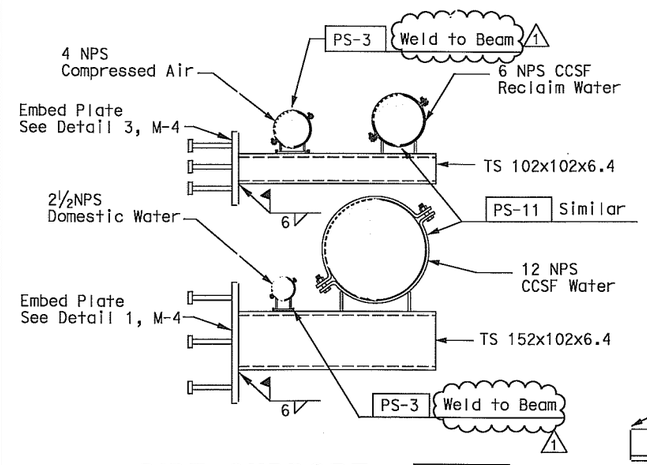

PIPE SUPPORT DETAIL PS-19

Table for PS-25

Pipe Size	Rod Size (mm)	"A"	"B"	"W"	"Y"	Vertical Travel (mm)	Hot Load (kg)	Cold Load (kg)
2 NPS	16	W150x22	50	6	6	25	365	415
3 NPS	19	W150x22	75	6	6	31	545	615

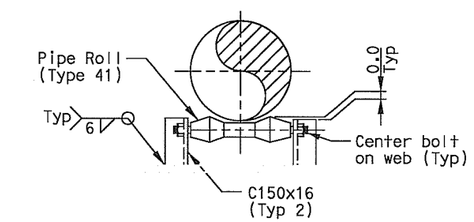

PIPE SUPPORT DETAIL PS-23

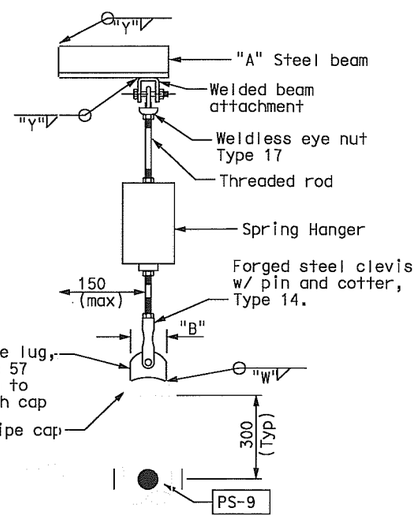

PIPE SUPPORT DETAIL PS-25

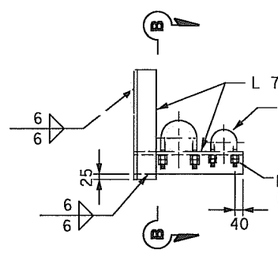

PIPE SUPPORT DETAIL PS-26

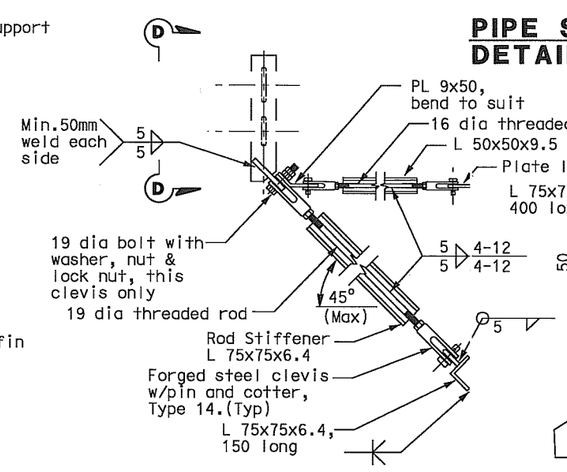

PIPE SUPPORT DETAIL PS-27

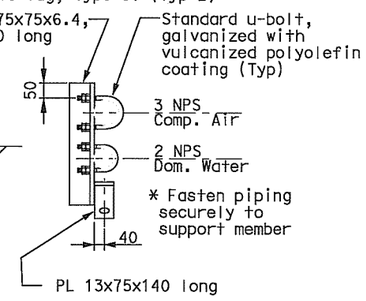

SECTION D-D

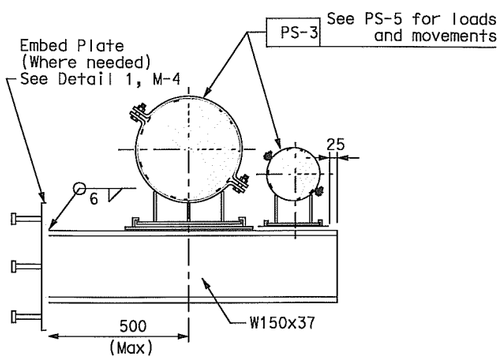

PIPE SUPPORT DETAIL PS-24

MARK	DATE	DESCRIPTIONS	BY	CK	CCO
1	9/05/07	Mechanical Modifications	BM	RM	31

REVISIONS

CONTRACT CHANGE ORDER NO. 31
SHEET 16 OF 20

ALL DIMENSIONS IN MILLIMETERS UNLESS OTHERWISE SHOWN

MECHANICAL PIPE SUPPORT DETAILS NO. 4

NO SCALE

M-21

REVISED BY	DATE	DATE REVISED
BM	10/31/02	11/15/02

CALCULATED/DESIGNED BY: BM
CHECKED BY: KH

PROJECT ENGINEER: Rich Newell

STATE OF CALIFORNIA - DEPARTMENT OF TRANSPORTATION
Caltrans

FOR REDUCED PLANS ORIGINAL 0 20 40 60 80

LAST REVISION

DIST.	COUNTY	ROUTE	KILOMETER POST TOTAL PROJECT	SHEET NO.	TOTAL SHEETS
04	SF	80	13.2/13.9	897R1	1204

REGISTERED ENGINEER - CIVIL

12-6-04
PLANS APPROVAL DATE

Tien Hung Ho
No. C 43990
Exp. 6/03/09
CIVIL
STATE OF CALIFORNIA

The State of California or its officers or agents shall not be responsible for the accuracy or completeness of electronic copies of this plan sheet.

T.Y. LIN / MOFFATT & NICHOL
825 BATTERY STREET
SAN FRANCISCO, CA 94111

To get to the web site, go to: http://www.dot.ca.gov

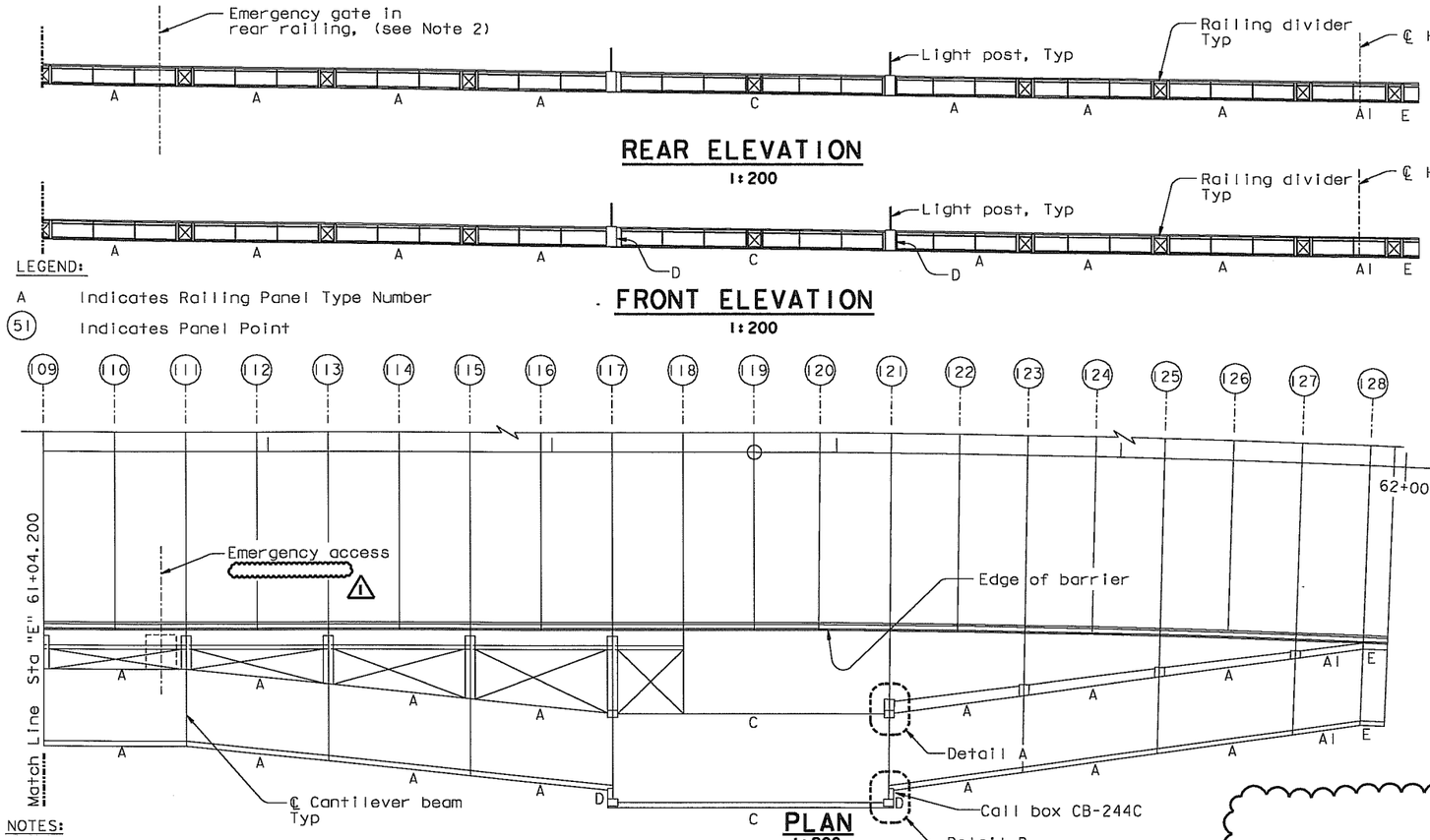

NOTES:

1. For railing panel Type A through Type E, see "Railing Details No. 1" sheet.
2. For emergency gate details, see "Railing Details No. 5" sheet.
3. For "Detail A" and "Detail B", see "Railing Details No. 4" sheet.
4. For call box location and details, see "Road Plans".

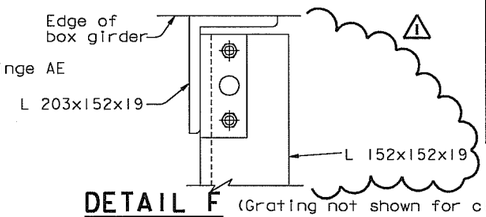

DETAIL F (Grating not shown for clarity)
1:5
(Detail F shown Detail E similar)

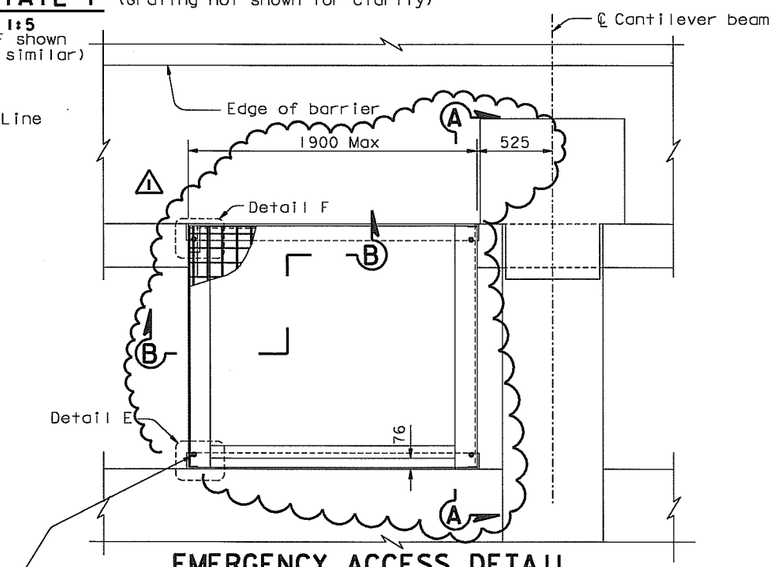

EMERGENCY ACCESS DETAIL
1:20

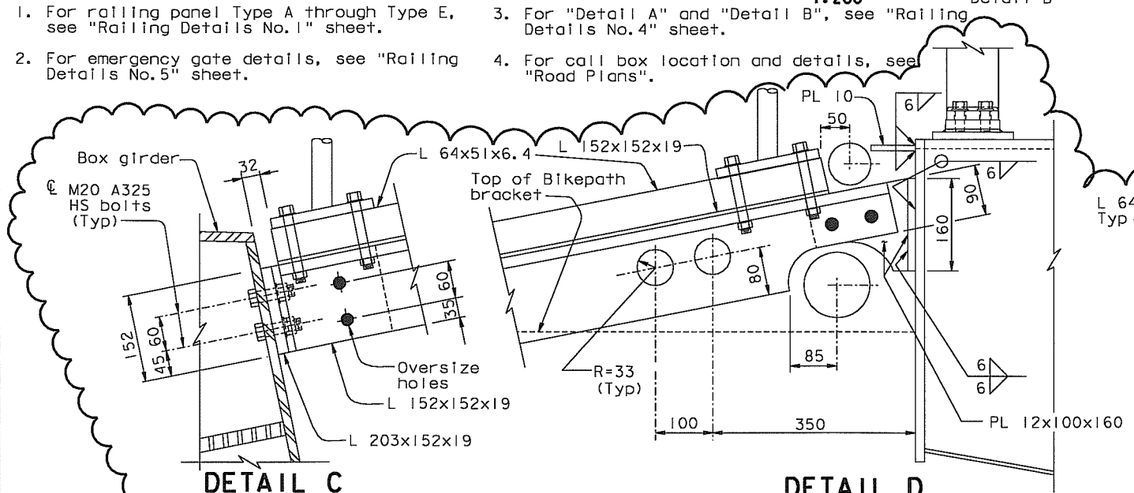

DETAIL C
1:5

DETAIL D
1:5
(Grating not shown for clarity)

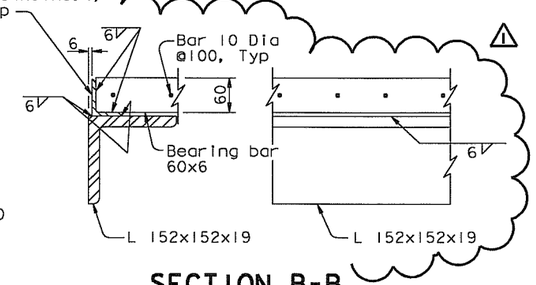

SECTION B-B
1:5

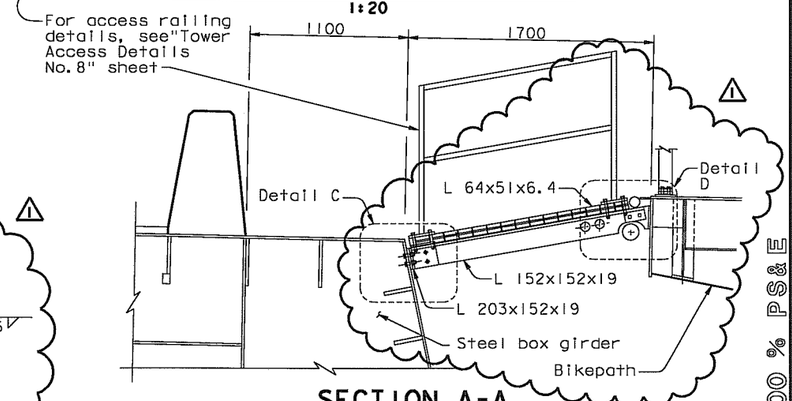

SECTION A-A
1:20

ALL DIMENSIONS ARE IN MILLIMETERS UNLESS OTHERWISE SHOWN

R. Valizadeh/V. Toan/Y.L./W.L./F.C.
DESIGN OVERSIGHT
SIGN OFF DATE 09/07/07

Rev. Date: 5-18-98

MARK	DATE	DESCRIPTIONS	BY	CH'D	CCO#
1	09/07/07	MECHANICAL MODIFICATIONS	JD	TH	31

REVISIONS

CONTRACT CHANGE ORDER NO. 31
SHEET 17 OF 20

DESIGN	BY T. Ho	CHECKED C. Redfield	
DETAILS	BY R. Xu	CHECKED C. Redfield	
QUANTITIES	BY G. Baker	CHECKED K. Cormier	

PREPARED FOR THE STATE OF CALIFORNIA DEPARTMENT OF TRANSPORTATION

R. Manzanarez
PROJECT ENGINEER

BRIDGE NO. 34-0006L/R
KILOMETER POST 13.2/13.9

SAN FRANCISCO OAKLAND BAY BRIDGE
EAST SPAN SEISMIC SAFETY PROJECT
SELF-ANCHORED SUSPENSION BRIDGE
(SUPERSTRUCTURE & TOWER)

RAILING LAYOUT NO. 3

ORIGINAL SCALE IN MILLIMETERS FOR REDUCED PLANS 0 10 20 30 40 50 60 70 80 90 100

CU 04
EA 0120F1

DISREGARD PRINTS BEARING EARLIER REVISION DATES

REVISION DATES (PRELIMINARY STAGE ONLY) 05/15/99 05/07/99 05/17/01 01/08/02 07/01/02 12/19/02

SHEET 480R1 OF

FILE => I:\bb\04-012001\sas\contract plans and cco\cco\in progress\cco=31\dgn\akrlg03.dgn

100 % PS&E

USERNAME => vlignatovsky DATE PLOTTED => 07 SEP 2007 TIME PLOTTED => 14:25:58

DIST.	COUNTY	ROUTE	KILOMETER POST TOTAL PROJECT	SHEET NO.	TOTAL SHEETS
04	SF	80	13.2/13.9	926R1	1204

REGISTERED ENGINEER - CIVIL

12-6-04
PLANS APPROVAL DATE

REGISTERED PROFESSIONAL ENGINEER Marwan N. Nader No. C 054426 Exp. 12/31/07 CIVIL STATE OF CALIFORNIA

The State of California or its officers or agents shall not be responsible for the accuracy or completeness of electronic copies of this plan sheet.

T.Y. LIN / MOFFATT & NICHOL
825 BATTERY STREET
SAN FRANCISCO, CA 94111

Caltrans now has a web site! To get to the web site, go to: http://www.dot.ca.gov

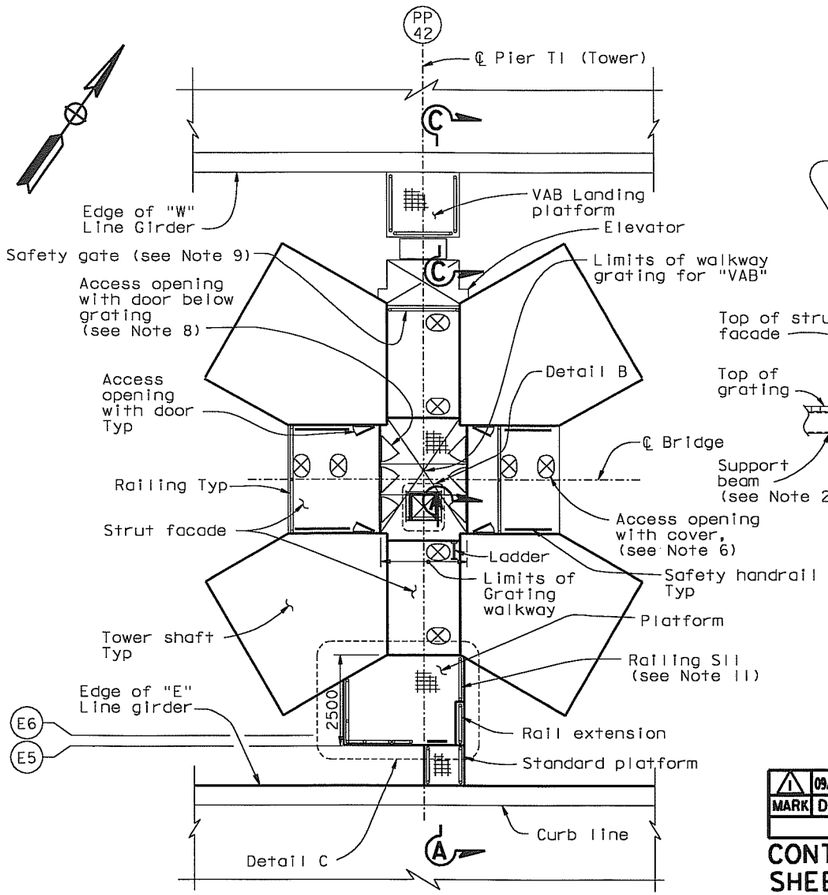

TOWER ACCESS PLATFORMS

SECTION F-F
NTS

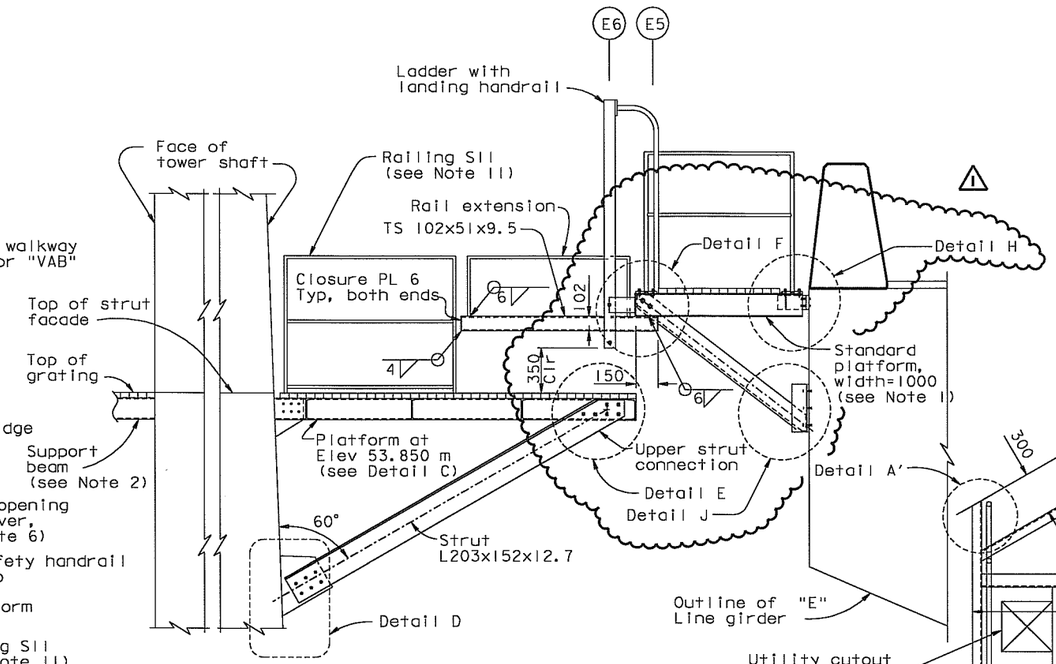

SECTION A-A
1:20

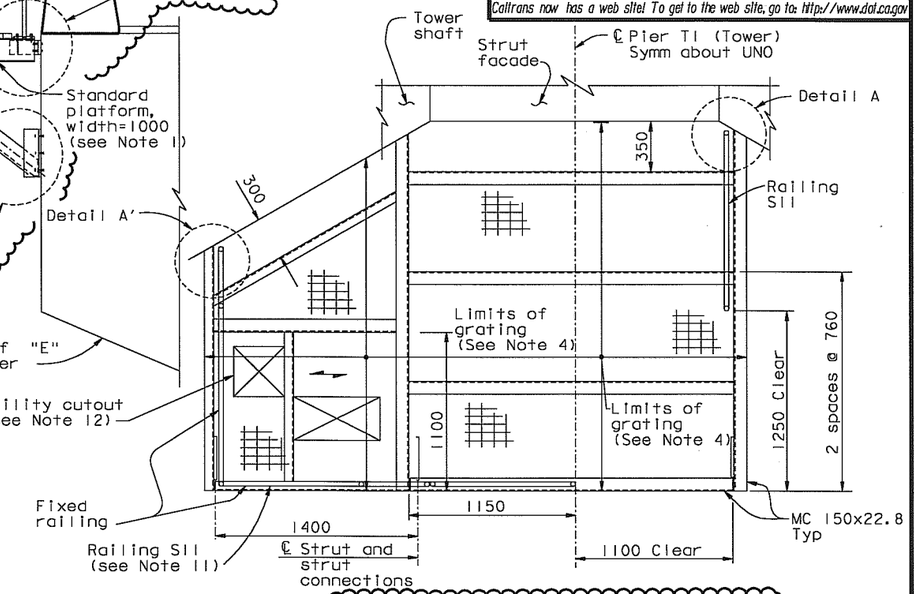

PLATFORM AT ELEV 53.850±
DETAIL C
1:20

MARK	DATE	DESCRIPTIONS	BY	CH'D	CCO#
1	09/07/07	MECHANICAL MODIFICATIONS	JD	MN	31

REVISIONS

CONTRACT CHANGE ORDER NO. 31
SHEET 18 OF 20

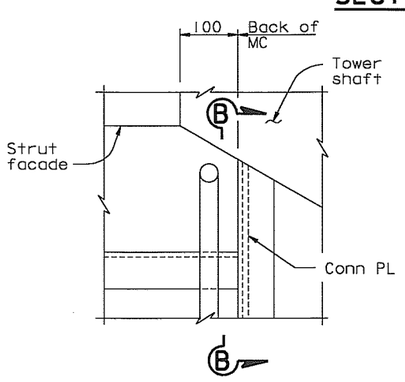

DETAIL A (Detail A shown, Detail A' similar)
1:5

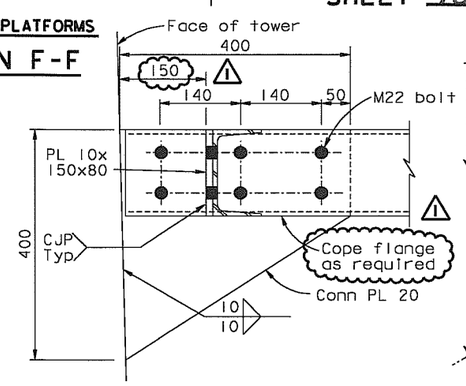

SECTION B-B
1:5

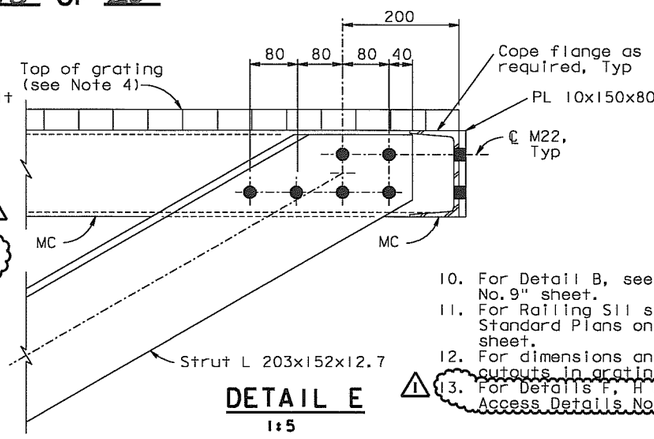

DETAIL E
1:5

LEGEND:

(E6) Girder Working Line 6 on "E" Line.

NOTES:

1. For standard platform details, see "Tower Access Details No.9" sheet.
2. For walkway support beam details, see "Tower Access Details No.3" sheet.
3. For railing details, see "Tower Access Details No.8" sheet.
4. Grating shall be galvanized steel grating with fasteners. Grating working load shall be 14.4 kN/m².
5. For Section C-C, Details D, see "Tower Access Details No. 11" sheet.
6. For access opening cover details, see "Tower Access Details No.9" sheet. All covers are with risers unless noted otherwise.
7. For location of Tower access opening in strut facade, see "Tower Strut Facade Details" sheets.
8. For access opening and door details, see "Tower Access Details No.4" sheet.
9. For safety gate details, see "Road Plans" sheets.
10. For Detail B, see "Tower Access Details No.9" sheet.
11. For Railing S11 see Index to Caltrans Standard Plans on "General Notes No.1" sheet.
12. For dimensions and locations of utility cutouts in grating, see "Road Plans".
13. For Details F, H and J, see "Tower Access Details No. 12" sheet.

ALL DIMENSIONS ARE IN MILLIMETERS UNLESS OTHERWISE SHOWN

100 % PS&E

R. Valizadeh/V. Toan/Y.L./W.L./F.C.
DESIGN OVERSIGHT
SIGN OFF DATE 09/07/07

	BY	CHECKED	
DESIGN	M. Nader	M. Gulyas	
DETAILS	G. Baker	L. Rus	
QUANTITIES	D. Turner	J. Leventini	

PREPARED FOR THE STATE OF CALIFORNIA DEPARTMENT OF TRANSPORTATION

R. Manzanarez
PROJECT ENGINEER

BRIDGE NO. 34-0006L/R
KILOMETER POST 13.2/13.9

SAN FRANCISCO OAKLAND BAY BRIDGE
EAST SPAN SEISMIC SAFETY PROJECT
SELF-ANCHORED SUSPENSION BRIDGE
(SUPERSTRUCTURE & TOWER)

TOWER ACCESS DETAILS NO. 10

Rev. Date: 5-18-98

ORIGINAL SCALE IN MILLIMETERS FOR REDUCED PLANS 0 10 20 30 40 50 60 70 80 90 100

CU 04
EA 0120F1

DISREGARD PRINTS BEARING EARLIER REVISION DATES

REVISION DATES (PRELIMINARY STAGE ONLY) 05/13/99 08/27/99 05/31/01 04/08/02 07/24/02 12/19/02

SHEET 509R1 OF

FILE => L:\BB\04-012001\SAS\Contract Plans and CCO\CCO\In Progress\CCO#31\DGN\akacc09.dgn

USERNAME => vignatovsky DATE PLOTTED => 10 SEP 2007 TIME PLOTTED => 09:42:57

DIST.	COUNTY	ROUTE	KILOMETER POST TOTAL PROJECT	SHEET NO.	TOTAL SHEETS
04	SF	80	13.2/13.9	927R1	1204

REGISTERED ENGINEER - CIVIL

12-6-04
PLANS APPROVAL DATE

REGISTERED PROFESSIONAL ENGINEER Marwan N. Nader No. C 54426 Exp. 12/31/07 CIVIL STATE OF CALIFORNIA

The State of California or its officers or agents shall not be responsible for the accuracy or completeness of electronic copies of this plan sheet.

T.Y. LIN / MOFFATT & NICHOL
825 BATTERY STREET
SAN FRANCISCO, CA 94111

Caltrans now has a web site! To get to the web site, go to: http://www.dot.ca.gov

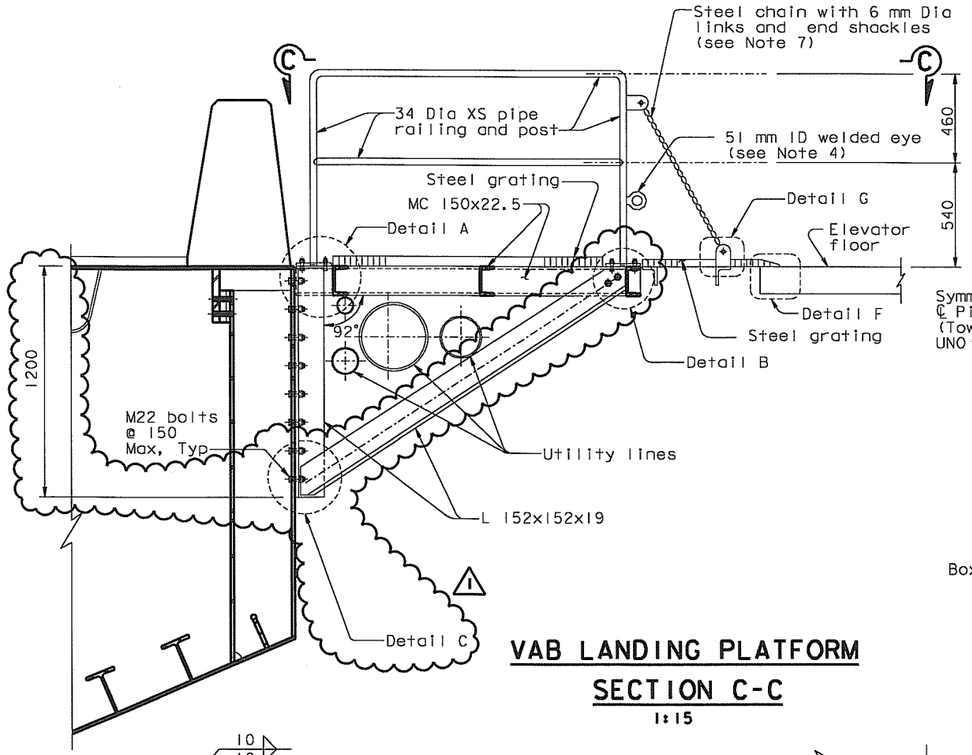

VAB LANDING PLATFORM SECTION C-C
1:15

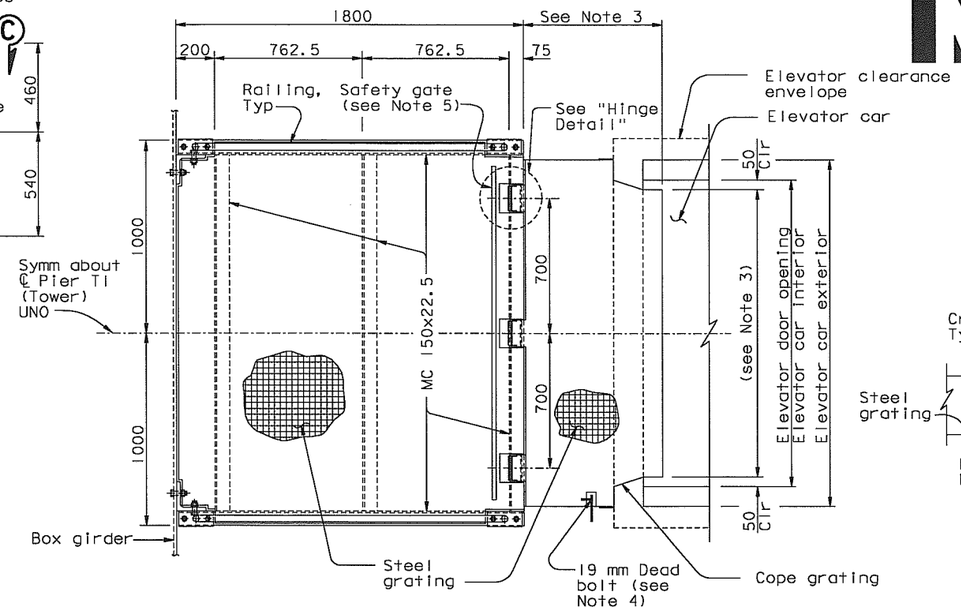

VIEW C-C
1:15

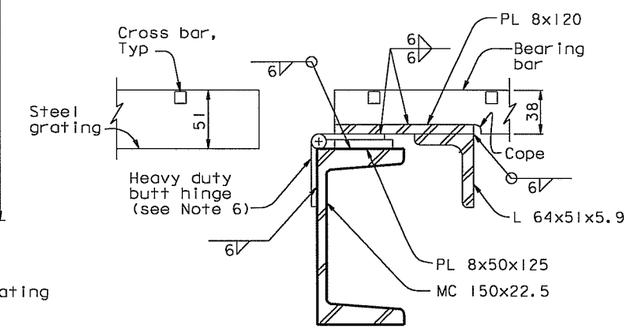

SECTION E-E
1:2.5

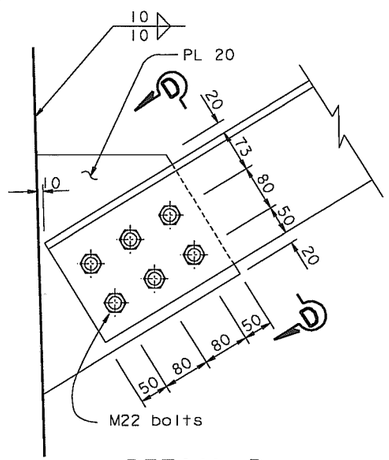

DETAIL D
1:5

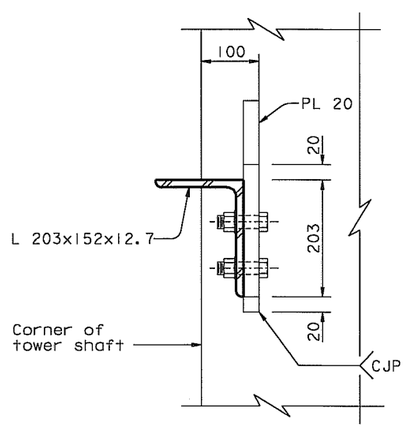

SECTION D-D
1:5

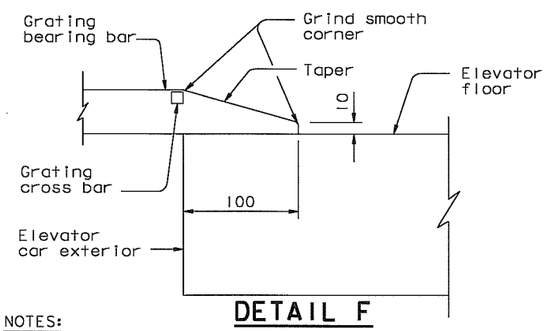

DETAIL F
1:2.5

NOTES:

1. For details A, B, C and G, see "Tower Access Details No. 12" sheet.
2. Elevator clearance envelope matches opening for elevator on "Tower Strut Facade Details No. 2" sheet.
3. Dimensions shall be determined to fit elevator.
4. Dead bolt shall be detailed to meet 51 mm welded eye.
5. For safety gate, see "Road Plans" sheets.
6. Butt hinge shall have a safe working load of 2.5 kN.
7. Chain and shackles should have a safe working load of 7 kN.
8. The hinge shall rest against PL 8 when safety gate is open.

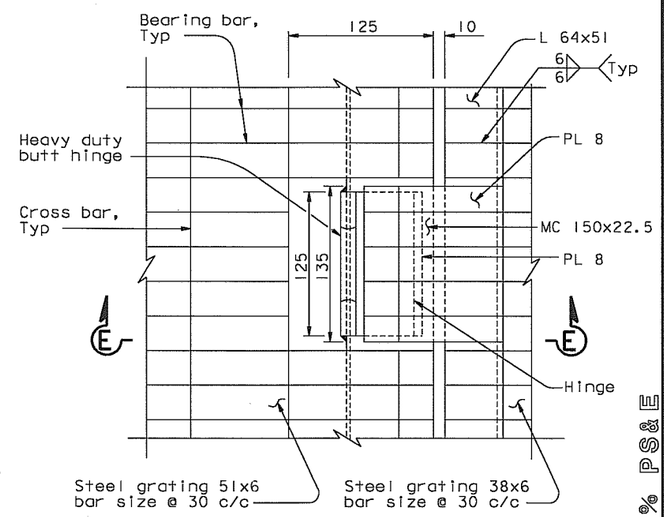

HINGE DETAIL
1:2.5

MARK	DATE	DESCRIPTIONS	BY	CH'D	CCO#
1	09/07/07	MECHANICAL MODIFICATIONS	TH	MN	31

REVISIONS

CONTRACT CHANGE ORDER NO. 31
SHEET 19 OF 20

ALL DIMENSIONS ARE IN MILLIMETERS UNLESS OTHERWISE SHOWN

100 % PS&E

USERNAME => vignatovsk DATE PLOTTED => 10 SEP 2007 TIME PLOTTED => 09:40:04

R. Valizadeh/V. Toan/Y.L./W.L./F.C.
DESIGN OVERSIGHT
SIGN OFF DATE 09/07/07

DESIGN	BY M. Nader	CHECKED N. Vo	
DETAILS	BY G. Baker	CHECKED N. Vo	
QUANTITIES	BY G. Baker	CHECKED N. Vo	

PREPARED FOR THE STATE OF CALIFORNIA DEPARTMENT OF TRANSPORTATION

R. Manzanarez
PROJECT ENGINEER

BRIDGE NO. 34-0006L/R
KILOMETER POST 13.2/13.9

SAN FRANCISCO OAKLAND BAY BRIDGE
EAST SPAN SEISMIC SAFETY PROJECT
SELF-ANCHORED SUSPENSION BRIDGE
(SUPERSTRUCTURE & TOWER)

TOWER ACCESS DETAILS NO. 11

Rev. Date: 5-18-98

ORIGINAL SCALE IN MILLIMETERS FOR REDUCED PLANS 0 10 20 30 40 50 60 70 80 90 100

CU 04
EA 0120F1

DISREGARD PRINTS BEARING EARLIER REVISION DATES

REVISION DATES (PRELIMINARY STAGE ONLY) 04/26/02 01/24/02 12/19/02

SHEET 510R1 OF

FILE => L:\BB\04-01200I\SAS\Contract Plans and CCO\CCO\In Progress\CCO#31\DGN\akacc11b.dgn

DIST.	COUNTY	ROUTE	KILOMETER POST TOTAL PROJECT	SHEET NO.	TOTAL SHEETS
04	SF	80	13.2/13.9	928R1	1204

REGISTERED ENGINEER - CIVIL

12-6-04
PLANS APPROVAL DATE

REGISTERED PROFESSIONAL ENGINEER Marwan N. Nader No. C 54426 Exp. 12/31/07 CIVIL STATE OF CALIFORNIA

The State of California or its officers or agents shall not be responsible for the accuracy or completeness of electronic copies of this plan sheet.

T.Y. LIN / MOFFATT & NICHOL
825 BATTERY STREET
SAN FRANCISCO, CA 94111

Caltrans now has a web site! To get to the web site, go to: http://www.dot.ca.gov

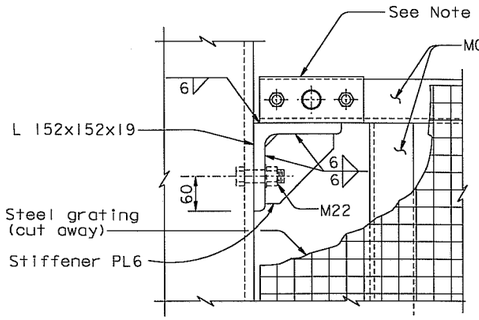

VIEW A-A
1:5

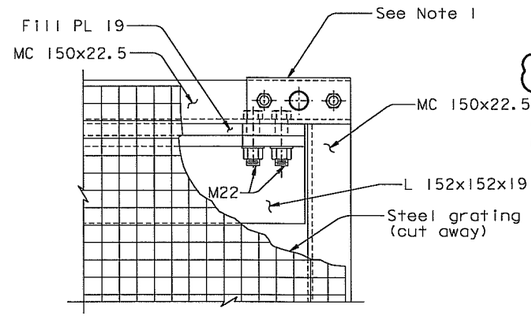

VIEW B-B (Ramp not shown for clarity)
1:5

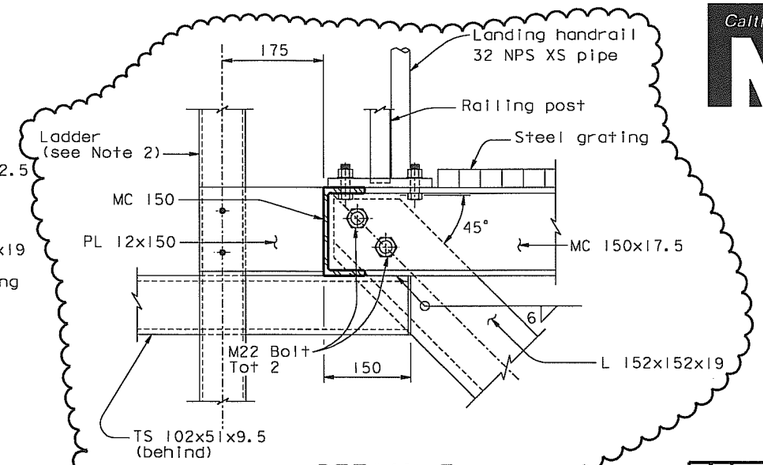

DETAIL F
1:5

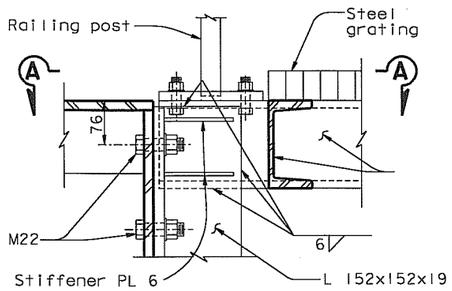

DETAIL A
1:5

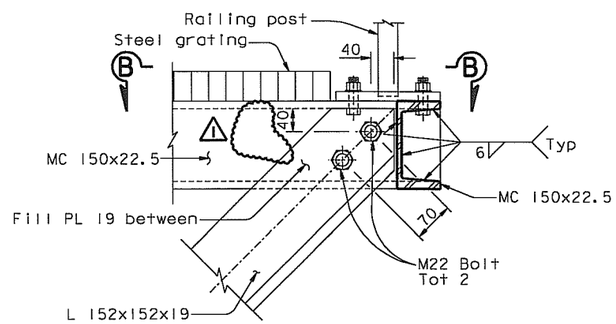

DETAIL B (Ramp not shown for clarity)
1:5

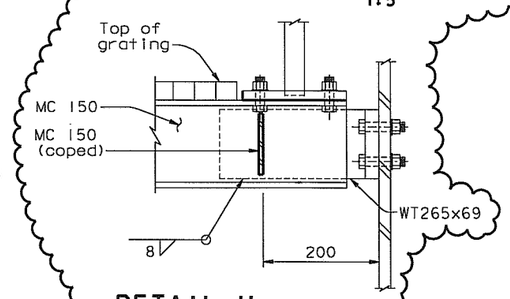

DETAIL H
1:5

MARK	DATE	DESCRIPTIONS	BY	CH'D	CCO#
1	09/07/07	MECHANICAL MODIFICATIONS	JD	MN	31

REVISIONS

CONTRACT CHANGE ORDER NO. 31
SHEET 20 OF 20

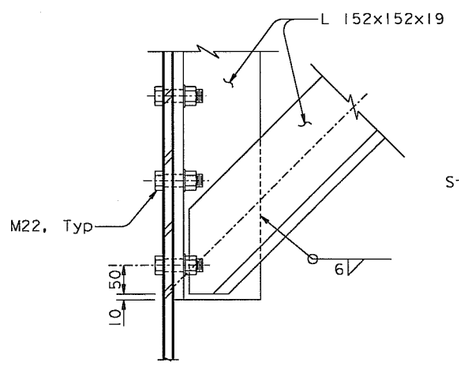

DETAIL C
1:5

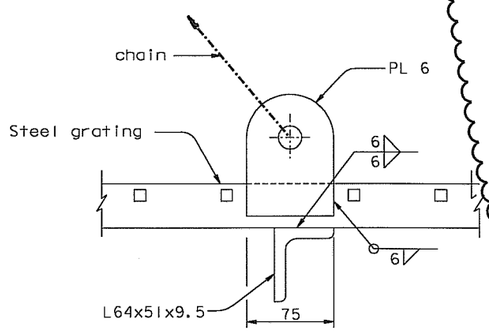

DETAIL G
1:2.5

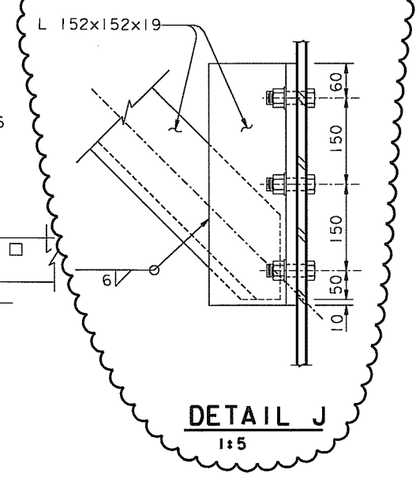

DETAIL J
1:5

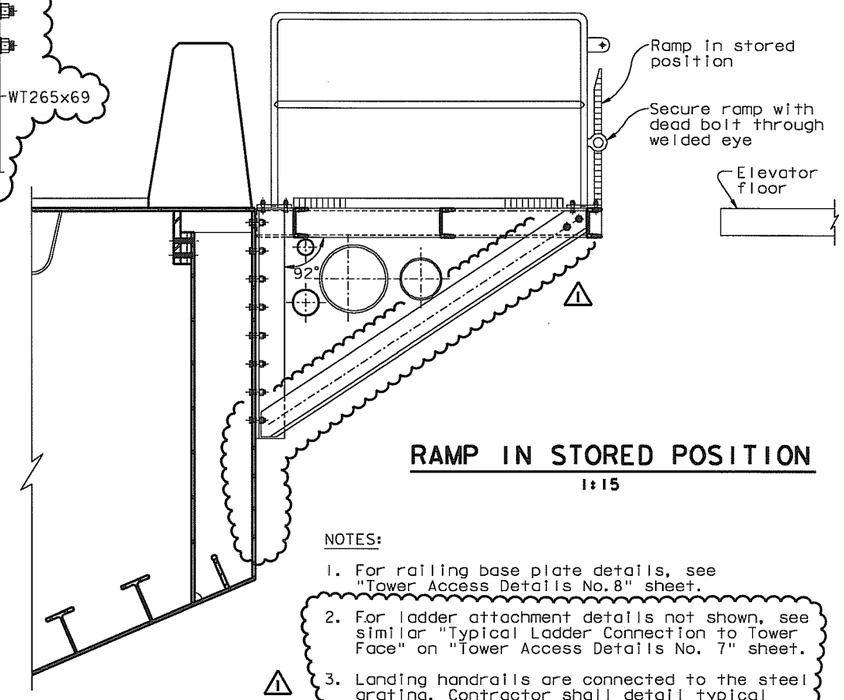

RAMP IN STORED POSITION
1:15

NOTES:

1. For railing base plate details, see "Tower Access Details No.8" sheet.
2. For ladder attachment details not shown, see similar "Typical Ladder Connection to Tower Face" on "Tower Access Details No. 7" sheet.
3. Landing handrails are connected to the steel grating. Contractor shall detail typical connection to fit the supporting structure and may submit alternate designs for Engineer's approval.

ALL DIMENSIONS ARE IN MILLIMETERS UNLESS OTHERWISE SHOWN

SAN FRANCISCO OAKLAND BAY BRIDGE
EAST SPAN SEISMIC SAFETY PROJECT
SELF-ANCHORED SUSPENSION BRIDGE
(SUPERSTRUCTURE & TOWER)

TOWER ACCESS DETAILS NO. 12

R. Valizadeh/V. Toan/Y.L./W.L./F.C.
DESIGN OVERSIGHT
Roya Valizadeh / Vong Toan / Y. Liu
SIGN OFF DATE 09/07/07

	BY	CHECKED
DESIGN	M. Nader	N. Vo
DETAILS	G. Baker	N. Vo
QUANTITIES	G. Baker	N. Vo

PREPARED FOR THE STATE OF CALIFORNIA DEPARTMENT OF TRANSPORTATION

R. Manzanarez
PROJECT ENGINEER

BRIDGE NO. 34-0006L/R
KILOMETER POST 13.2/13.9

CU 04
EA 0120F1

DISREGARD PRINTS BEARING EARLIER REVISION DATES 04/08/02 01/08/02 12/19/02

SHEET 511R1 OF

Rev. Date: 5-18-98

ORIGINAL SCALE IN MILLIMETERS FOR REDUCED PLANS 0 10 20 30 40 50 60 70 80 90 100

FILE => I:\bb\04-01200I\sas\contract plans and cco\cco\in progress\cco#31\dgn\dkacc12b.dgn

USERNAME => vignatovsi DATE PLOTTED => 10 SEP 2007 TIME PLOTTED => 09:38:49

100 % PS&E