DIST.	COUNTY	ROUTE	KILOMETER POST TOTAL PROJECT	SHEET NO.	TOTAL SHEETS
04	SF	80	13.2/13.9	670R1	1204

Caltrans Metric

George Baker
REGISTERED ENGINEER - CIVIL
12-6-04
PLANS APPROVAL DATE

REGISTERED PROFESSIONAL ENGINEER George S. Baker No. C 57112 Exp. 12/31/05 CIVIL STATE OF CALIFORNIA

The State of California or its officers or agents shall not be responsible for the accuracy or completeness of electronic copies of this plan sheet.

T.Y. LIN / MOFFATT & NICHOL
825 BATTERY STREET
SAN FRANCISCO, CA 94111

Caltrans now has a web site! To get to the web site, go to: http://www.dot.ca.gov

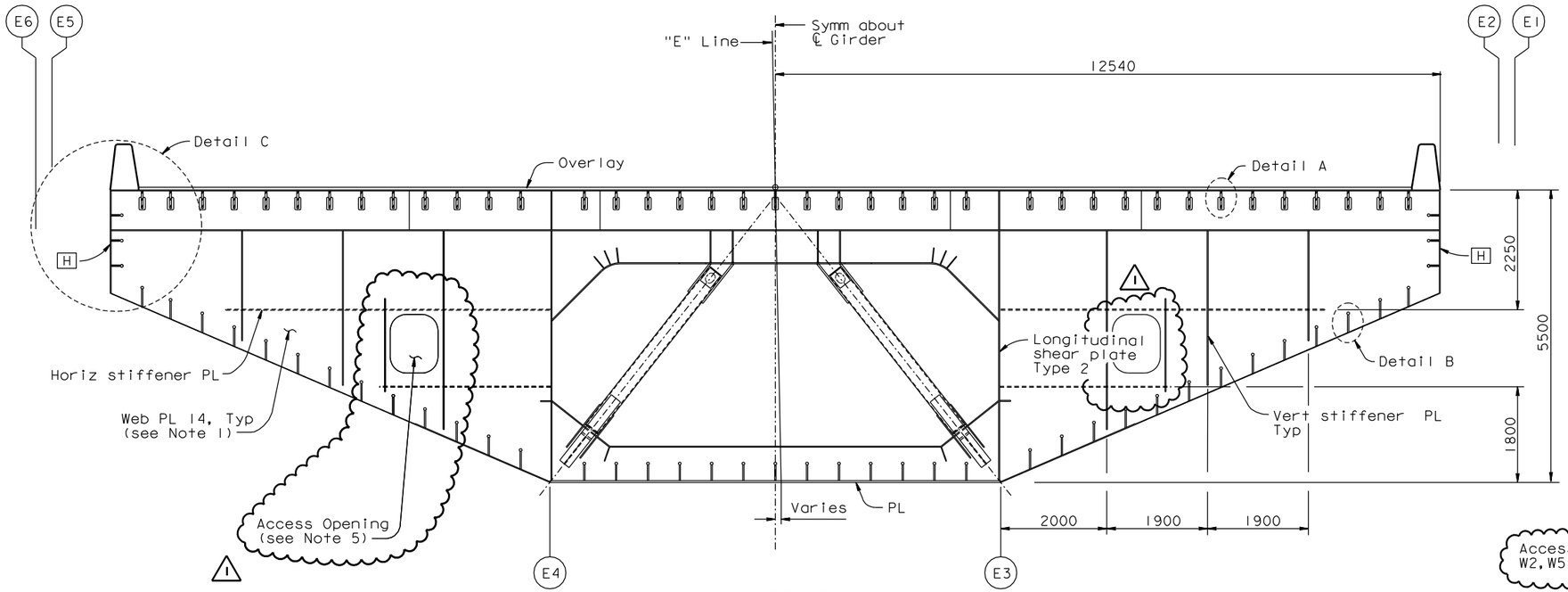

PP8.5

SECTION AT FLOORBEAM

1:50

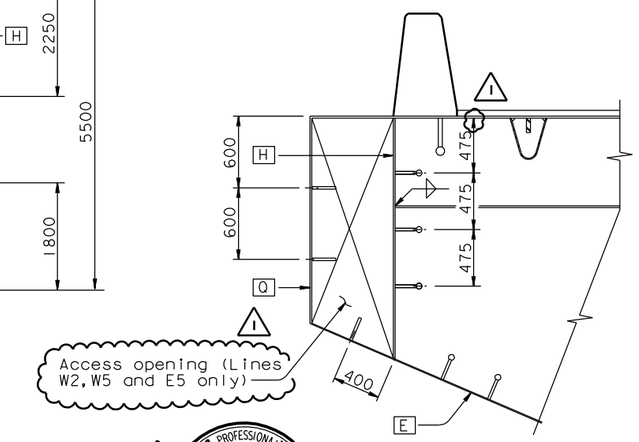

AT PP9

DETAIL C

1:25

Daniel J. Turner
REGISTERED PROFESSIONAL ENGINEER Daniel J. Turner No. C 65033 Exp. 06/30/07 CIVIL STATE OF CALIFORNIA

FOR REVISIONS ONLY

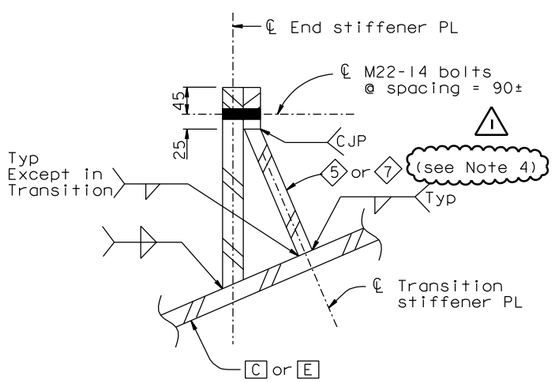

SECTION D-D

END STIFFENER TRANSITION DETAIL

1:5

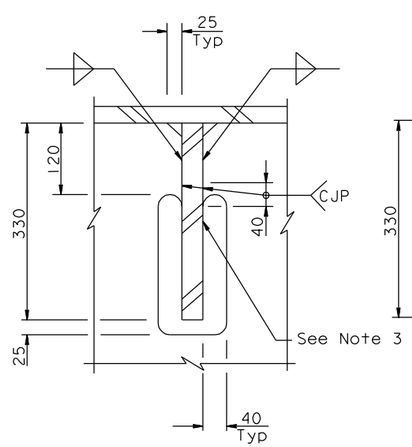

DETAIL A

1:5

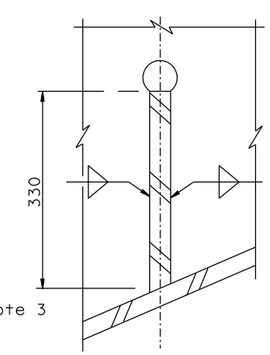

DETAIL B

1:5

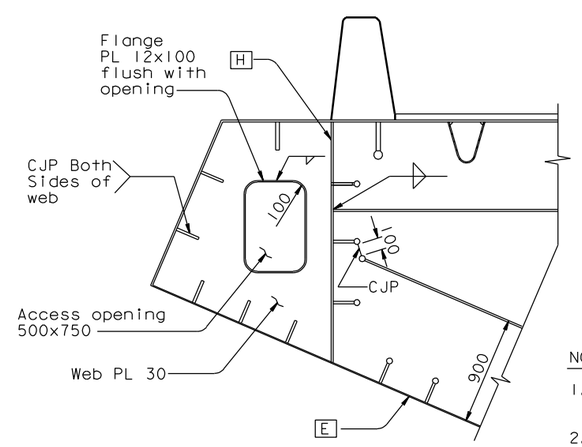

AT PP9.5, PP10

DETAIL C

1:25

MARK	DATE	DESCRIPTIONS	BY	CH'D	CCO#
1	02/16/07	BULKHEAD AT GIRDER PIER W2	AS	DT	27

REVISIONS

CONTRACT CHANGE ORDER NO. _____
SHEET ___ OF ___

NOTES:

1. For web PL sizes at chevron braces , see "Typical Floorbeam Details No.2" sheet.
2. For details not shown, see "Typical Floorbeam Details" sheets.
3. Grind off end of CJP welds. Provide 12 mm trailer with transition to cut-out. See similar detail A on "Typical Girder Details No.4" sheet. Grind opening to 6 micron finish in accordance with ANSI B46.1.
4. Stiffeners 5 and 7 may be terminated without transition taper at 50 mm east of PP8.5.
5. For Access Opening details, see "Typical Floorbeam Details No. 1" sheet.

100 % PS&E

ALL DIMENSIONS ARE IN MILLIMETERS UNLESS OTHERWISE SHOWN

SAN FRANCISCO OAKLAND BAY BRIDGE
EAST SPAN SEISMIC SAFETY PROJECT
SELF-ANCHORED SUSPENSION BRIDGE
(SUPERSTRUCTURE & TOWER)

GIRDER AT PIER W2 NO.6

R. Valizadeh/V. Toan/Y.L./W.L./F.C.
DESIGN OVERSIGHT
SIGN OFF DATE 02/16/07

	BY	CHECKED
DESIGN	G. Baker	P. Ritchie
DETAILS	S. Camo	T. McMeans
QUANTITIES	C. Mauch	M. Roberts

PREPARED FOR THE STATE OF CALIFORNIA DEPARTMENT OF TRANSPORTATION

R. Manzanarez
PROJECT ENGINEER

BRIDGE NO. 34-0006L/R
KILOMETER POST 13.2/13.9

Rev. Date: 5-18-98

ORIGINAL SCALE IN MILLIMETERS FOR REDUCED PLANS 0 10 20 30 40 50 60 70 80 90 100

CU 04
EA 0120F1

DISREGARD PRINTS BEARING EARLIER REVISION DATES

REVISION DATES (PRELIMINARY STAGE ONLY) 01/15/99 05/25/99 08/02/99 05/31/01 04/08/02 01/04/02 12/19/02

SHEET 253R1 OF

FILE => I:\bb\04-012001\sas\contract plans and cco\cco\in progress\cco#27\aggdd05a.dgn

USERNAME => alishansky DATE PLOTTED => 16 MAR 2007 TIME PLOTTED => 07:40:44