DIST.	COUNTY	ROUTE	KILOMETER POST TOTAL PROJECT	SHEET NO.	TOTAL SHEETS
04	SF	80	13.2/13.9	667R1	1204

Caltrans Metric

George Baker
REGISTERED ENGINEER - CIVIL
12-6-04
PLANS APPROVAL DATE

REGISTERED PROFESSIONAL ENGINEER George S. Baker No. C57112 Exp. 12/31/05 CIVIL STATE OF CALIFORNIA

The State of California or its officers or agents shall not be responsible for the accuracy or completeness of electronic copies of this plan sheet.

T.Y. LIN / MOFFATT & NICHOL
825 BATTERY STREET
SAN FRANCISCO, CA 94111

Caltrans now has a web site! To get to the web site, go to: http://www.dot.ca.gov

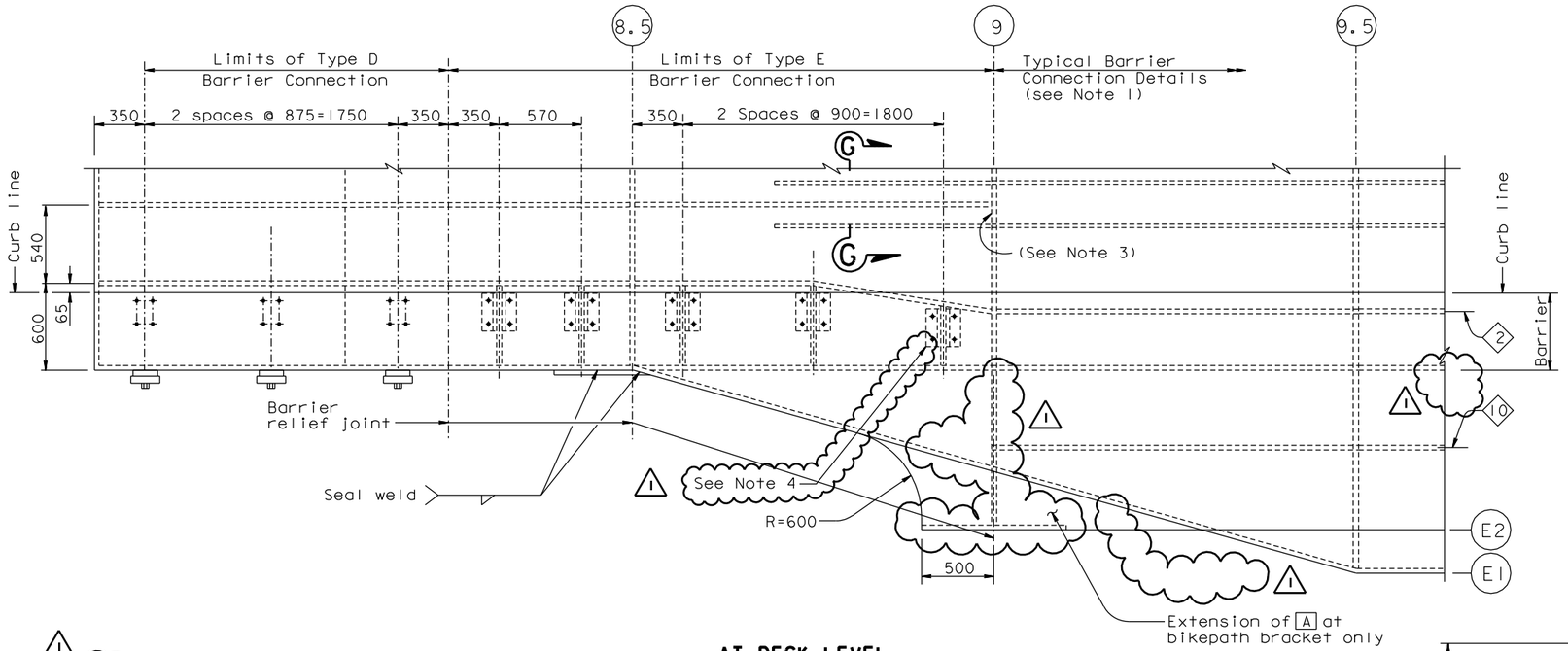

AT DECK LEVEL

DETAIL D (D' Similar at opposite hand)
1:20

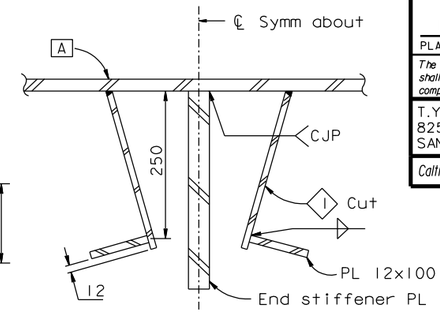

SECTION G-G (See Note 2)
1:5

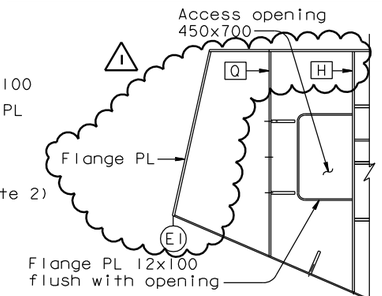

SECTION B-B
1:25

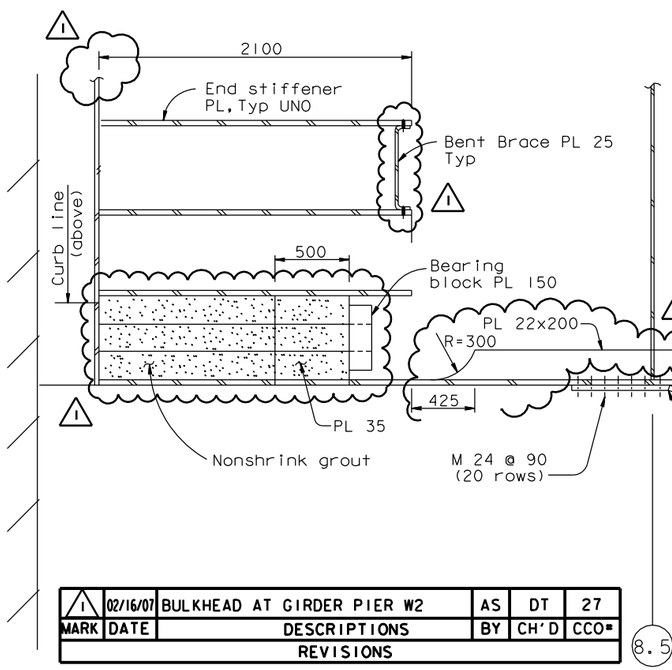

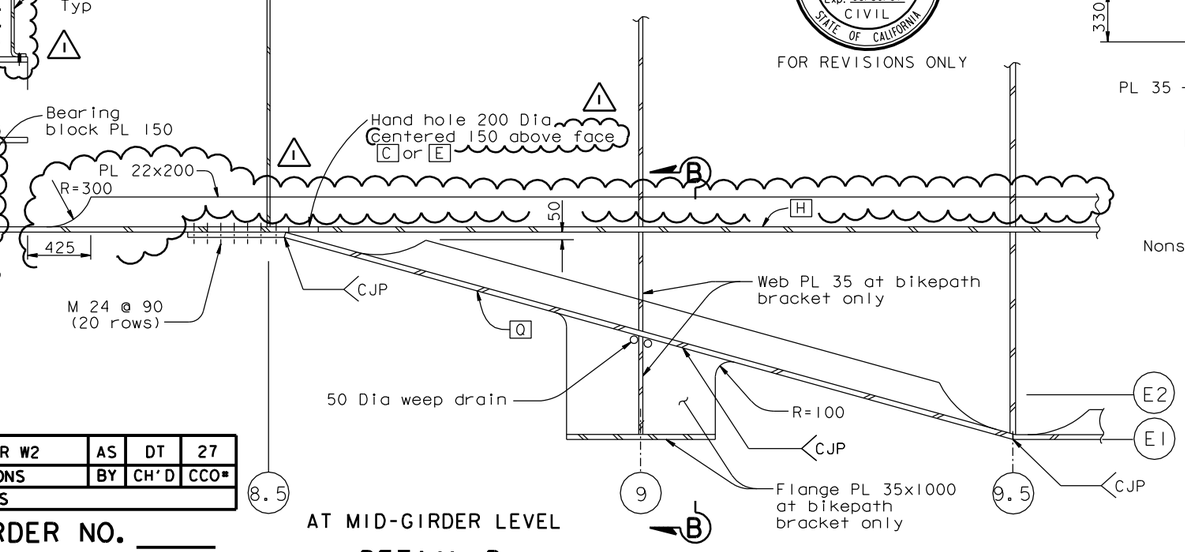

AT MID-GIRDER LEVEL

DETAIL D (D' Similar at opposite hand)
1:20

Daniel J. Turner
REGISTERED PROFESSIONAL ENGINEER Daniel J. Turner No. C 65033 Exp. 06/30/07 CIVIL STATE OF CALIFORNIA
FOR REVISIONS ONLY

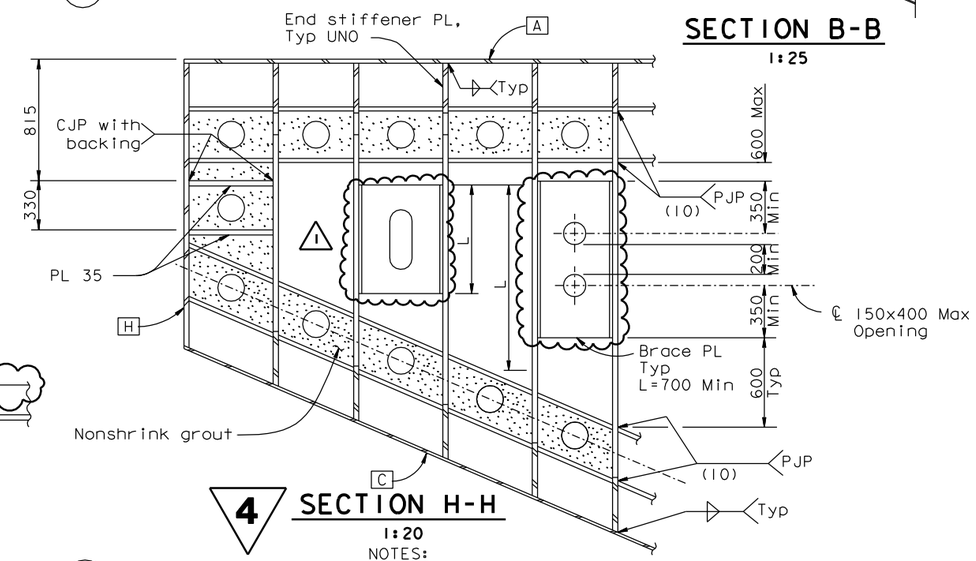

4 SECTION H-H
1:20

NOTES:

1. For typical barrier connection details, see "Typical Girder Details No. 14" sheet. For barrier connection Type D and E, see "Girder At Pier W2 No. 1" sheet.
2. For girder stiff ◇1 transition details not shown, see "Girder At Pier W2 No. 4" sheet.
3. For all girder stiffeners ◇1 (Type 2) the gap in the closure plates shall be caulked at PP9.
4. Base plate connection bolts in the barrier shall be adjusted to fit the anchor bolts in this connection.

MARK	DATE	DESCRIPTIONS	BY	CH'D	CCO#
1	02/16/07	BULKHEAD AT GIRDER PIER W2	AS	DT	27

REVISIONS

CONTRACT CHANGE ORDER NO. ____
SHEET ___ OF ___

4 REVISED PER ADDENDUM NO. 4 DATED DECEMBER 9, 2005

ALL DIMENSIONS ARE IN MILLIMETERS UNLESS OTHERWISE SHOWN

SAN FRANCISCO OAKLAND BAY BRIDGE
EAST SPAN SEISMIC SAFETY PROJECT
SELF-ANCHORED SUSPENSION BRIDGE
(SUPERSTRUCTURE & TOWER)

GIRDER AT PIER W2 NO. 3

R. Valizadeh/V. Toan/Y.L./W.L./F.C.
DESIGN OVERSIGHT
SIGN OFF DATE 02/16/07

	BY	CHECKED
DESIGN	G. Baker	P. Ritchie
DETAILS	C. Mauch	T. McMeans
QUANTITIES	C. Mauch	M. Roberts

PREPARED FOR THE STATE OF CALIFORNIA DEPARTMENT OF TRANSPORTATION

R. Manzanarez
PROJECT ENGINEER

BRIDGE NO. 34-0006L/R
KILOMETER POST 13.2/13.9

Rev. Date: 5-18-98

ORIGINAL SCALE IN MILLIMETERS FOR REDUCED PLANS 0 10 20 30 40 50 60 70 80 90 100

CU 04
EA 0120F1

DISREGARD PRINTS BEARING EARLIER REVISION DATES

REVISION DATES (PRELIMINARY STAGE ONLY): 01/15/99 05/15/99 08/02/99 05/31/01 04/08/02 07/01/02 12/19/02 11/13/05

SHEET 250R1 OF

FILE => I:\bb\04-012001\sas\contract plans and cco\cco\in progress\cco#27\aggdd03.dgn

USERNAME => olishansky DATE PLOTTED => 16 MAR 2007 TIME PLOTTED => 07:34:39

100 % PS&E