| DIST. | COUNTY | ROUTE | KILOMETER POST TOTAL PROJECT | SHEET NO. | TOTAL SHEETS |
|---|---|---|---|---|---|
| 04 | SF | 80 | 13.2/13.9 | 666R1 | 1204 |

Caltrans Metric

George Baker
REGISTERED ENGINEER - CIVIL
12-6-04
PLANS APPROVAL DATE

REGISTERED PROFESSIONAL ENGINEER George S. Baker No. C57112 Exp. 12/31/05 CIVIL STATE OF CALIFORNIA

*The State of California or its officers or agents shall not be responsible for the accuracy or completeness of electronic copies of this plan sheet.*

REGISTERED PROFESSIONAL ENGINEER Daniel J. Turner No. C 65033 Exp. 06/30/07 CIVIL STATE OF CALIFORNIA

FOR REVISIONS ONLY

T.Y. LIN / MOFFATT & NICHOL
825 BATTERY STREET
SAN FRANCISCO, CA 94111

*Caltrans now has a web site! To get to the web site, go to: http://www.dot.ca.gov*

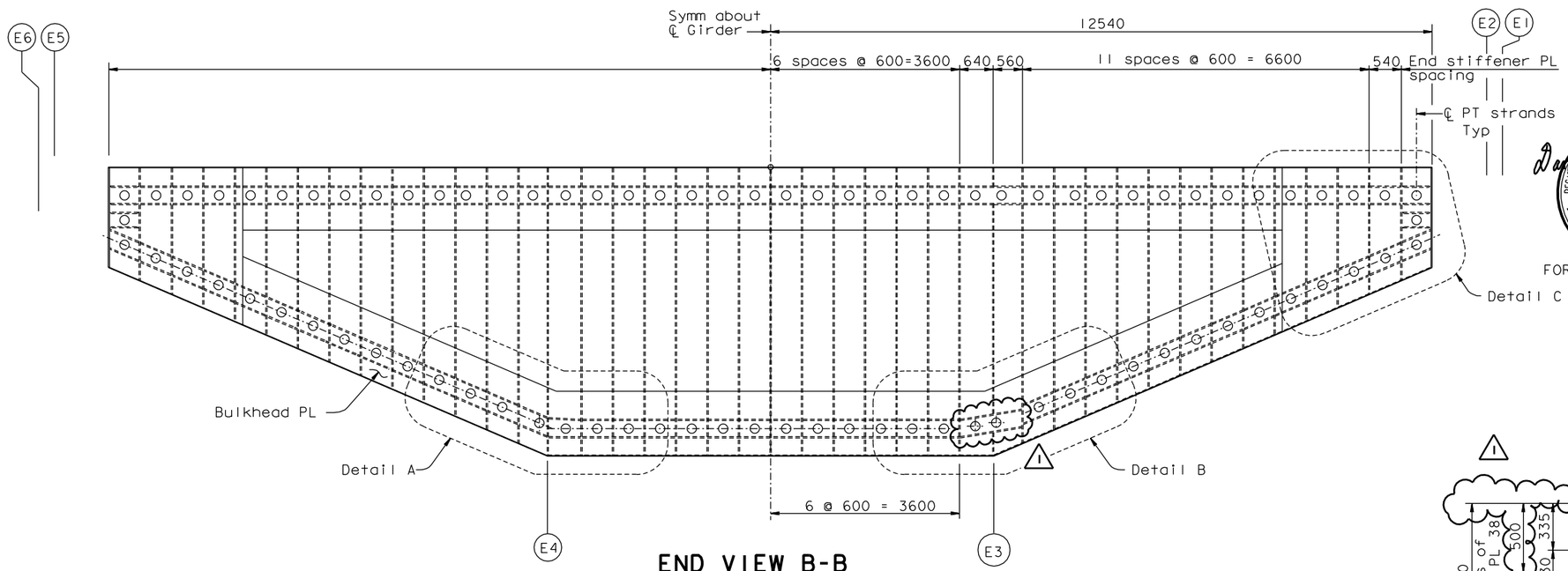


## END VIEW B-B
1:50

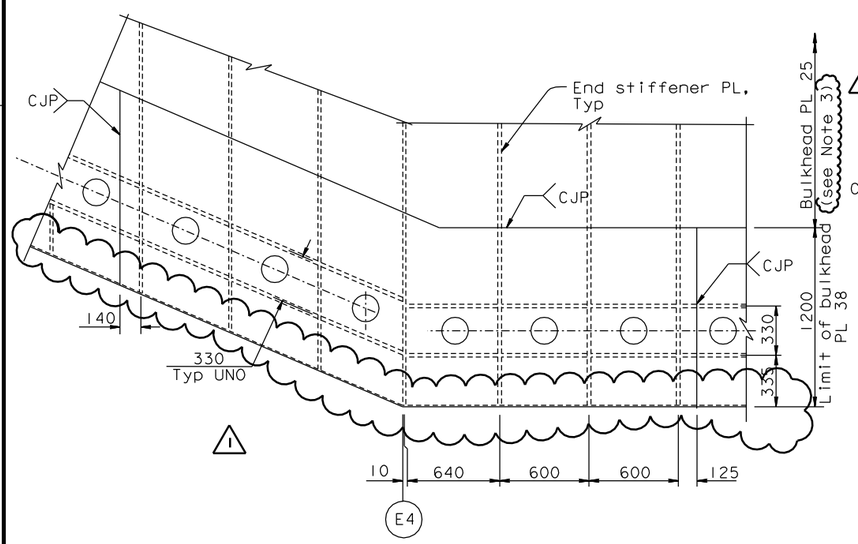


## DETAIL A
1:20

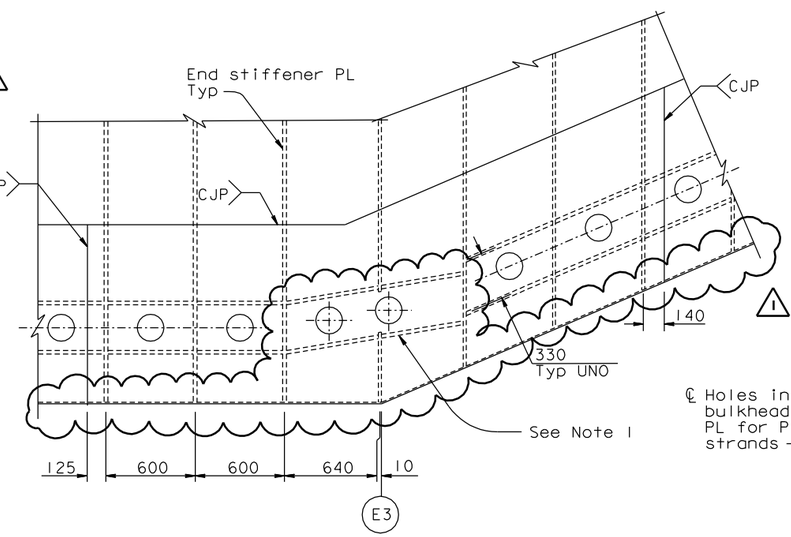


## DETAIL B
1:20

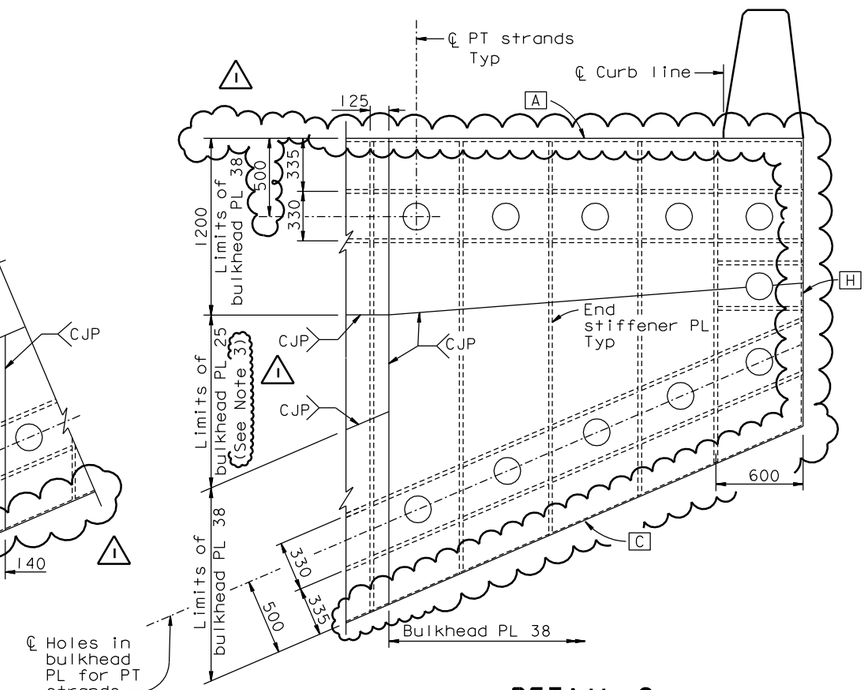


## DETAIL C
1:20

NOTES:

1. Top and bottom strands above the E3 and W3 working points shall be placed in openings. For opening details, see Detail E on "Girder At Pier W2 No. 4" sheet.
2. For locations of PT strands, see "W2 Cap Beam Post-Tensioning Details" sheets.
3. At the Contractor's option, PL 38 may be used subject to review and approval of the Engineer.

| MARK | DATE | DESCRIPTIONS | BY | CH'D | CCO# |
|---|---|---|---|---|---|
| 1 | 02/16/07 | BULKHEAD AT GIRDER PIER W2 | AS | DT | 27 |

REVISIONS

CONTRACT CHANGE ORDER NO. ____
SHEET ___ OF ___

ALL DIMENSIONS ARE IN MILLIMETERS UNLESS OTHERWISE SHOWN

R. Valizadeh/V. Toan/Y.L./W.L./F.C.
DESIGN OVERSIGHT
Ryan Valizadeh / Vong Toan / Y. Liu
STGN OFF DATE 02/16/07
Rev. Date: 5-18-98

| | | | |
|---|---|---|---|
| DESIGN | BY G. Baker | CHECKED P. Ritchie | |
| DETAILS | BY S. Camo | CHECKED T. McMeans | |
| QUANTITIES | BY S. Mauch | CHECKED M. Roberts | |

ORIGINAL SCALE IN MILLIMETERS FOR REDUCED PLANS 0 10 20 30 40 50 60 70 80 90 100

**PREPARED FOR THE STATE OF CALIFORNIA DEPARTMENT OF TRANSPORTATION**

R. Manzanarez
PROJECT ENGINEER

CU 04
EA 0120F1

BRIDGE NO. 34-0006L/R
KILOMETER POST 13.2/13.9

DISREGARD PRINTS BEARING EARLIER REVISION DATES

REVISION DATES (PRELIMINARY STAGE ONLY): 01/15/99 05/13/99 05/31/01 04/08/02 07/01/02 12/19/02

SHEET 249R1 OF

**SAN FRANCISCO OAKLAND BAY BRIDGE EAST SPAN SEISMIC SAFETY PROJECT**
**SELF-ANCHORED SUSPENSION BRIDGE (SUPERSTRUCTURE & TOWER)**
# GIRDER AT PIER W2 NO. 2

FILE => I:\bb\04-012001\sas\contract plans and cco\cco\in progress\cco#27\aggdd02.dgn

100% PS&E

USERNAME => vignatovsky DATE PLOTTED => 19 MAR 2007 TIME PLOTTED => 15:21:28