Caltrans now has a web site! To get to the web site, go to: http://www.dot.ca.gov

Caltrans Metric

DIST.	COUNTY	ROUTE	KILOMETER POST TOTAL PROJECT	SHEET NO.	TOTAL SHEETS
04	SF	80	13.2/13.9	665R1	1204

George Baker
REGISTERED ENGINEER - CIVIL
12-6-04
PLANS APPROVAL DATE

REGISTERED PROFESSIONAL ENGINEER George S. Baker No. C57112 Exp. 12/31/05 CIVIL STATE OF CALIFORNIA

The State of California or its officers or agents shall not be responsible for the accuracy or completeness of electronic copies of this plan sheet.

T.Y. LIN / MOFFATT & NICHOL
825 BATTERY STREET
SAN FRANCISCO, CA 94111

MARK	DATE	DESCRIPTIONS	BY	CH'D	CCO#
1	02/16/07	BULKHEAD AT GIRDER PIER W2	GB	DT	27

REVISIONS

CONTRACT CHANGE ORDER NO. ____
SHEET ___ OF ___

Daniel J. Turner
REGISTERED PROFESSIONAL ENGINEER Daniel J. Turner No. C 65033 Exp. 06/30/07 CIVIL STATE OF CALIFORNIA

FOR REVISIONS ONLY

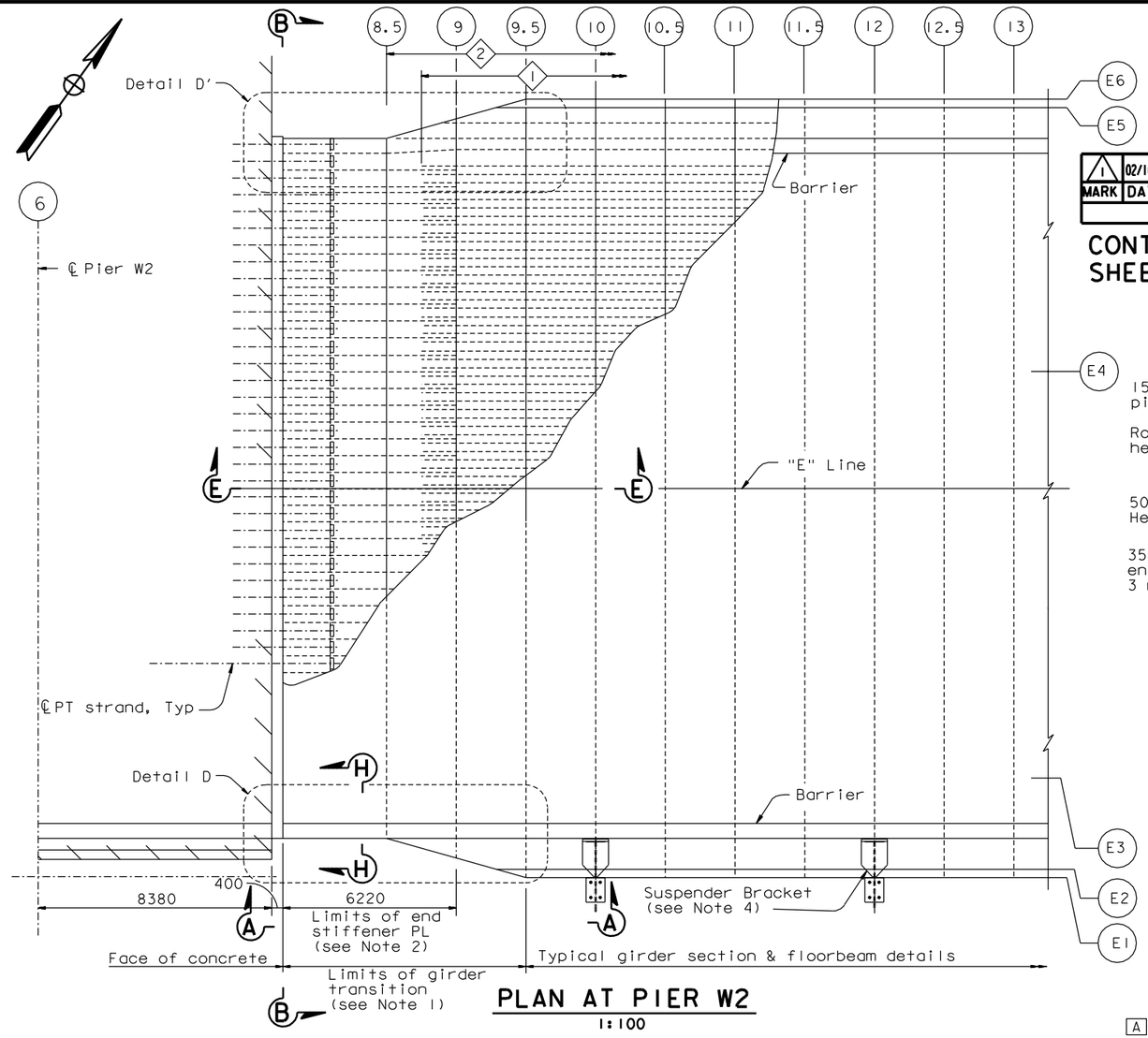

PLAN AT PIER W2
1:100

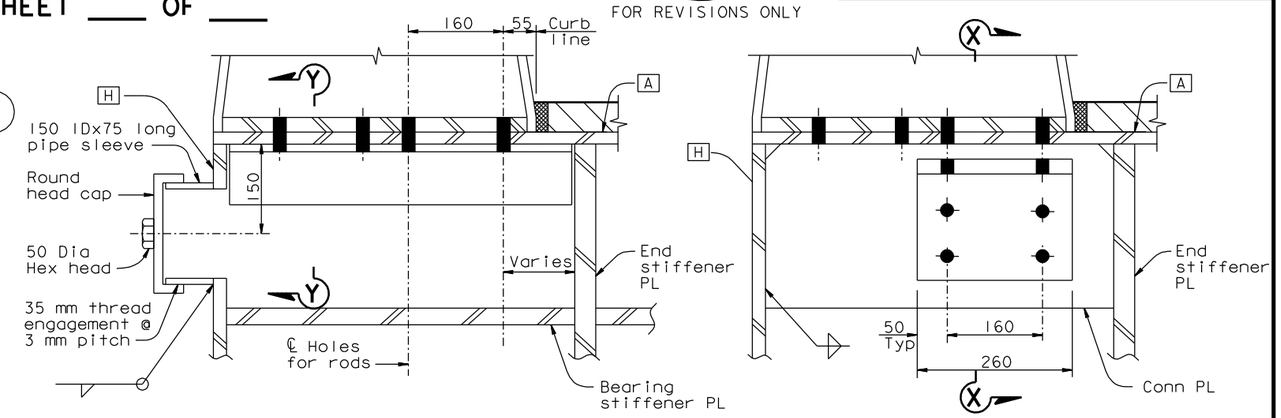

TYPE D

TYPE E

BARRIER CONNECTION DETAILS (See Note 3)
1:5

LEGEND:

- [A] Girder face designation A
- Stiffener Type 2, 3, 9, 10, 11 or other stiffener
- Stiffener Type 1 leg
- Stiffener Type 1 designation

NOTES:

1. For layout of girder transition, see "Girder At Pier W2 No.5" sheet. For floorbeam at PP8.5 and PP9, see "Girder At Pier W2 No.6" sheet.
2. For limits of end stiffener plate and layout of transition to typical girder stiffeners, see "Girder At Pier W2 No.3 and 4" sheets.
3. For location of barrier connection Types D and E, see "Girder At Pier W2 No.3" sheet. For connection details not shown, see "Typical Girder Details No.14" sheet.
4. For suspender bracket, see "Suspender Bracket Details No.1, 2 and 3" sheets.
5. For "Girder At Pier W2" sheets all bolts shall be detailed according to the bolt dimension table, see "Typical Girder Details No.1" sheet. All bolts are HS unless noted otherwise.
6. For "Girder At Pier W2" sheets unless noted otherwise all fillet welds shall be 6 mm for plate sizes not greater that 20 mm. For plates greater than 20 mm fillet welds shall be 8 mm unless noted otherwise.
7. For end-view Section B-B, see "Girder At Pier W2 No.2" sheet.
8. For Section H-H and Details D and D', see "Girder At Pier W2 No.3" sheet.
9. For Section E-E, see "Girder At Pier W2 No.4" sheet.

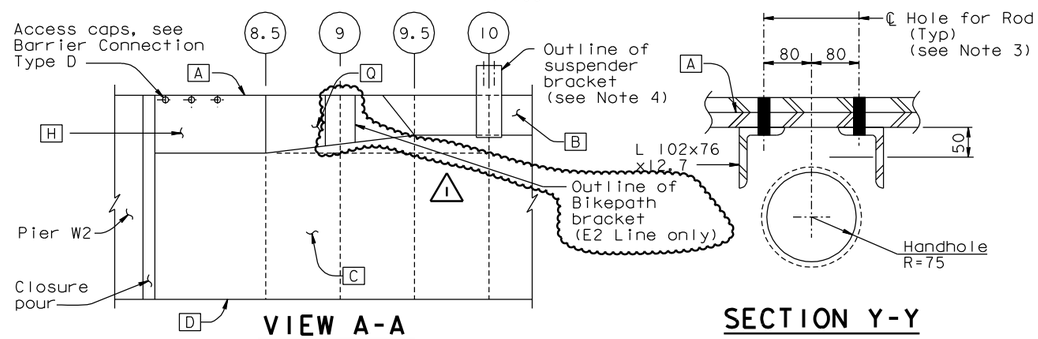

VIEW A-A
1:100

SECTION Y-Y
1:5

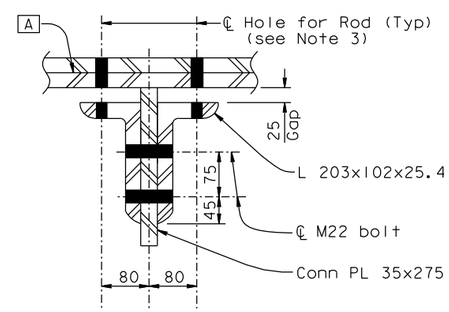

SECTION X-X
1:5

ALL DIMENSIONS ARE IN MILLIMETERS UNLESS OTHERWISE SHOWN

R. Valizadeh/V. Toan/Y.L./W.L./F.C.
DESIGN OVERSIGHT
SIGN OFF DATE 02/16/07

	BY	CHECKED
DESIGN	G. Baker	P. Ritchie
DETAILS	M. Gulyas	T. McMeans
QUANTITIES	C. Mauch	M. Roberts

PREPARED FOR THE STATE OF CALIFORNIA DEPARTMENT OF TRANSPORTATION

R. Manzanarez
PROJECT ENGINEER

BRIDGE NO. 34-0006L/R
KILOMETER POST 13.2/13.9

SAN FRANCISCO OAKLAND BAY BRIDGE
EAST SPAN SEISMIC SAFETY PROJECT
SELF-ANCHORED SUSPENSION BRIDGE
(SUPERSTRUCTURE & TOWER)

GIRDER AT PIER W2 NO. 1

Rev. Date: 5-18-98

ORIGINAL SCALE IN MILLIMETERS FOR REDUCED PLANS 0 10 20 30 40 50 60 70 80 90 100

CU 04
EA 0120F1

DISREGARD PRINTS BEARING EARLIER REVISION DATES

REVISION DATES (PRELIMINARY STAGE ONLY) 08/08/99 05/31/01 04/08/02 07/01/02 12/19/02

SHEET 248R1 OF

FILE => I:\bb\04-012001\sas\contract plans and cco\cco\in progress\cco#27\aggdd01.dgn

100% PS&E

USERNAME => alishansk DATE PLOTTED => 16 MAR 2007 TIME PLOTTED => 07:31:54