Caltrans now has a web site! To get to the web site, go to: http://www.dot.ca.gov

DIST.	COUNTY	ROUTE	KILOMETER POST TOTAL PROJECT	SHEET No.	TOTAL SHEETS
04	SF	80	13.2/13.9	497S25R2	1204

REGISTERED ENGINEER - CIVIL
12-6-04
PLANS APPROVAL DATE
REGISTERED PROFESSIONAL ENGINEER John Sun No. C 54648 Exp. 12/31/05 CIVIL STATE OF CALIFORNIA

The State of California or its officers or agents shall not be responsible for the accuracy or completeness of electronic copies of this plan sheet.

T.Y. LIN / MOFFATT & NICHOL
825 BATTERY STREET
SAN FRANCISCO, CA 94111

Caltrans Metric

REGISTERED PROFESSIONAL ENGINEER James P. Duxbury No. C 64677 Exp. 06/30/07 CIVIL STATE OF CALIFORNIA

FOR REVISIONS ONLY

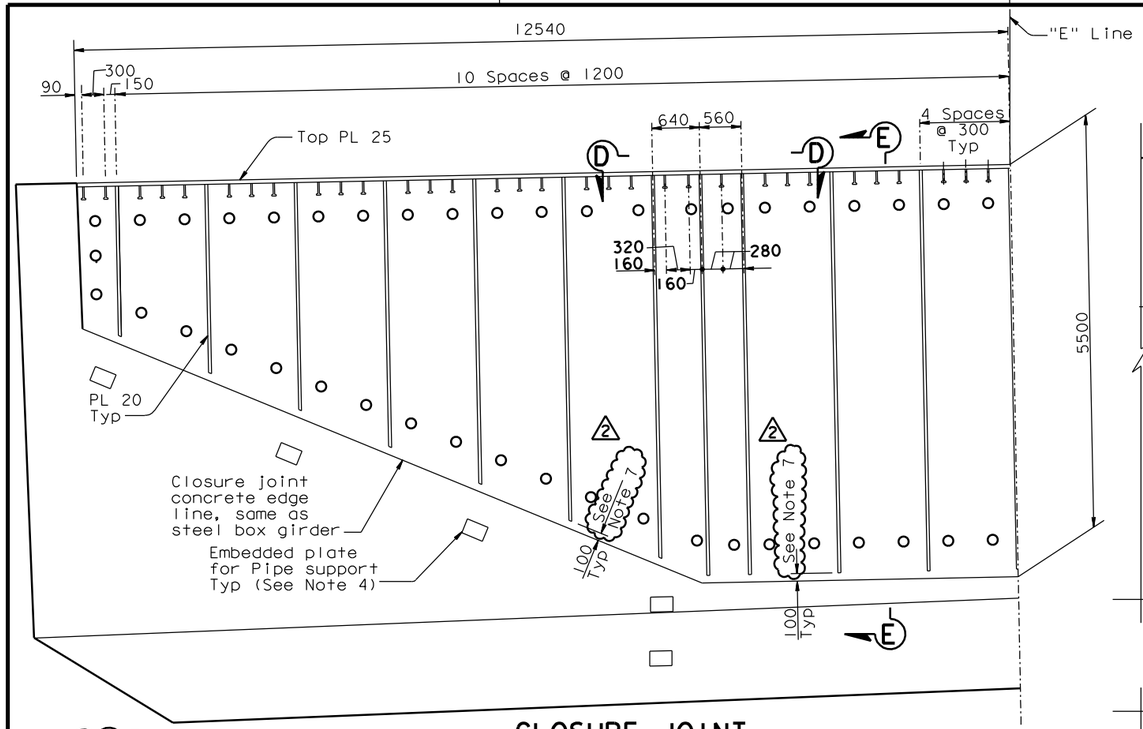

CLOSURE JOINT

(Closure joint reinforcement not shown for clarity)

1:40

NOTES:

6. For extents of post-tensioning into the Girder at Pier W2, see Top and Bottom Tendon layout on "W2 Cap Beam Post-tensioning Details No.5 thru No.8" sheets.
7. For Westbound continuity tendons 28B, 29A and 29B and for Eastbound continuity tendons 29A and 29B, the Contractor may terminate the PL20 vertical stiffener 125 mm above the bottom tendons and below the top tendons.
8. At the Contractor's option, hairpin dimension may be reduced to 1200 min.
9. At the Contractor's option, ultimate splice couplers may be used on #19 hairpins.
10. Bundled hairpins shall be placed along the entire box girder interface perimeter.

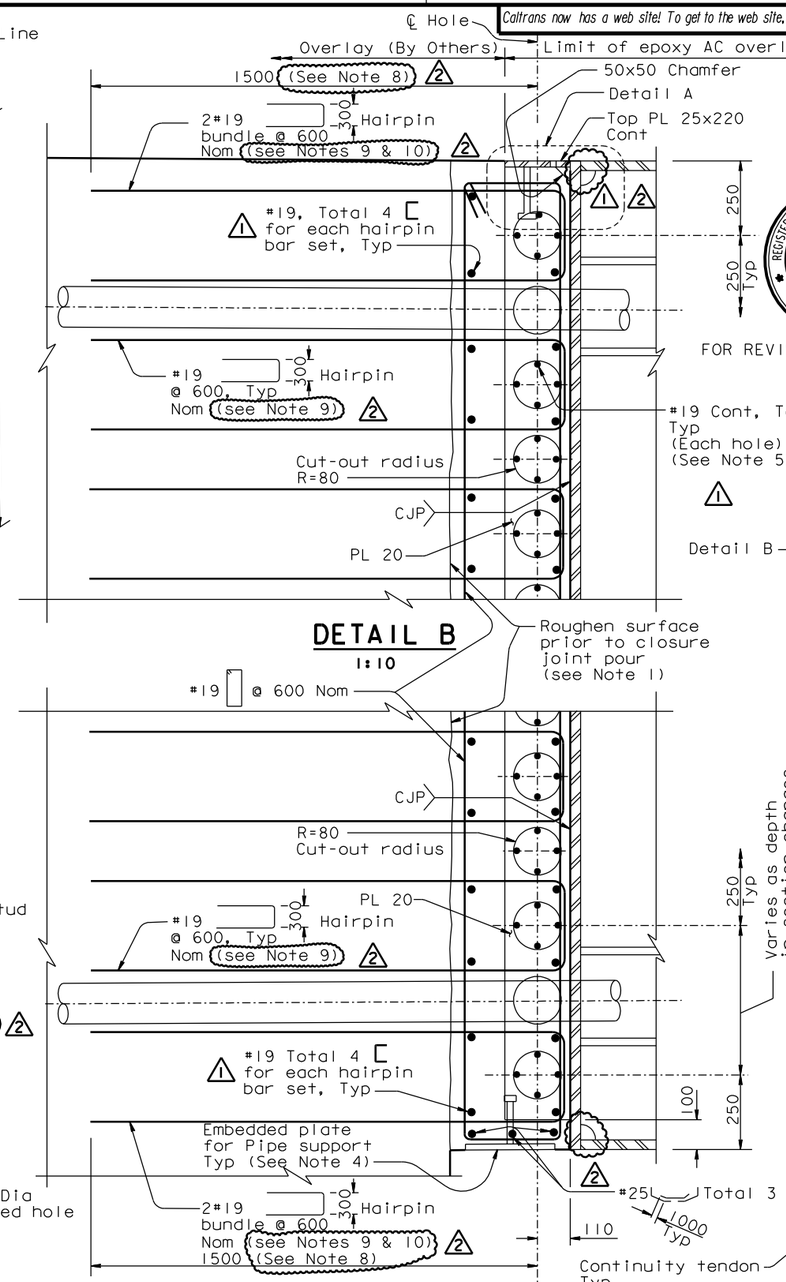

DETAIL B

1:10

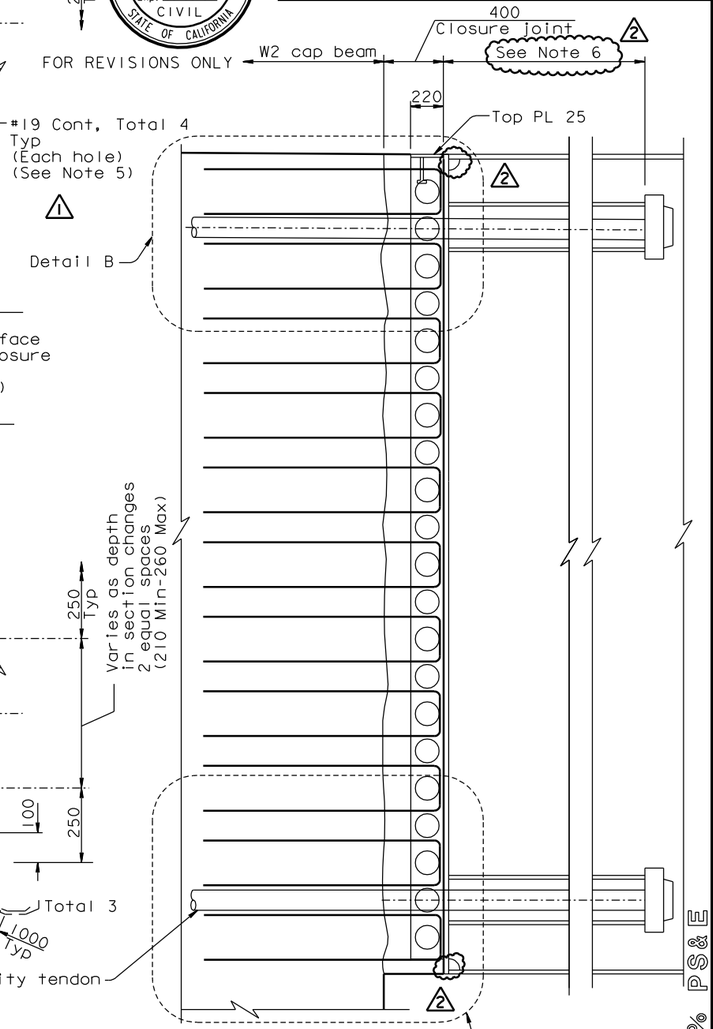

SECTION E-E

1:20

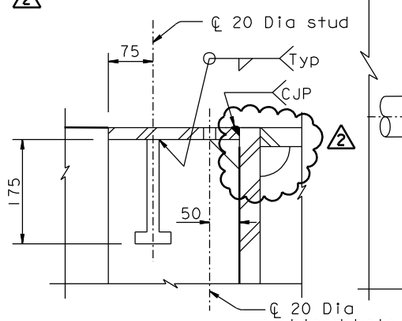

DETAIL A

1:5

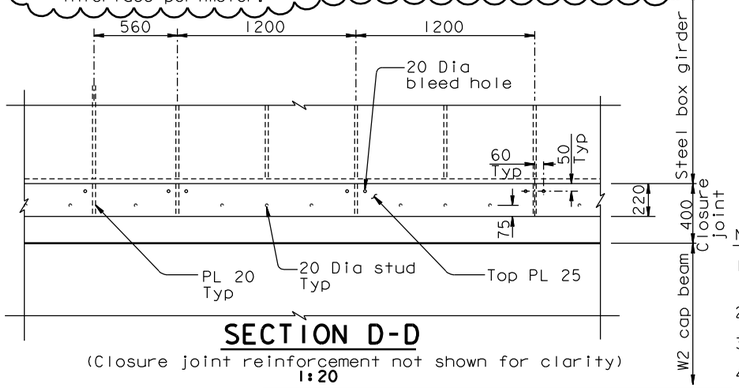

SECTION D-D

(Closure joint reinforcement not shown for clarity)

1:20

NOTES:

1. Roughen the existing W2 Cap Beam concrete surface to a minimum of 5 mm amplitude prior to pouring the closure joint.
2. Reinforcement spacing shall be adjusted to avoid PT ducts if required.
3. All plate shall be ASTM A709M HPS 485W, unless specified otherwise.
4. For pipe support locations and details, see "Road Plans".
5. At the Contractor's option, 2-#29 bundled bars may be used. 1

ALL DIMENSIONS ARE IN MILLIMETERS UNLESS OTHERWISE SHOWN

MARK	DATE	DESCRIPTIONS	BY	CH'D	CCO#
2	02/16/07	BULKHEAD AT GIRDER PIER W2	JD	AS	27
1	01/31/07	WEST DEVIATION SADDLE GEOMETRY	JD	AS	15
0	07/21/06	GENERAL REVISIONS	JD	AS	23

REVISIONS

CONTRACT CHANGE ORDER NO. ____
SHEET ___ OF ___

R. Valizadeh/V.Toan/Y.L./W.L./F.C.
DESIGN OVERSIGHT
Ryan Valizadeh / Vong Toan / Y. Liu
SIGN OFF DATE 02/16/07
Rev. Date: 5-18-98

DESIGN	BY J. Sun	CHECKED M. Chen	
DETAILS	BY J. Duxbury	CHECKED M. Chen	
QUANTITIES	BY S. Shi	CHECKED D. Harrison	

PREPARED FOR THE STATE OF CALIFORNIA DEPARTMENT OF TRANSPORTATION

R. Manzanarez
PROJECT ENGINEER

CU 04
EA 0120F1

BRIDGE NO. 34-0006L/R
KILOMETER POST 13.2/13.9

DISREGARD PRINTS BEARING EARLIER REVISION DATES 07/21/06

ORIGINAL SCALE IN MILLIMETERS FOR REDUCED PLANS 0 10 20 30 40 50 60 70 80 90 100

SAN FRANCISCO OAKLAND BAY BRIDGE
EAST SPAN SEISMIC SAFETY PROJECT
SELF-ANCHORED SUSPENSION BRIDGE
(SUPERSTRUCTURE & TOWER)

W2 CAP BEAM REINFORCEMENT DETAILS NO. 49

REVISION DATES (PRELIMINARY STAGE ONLY)

SHEET 080S25R2 OF

FILE => I:\bb\04-012001\sas\contract plans and cco\cco\in progress\cco#27\sup cco#27\oecap48r-s.dgn

USERNAME => ptom DATE PLOTTED => 10 MAY 2007 TIME PLOTTED => 14:59:37

100 % PS&E