CONTRACT CHANGE ORDER

Change Requested by: Engineer

CCO: 27 Suppl. No. 0 Contract No. 04 – 0120F4 Road SF-80-13.2/13.9 **FED. AID LOC.:**

To: **AMERICAN BRIDGE/FLUOR ENTERPRISES INC A JOINT VENTURE**

You are directed to make the following changes from the plans and specifications or do the following described work not included in the plans and specifications for this contract. ***NOTE: This change order is not effective until approved by the Engineer.***

Description of work to be done, estimate of quantities and prices to be paid. (Segregate between additional work at contract price, agreed price and force account.) Unless otherwise stated, rates for rental of equipment cover only such time as equipment is actually used and no allowance will be made for idle time. This last percentage shown is the net accumulated increase or decrease from the original quantity in the Engineer's Estimate.

This change order modifies the bearing blocks and provides a larger and re-located access opening for placing bearing blocks, tendon anchors, and pre-stressing jacks (used during the installation of the continuity tendons from W2 to the OBG) as shown on sheets three (3) through eighteen (18) of this change order.

The following revised contract plan sheets and supplemental sheet detail all changes:

466R3, 467R2, 468R3, 469R2, 472R2, 497S25R2, 619R1, 646R1, 665R1, 666R1, 667R1, 668R1, 668S1, 668S2, 669R1 and 670R1 (of 1204).

This change order resolves the costs associated with Contractor Request For Information (RFI) Nos. 255, 207, 222, 241, 277, 277R1, 308, 309, 311, 313R1, 329, 336R1, 337, 340, 346, 381, 424, 497, 522, 537R1, 599, 607, 608, 609, 614 and RFCO No. 6 with respect to changes listed above.

Decrease in Contract Item at Contract Unit Price:

ITEM 1.

Item No. 55: FURNISH STRUCTURAL STEEL (BRIDGE) (BOX GIRDER)

-959 KG	(-0.00%)	@	$9.00 /KG	=	-$8,631.00	(+0.63%)

Item No. 56: ERECT STRUCTURAL STEEL (BRIDGE) (BOX GIRDER)

-959 KG	(-0.00%)	@	$1.00 /KG	=	-$959.00	(+0.63%)

The quantity decrease shown herein for Item #55, FURNISH STRUCTURAL STEEL (BRIDGE) (BOX GIRDER), and Item #56, ERECT STRUCTURAL STEEL (BRIDGE) (BOX GIRDER), when combined with the quantity shown in the Engineer's Estimate, and as modified by any previous change orders or revisions to dimensions made by the Engineer, shall be the final quantity for which payment will be made.

Total Decrease in Contract Items at Contract Unit Prices..... <$9,590.00>

Adjustment of Compensation at Lump Sum Price:

ITEM 2.

Perform and provide as appropriate all required additional detailing, cutting of openings, installation of trumpets, conflict resolution of RFI's listed above in this change order, mill stiffener plates, and fabricate rings. The revised contract plan sheets and supplemental sheet listed above and provided in this change order detail all changes.

For this work, the Contractor will be paid the sum of $78,141.00. This sum constitutes full compensation, including all markups, for this change.

Adjustment of Compensation at Lump Sum Price..... $78,141.00

Adjustment of Compensation at Lump Sum Price:

ITEM 3.

The items identified above in this change order have been paid as part of CCO 108 resolution. Therefore, the amount due under this change order will be adjusted by the amount paid under CCO 108 to prevent a double payment. Total amount paid under CCO 108, and to be credited to this change, is $68,551.00.

Adjustment of Compensation at Lump Sum Price..... <$68,551.00>

CHANGE ORDER COST AND TIME SUMMARY

(ITEM 1) Decrease in Contract Items at Contract Unit Price	<$9,590.00>
(ITEM 2) Adjustment of Compensation for work pursuant to this change order	$78,141.00
Sub-total (ITEM 1 & 2), net value of this change order	$68,551.00
(ITEM 3) Amount paid under CCO 108 for this change order	<$68,551.00>
Total net pay for this change order.....	$0.00

Contract time is addressed in CCO 108 for all work identified in this change order. Therefore contract time will not be adjusted in this change order.

Estimated Cost: **Increase** ☐ **Decrease** ☐ **$0.00**

By reason of this order the time of completion will be adjusted as follows: 0 days

Submitted by

Signature D Balan **Resident Engineer** for Brian Boal for Gary Pursell, Sup.T.E. **Date** 2-22-10

Approval Recommended by

Signature Gary Pursell **Supervising Transportation Engineer** Gary Pursell, Sup.T.E. **Date** 2/22/10

Engineer Approval by

Signature Gary Pursell **Supervising Transportation Engineer** Gary Pursell, Sup.T.E. **Date** 2/24/10

We the undersigned contractor, have given careful consideration to the change proposed and agree, if this proposal is approved, that we will provide all equipment, furnish the materials, except as otherwise be noted above, and perform all services necessary for the work above specified, and will accept as full payment therefor the prices shown above.

NOTE: If you, the contractor, do not sign acceptance of this order, your attention is directed to the requirements of the specifications as to proceeding with the ordered work and filing a written protest within the time therein specified.

Contractor Acceptance by

Signature Mike Flowers **(Print name and title)** Michael D. Flowers Project Director **Date** 2-23-10

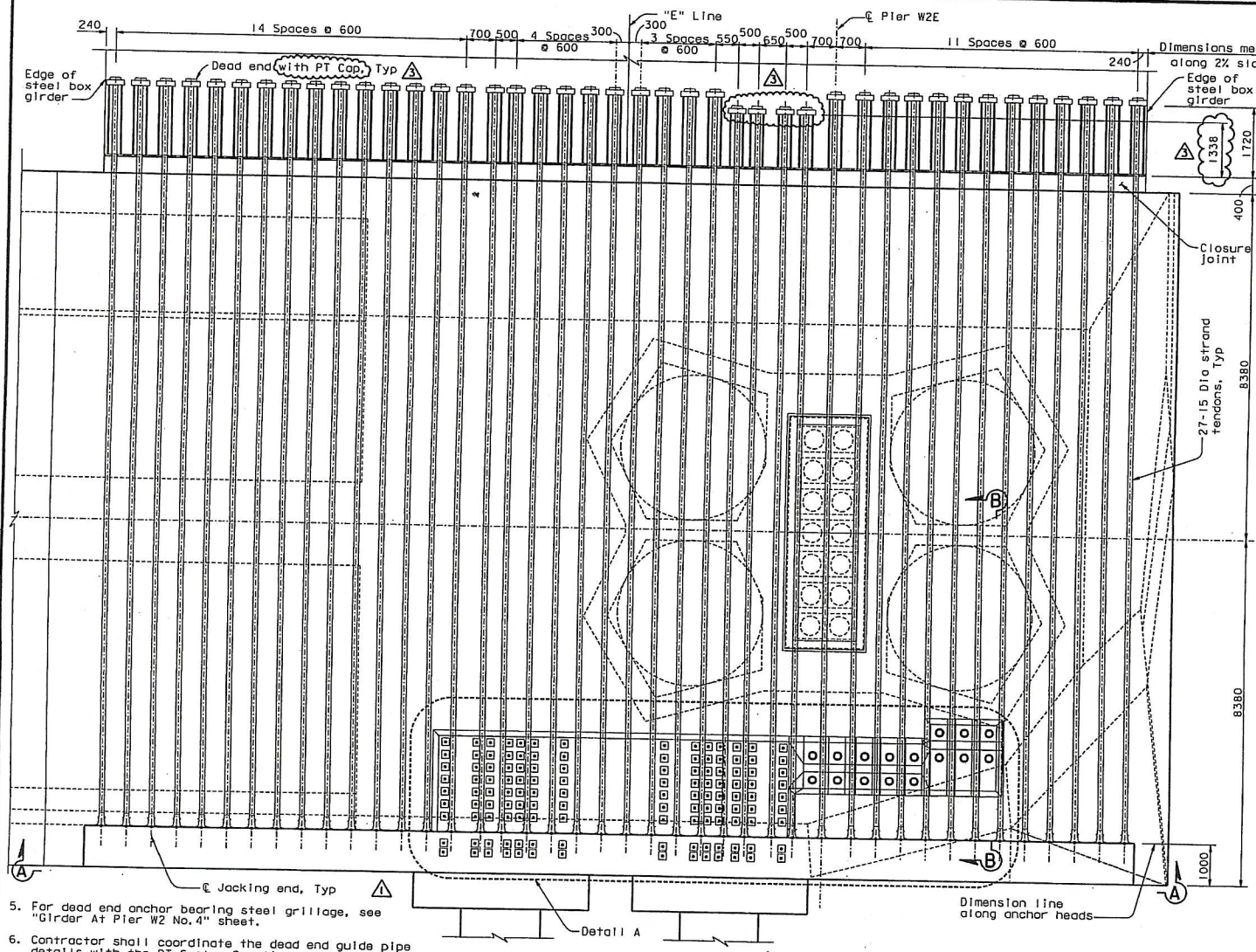

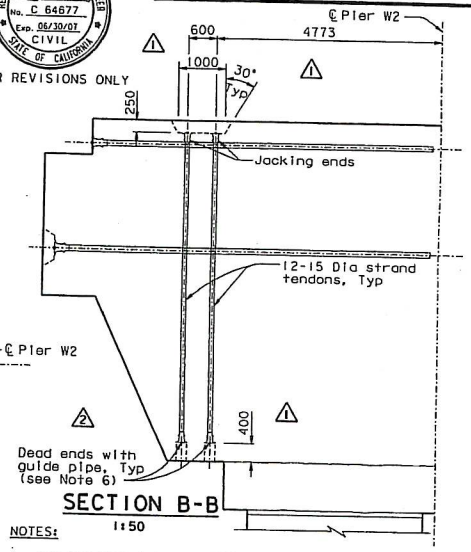

SECTION B-B
1:50

NOTES:

1. For Section A-A, see "W2 Cap Beam Post-Tensioning Details No. 9" sheet.
2. For Detail A, see "W2 Cap Beam Post-Tensioning Details No. 10" sheet.
3. All W2 cap beam continuity tendons are ASTM A416 Grade 270 (fu=1860 MPa), low relaxation, 27-15 Dia seven wire strand PT, unless specified otherwise. For additional prestressing details, see "Prestressing Notes" sheet.
4. For blockout details, see "W2 Cap Beam Blockout Details" sheets.
5. For dead end anchor bearing steel grillage, see "Girder At Pier W2 No. 4" sheet.
6. Contractor shall coordinate the dead end guide pipe details with the PT System Supplier and shall submit them to the Engineer for review and approval. Contractor shall grout the guide pipe after stressing operations have been completed.

TOP TENDON LAYOUT PLAN ("E" Line)
1:50

MARK	DATE	DESCRIPTIONS	BY	CH'D	CCO#
3	02/16/07	BULKHEAD AT GIRDER PIER W2	JD	AS	27
2	01/31/07	CORROSION PROTECTION	JD	AS	16
1	07/21/06	W2 CAP BEAM ISD	JD	NV	23

REVISIONS

CONTRACT CHANGE ORDER NO. 27
SHEET 3 OF 18

DIST.	COUNTY	ROUTE	KILOMETER POST TOTAL PROJECT	SHEET NO.	TOTAL SHEETS
04	SF	80	13.2/13.9	466R3	1204

REGISTERED ENGINEER - CIVIL
12-6-04
PLANS APPROVAL DATE
The State of California or its officers or agents shall not be responsible for the accuracy or completeness of electronic copies of this plan sheet.

REGISTERED PROFESSIONAL ENGINEER John Sun No. C 54648 Exp. 12/31/05 CIVIL STATE OF CALIFORNIA

T.Y. LIN / MOFFATT & NICHOL
825 BATTERY STREET
SAN FRANCISCO, CA 94111

Caltrans now has a web site! To get to the web site, go to: http://www.dot.ca.gov

Caltrans Metric

REGISTERED PROFESSIONAL ENGINEER No. C 64677 Exp. 06/30/07 CIVIL STATE OF CALIFORNIA

FOR REVISIONS ONLY

ALL DIMENSIONS ARE IN MILLIMETERS UNLESS OTHERWISE SHOWN

R. Valizadeh/V. Toan/Y.L./W.L./F.C.
DESIGN OVERSIGHT
SIGN OFF DATE 02/16/07
Rev. Date: 5-18-98

DESIGN	BY J. Sun	CHECKED	M. Chen
DETAILS	BY J. Duxbury	CHECKED	M. Chen
QUANTITIES	BY S. Shi	CHECKED	D. Harrison

ORIGINAL SCALE IN MILLIMETERS FOR REDUCED PLANS

PREPARED FOR THE STATE OF CALIFORNIA DEPARTMENT OF TRANSPORTATION

R. Manzanarez
PROJECT ENGINEER

BRIDGE NO. 34-0006L/R
KILOMETER POST 13.2/13.9

CU 04
EA 0120F1

SAN FRANCISCO OAKLAND BAY BRIDGE
EAST SPAN SEISMIC SAFETY PROJECT
SELF-ANCHORED SUSPENSION BRIDGE
(SUPERSTRUCTURE & TOWER)

W2 CAP BEAM POST-TENSION DETAILS NO. 5

DISREGARD PRINTS BEARING EARLIER REVISION DATES
REVISION DATES (PRELIMINARY STAGE)
SHEET 049R3 OF

FILE => I:\bb\04-012001\sas\contract plans and cco\cco\in progress\cco-27\oecpt05.dgn

100 % PS&E

USERNAME => visitor DATE PLOTTED => 15 MAR 2007 TIME PLOTTED => 15:51:56

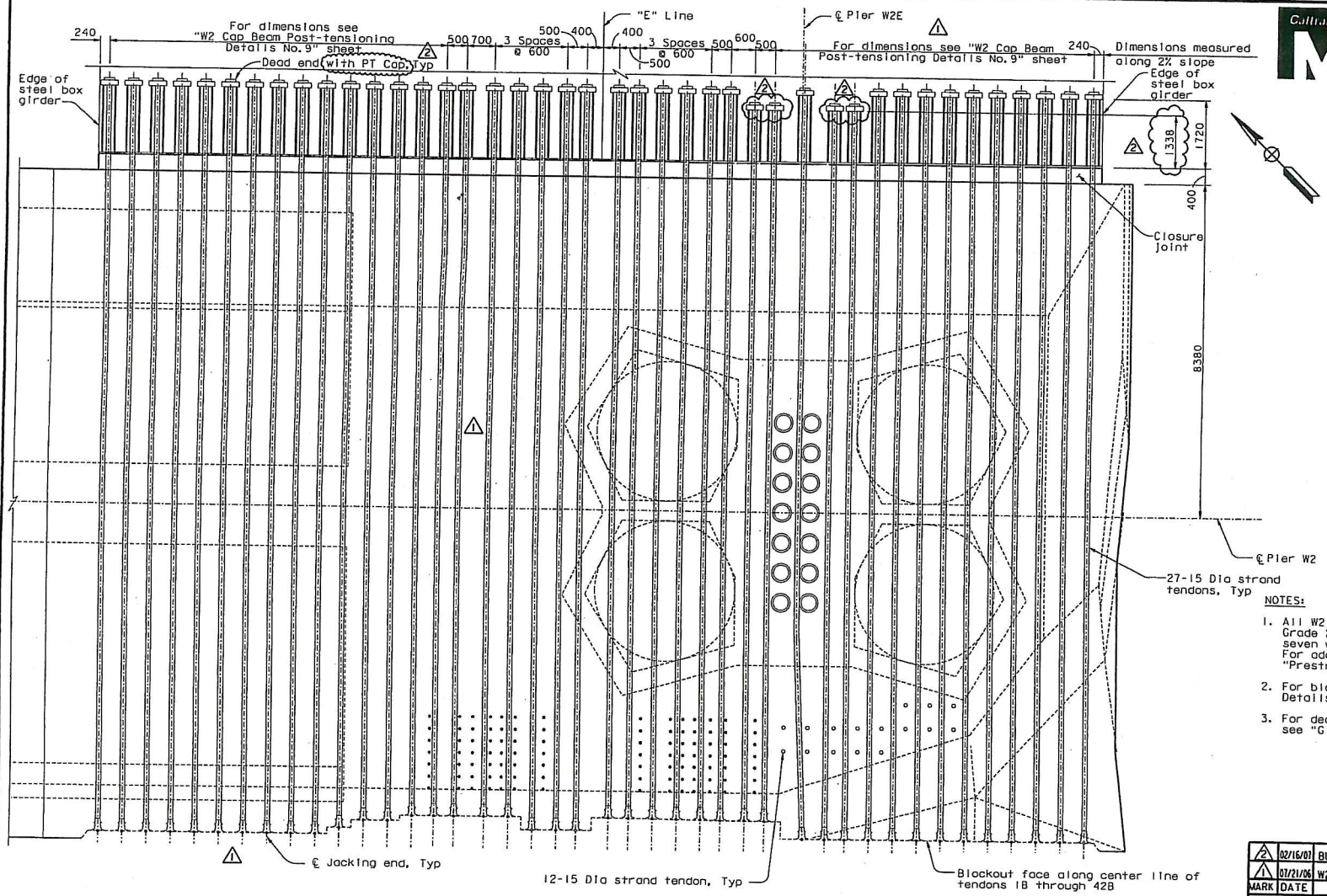

BOTTOM TENDON LAYOUT PLAN

1:50 ("E Line")

NOTES:

1. All W2 cap beam continuity tendons are ASTM A416 Grade 270 (fu=1860 MPa), low relaxation, 27-15 Dia seven wire strand PT, unless specified otherwise. For additional prestressing details, see "Prestressing Notes" sheet.
2. For blockout details, see "W2 Cap Beam Blockout Details" sheets.
3. For dead end anchor bearing steel grillage, see "Girder At Pier W2 No. 4" sheet.

DIST.	COUNTY	ROUTE	KILOMETER POST TOTAL PROJECT	SHEET NO.	TOTAL SHEETS
04	SF	80	13.2/13.9	467R2	1204

REGISTERED ENGINEER - CIVIL

12-6-04
PLANS APPROVAL DATE

REGISTERED PROFESSIONAL ENGINEER John Sun No. C 54648 Exp. 12/31/05 CIVIL STATE OF CALIFORNIA

The State of California or its officers or agents shall not be responsible for the accuracy or completeness of electronic copies of this plan sheet.

T.Y. LIN / MOFFATT & NICHOL
825 BATTERY STREET
SAN FRANCISCO, CA 94111

Caltrans now has a web site! To get to the web site, go to: http://www.dot.ca.gov

REGISTERED PROFESSIONAL ENGINEER Paul P. Duxbury No. C 64677 Exp. 06/30/07 CIVIL STATE OF CALIFORNIA

FOR REVISIONS ONLY

MARK	DATE	DESCRIPTIONS	BY	CH'D	CCO#
2	02/16/07	BULKHEAD AT GIRDER PIER W2	JD	AS	27
1	07/21/06	W2 CAP BEAM ISD	JD	NV	23

REVISIONS

CONTRACT CHANGE ORDER NO. 27
SHEET 4 OF 18

100 % PS&E

ALL DIMENSIONS ARE IN MILLIMETERS UNLESS OTHERWISE SHOWN

R. Vallzadeh/V. Toon/Y.L./N.L./F.C.
DESIGN OVERSIGHT
Y. Lu
SIGN OFF DATE 02/18/07

DESIGN	BY J. Sun	CHECKED N. Chen	
DETAILS	BY J. Duxbury	CHECKED M. Chen	
QUANTITIES	BY S. Shi	CHECKED D. Harrison	

ORIGINAL SCALE IN MILLIMETERS FOR REDUCED PLANS 0 30 40 50 60 70 80 90 100

PREPARED FOR THE STATE OF CALIFORNIA DEPARTMENT OF TRANSPORTATION

R. Manzanarez
PROJECT ENGINEER

BRIDGE NO. 34-0006L/R
KILOMETER POST 13.2/13.9
CU 04
EA 0120F1

DISREGARD PRINTS BEARING EARLIER REVISION DATES
REVISION DATES (PRELIMINARY STAGE)

SAN FRANCISCO OAKLAND BAY BRIDGE
EAST SPAN SEISMIC SAFETY PROJECT
SELF-ANCHORED SUSPENSION BRIDGE
(SUPERSTRUCTURE & TOWER)

W2 CAP BEAM POST-TENSION DETAILS NO. 6

SHEET 050R2 OF

FILE => I:\bb\04-012001\sas\contract plans and cco\cco\in progress\cco#27\oacpt06.dgn

USERNAME => VISITOR DATE PLOTTED => 15 MAR 2007 TIME PLOTTED => 16:06:07

Rev. Date: 5-18-98

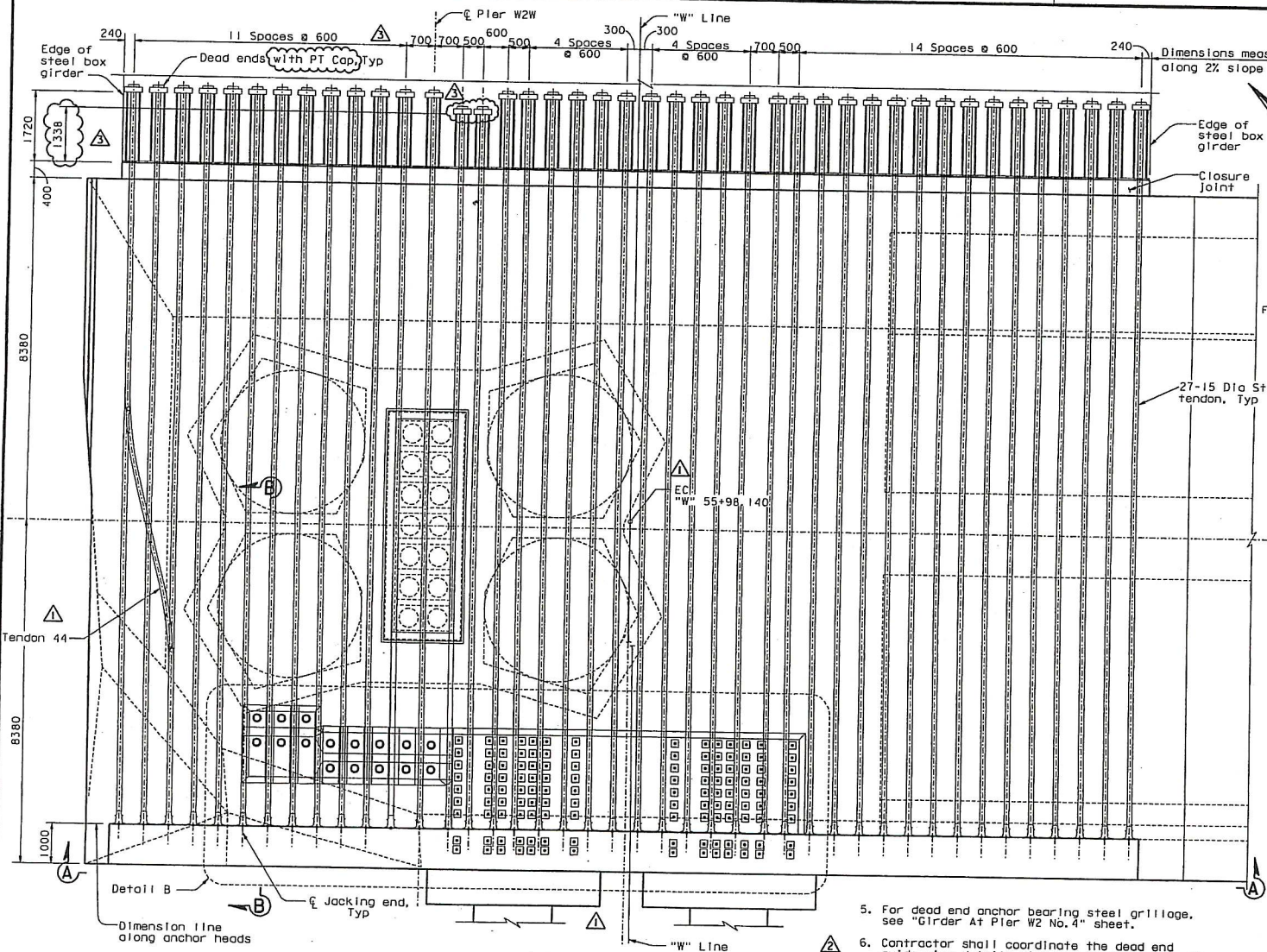

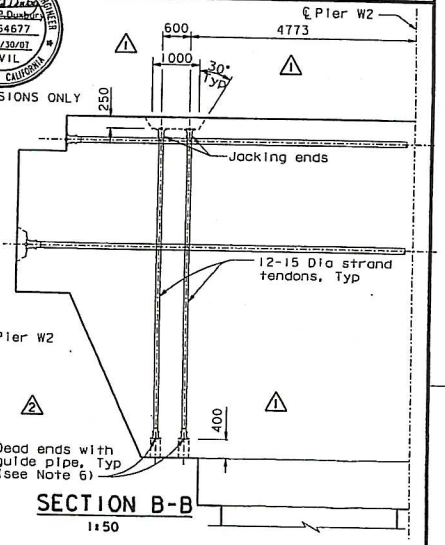

SECTION B-B
1:50

TOP TENDON LAYOUT PLAN ("W" Line)
1:50

ALL DIMENSIONS ARE IN MILLIMETERS UNLESS OTHERWISE SHOWN

NOTES:

1. For Section A-A, see "W2 Cap Beam Post-Tensioning Details No. 9" sheet.
2. For Detail B, see "W2 Cap Beam Post-Tensioning Details No. 10" sheet.
3. All W2 cap beam continuity tendons are ASTM A416 Grade 270 (fu=1860 MPa), low relaxation, 27-15 Dia seven wire strand PT, unless specified otherwise. For additional prestressing details, see "Prestressing Notes" sheet.
4. For blockout details, see "W2 Cap Beam Blockout Details" sheets.
5. For dead end anchor bearing steel grillage, see "Girder At Pier W2 No. 4" sheet.
6. Contractor shall coordinate the dead end guide pipe details with the PT System Supplier and shall submit them to the Engineer for review and approval. Contractor shall grout the guide pipe after stressing operations have been completed.

MARK	DATE	DESCRIPTIONS	BY	CH'D	CCO#
3	02/16/07	BULKHEAD AT GIRDER PIER W2	JD	AS	27
2	01/31/07	CORROSION PROTECTION	JD	AS	16
1	07/21/06	W2 CAP BEAM ISD	JD	NV	23

REVISIONS

CONTRACT CHANGE ORDER NO. 27
SHEET 5 OF 18

DIST.	COUNTY	ROUTE	KILOMETER POST TOTAL PROJECT	SHEET NO.	TOTAL SHEETS
04	SF	80	13.2/13.9	468R3	1204

REGISTERED ENGINEER - CIVIL
12-6-04
PLANS APPROVAL DATE

The State of California or its officers or agents shall not be responsible for the accuracy or completeness of electronic copies of this plan sheet.

REGISTERED PROFESSIONAL ENGINEER John Sun No. C 54648 Exp. 12/31/05 CIVIL STATE OF CALIFORNIA

T.Y. LIN / MOFFATT & NICHOL
825 BATTERY STREET
SAN FRANCISCO, CA 94111

Caltrans now has a web site! To get to the web site, go to: http://www.dot.ca.gov

REGISTERED PROFESSIONAL ENGINEER Dodge P. Duxbury No. C 64677 Exp. 06/30/07 CIVIL STATE OF CALIFORNIA

FOR REVISIONS ONLY

SAN FRANCISCO OAKLAND BAY BRIDGE
EAST SPAN SEISMIC SAFETY PROJECT
SELF-ANCHORED SUSPENSION BRIDGE
(SUPERSTRUCTURE & TOWER)

W2 CAP BEAM POST-TENSION' DETAILS NO. 7

R. Valizadeh/V. Toan/Y.L./W.L./F.C.
DESIGN OVERSIGHT
SIGN OFF DATE 02/10/07
Rev. Date: 5-15-98

	BY	CHECKED
DESIGN	J. Sun	M. Chen
DETAILS	J. Duxbury	M. Chen
QUANTITIES	S. Shi	D. Harrison

ORIGINAL SCALE IN MILLIMETERS FOR REDUCED PLANS

PREPARED FOR THE STATE OF CALIFORNIA DEPARTMENT OF TRANSPORTATION

R. Manzanarez
PROJECT ENGINEER

BRIDGE NO. 34-0006L/R
KILOMETER POST 13.2/13.9

CU 04
EA 0120F1

DISREGARD PRINTS BEARING EARLIER REVISION DATES

REVISION DATES (PRELIMINARY STAGE)

SHEET 051R3 OF

FILE => I:\bb\04-012001\sas\contract plans and cco\cco\in progress\cco#27\oecpt07.dgn

100 % PS&E

USERNAME => visitor DATE PLOTTED => 15 MAR 2007 TIME PLOTTED => 16:04:55

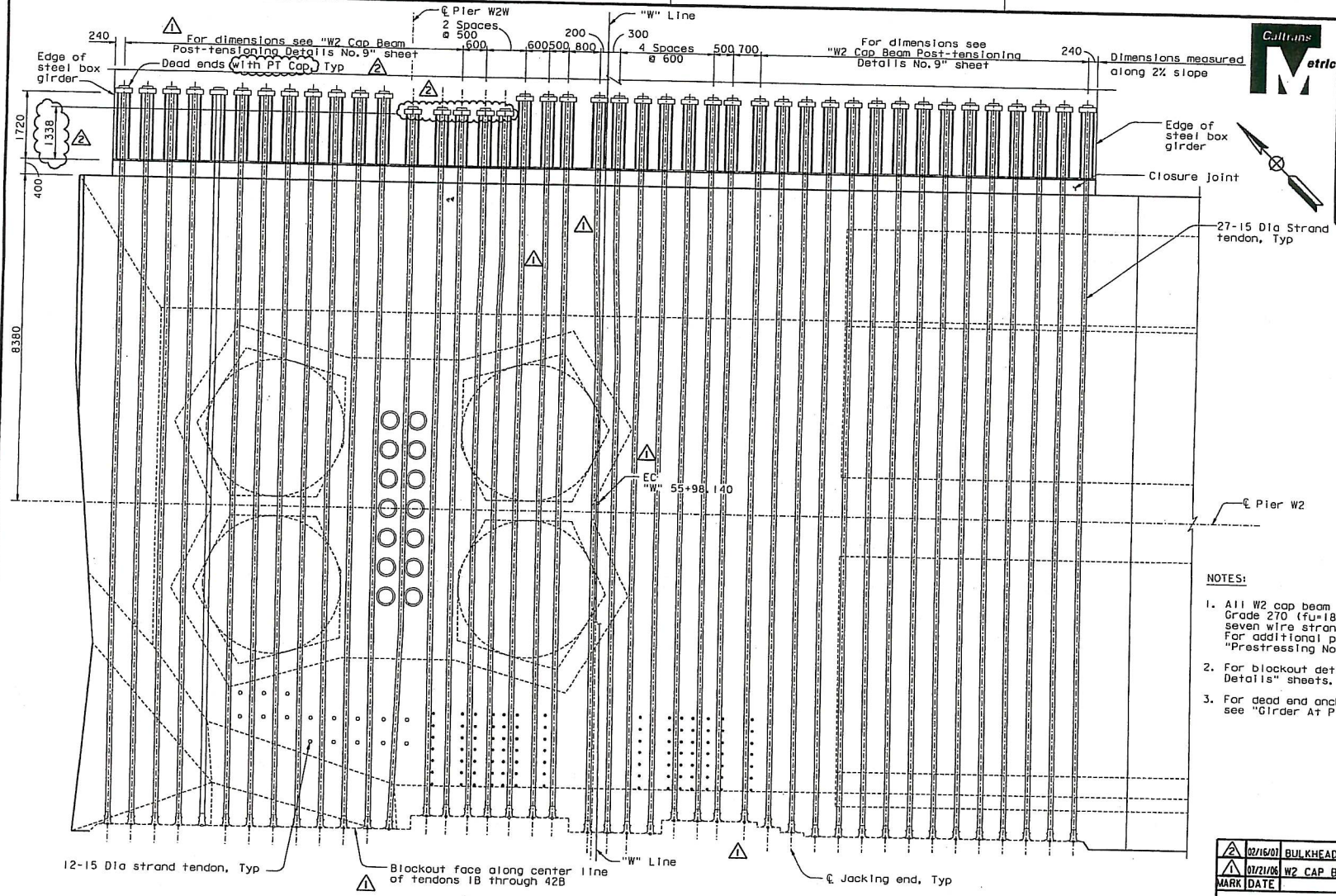

BOTTOM TENDON LAYOUT PLAN ("W" Line)

1:50

DIST.	COUNTY	ROUTE	KILOMETER POST TOTAL PROJECT	SHEET NO.	TOTAL SHEETS
04	SF	80	13.2/13.9	469R2	1204

REGISTERED ENGINEER - CIVIL

12-6-04

PLANS APPROVAL DATE

REGISTERED PROFESSIONAL ENGINEER John Sun No. C 54648 Exp. 12/31/05 CIVIL STATE OF CALIFORNIA

The State of California or its officers or agents shall not be responsible for the accuracy or completeness of electronic copies of this plan sheet.

T.Y. LIN / MOFFATT & NICHOL
825 BATTERY STREET
SAN FRANCISCO, CA 94111

Caltrans now has a web site! To get to the web site, go to: http://www.dot.ca.gov

NOTES:

1. All W2 cap beam continuity tendons are ASTM A416 Grade 270 (fu=1860 MPa), low relaxation, 27-15 Dia seven wire strand PT, unless specified otherwise. For additional prestressing details, see "Prestressing Notes" sheet.
2. For blockout details, see "W2 Cap Beam Blockout Details" sheets.
3. For dead end anchor bearing steel grillage, see "Girder At Pier W2 No.4" sheet.

REGISTERED PROFESSIONAL ENGINEER Jodie P. Duxbury No. C 64677 Exp. 06/30/07 CIVIL STATE OF CALIFORNIA

FOR REVISIONS ONLY

MARK	DATE	DESCRIPTIONS	BY	CH'D	CCO#
2	02/16/07	BULKHEAD AT GIRDER PIER W2	JD	AS	27
1	07/21/06	W2 CAP BEAM ISD	JD	NV	23

REVISIONS

CONTRACT CHANGE ORDER NO. 27
SHEET 6 OF 18

ALL DIMENSIONS ARE IN MILLIMETERS UNLESS OTHERWISE SHOWN

R. Valizadeh/V. Toan/Y.L./W.L./F.C.
DESIGN OVERSIGHT
SIGN OFF DATE 02/16/07
Rev. Date: 5-18-98

DESIGN	BY J. Sun	CHECKED	M. Chen
DETAILS	BY J. Duxbury	CHECKED	M. Chen
QUANTITIES	BY S. Shi	CHECKED	D. Harrison

ORIGINAL SCALE IN MILLIMETERS FOR REDUCED PLANS

PREPARED FOR THE STATE OF CALIFORNIA DEPARTMENT OF TRANSPORTATION

R. Manzanarez
PROJECT ENGINEER

BRIDGE NO. 34-0006L/R
KILOMETER POST 13.2/13.9

CU 04
EA 0120F1

SAN FRANCISCO OAKLAND BAY BRIDGE
EAST SPAN SEISMIC SAFETY PROJECT
SELF-ANCHORED SUSPENSION BRIDGE
(SUPERSTRUCTURE & TOWER)

W2 CAP BEAM POST-TENSION DETAILS NO. 8

DISREGARD PRINTS BEARING EARLIER REVISION DATES

REVISION DATES (PRELIMINARY STAGE) 06/26/98 05/31/01 04/26/02 01/31/02 12/13/02

SHEET 052R2 OF

FILE => I:\bb\04-012001\sas\contract plans and cco\cco\in progress\cco#27\oacpt08.dgn

100 % PS&E

USERNAME => visitor DATE PLOTTED => 15 MAR 2007 TIME PLOTTED => 16:07:35

DIST.	COUNTY	ROUTE	KILOMETER POST TOTAL PROJECT	SHEET NO.	TOTAL SHEETS
04	SF	80	13.2/13.9	472R2	1204

REGISTERED ENGINEER - CIVIL

12-6-04
PLANS APPROVAL DATE

REGISTERED PROFESSIONAL ENGINEER John Sun No. C 54648 Exp. 12/31/05 CIVIL STATE OF CALIFORNIA

The State of California or its officers or agents shall not be responsible for the accuracy or completeness of electronic copies of this plan sheet.

T.Y. LIN / MOFFATT & NICHOL
825 BATTERY STREET
SAN FRANCISCO, CA 94111

To get to the web site, go to: http://www.dot.ca.gov

Caltrans Metric

REGISTERED PROFESSIONAL ENGINEER Jack P. Duxbury No. C 64677 Exp. 06/30/07 CIVIL STATE OF CALIFORNIA

FOR REVISIONS ONLY

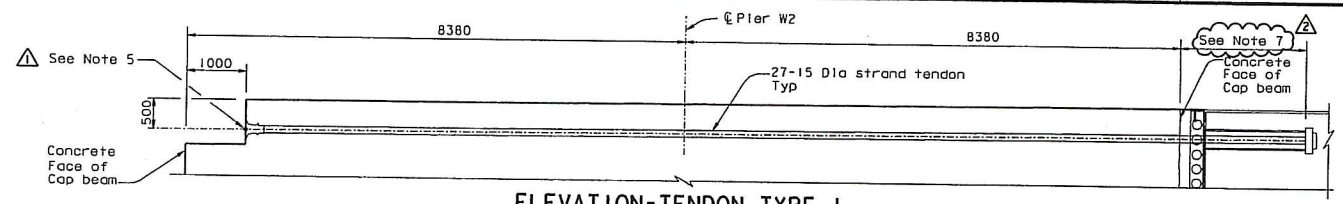

ELEVATION-TENDON TYPE 1

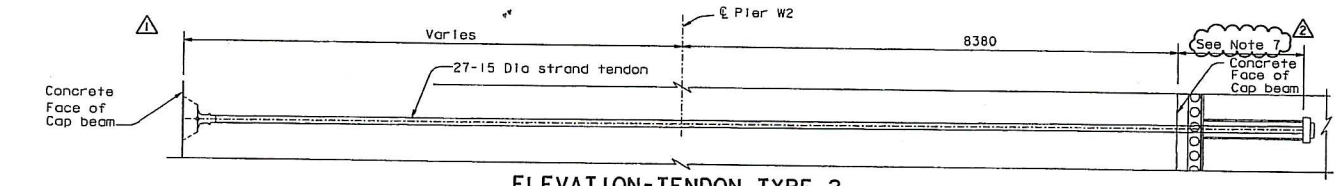

ELEVATION-TENDON TYPE 2

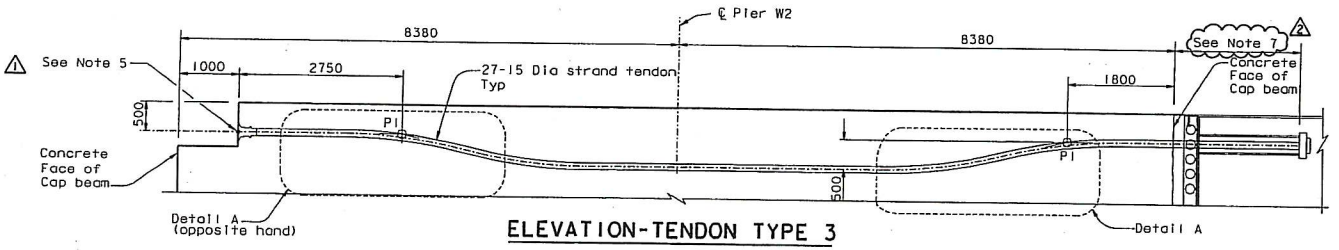

ELEVATION-TENDON TYPE 3

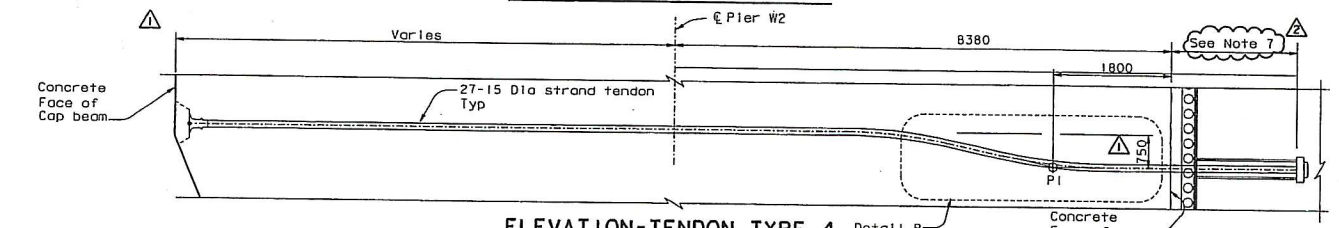

ELEVATION-TENDON TYPE 4

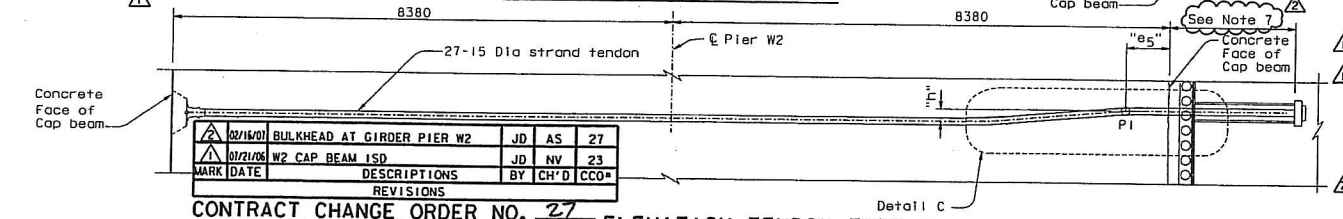

ELEVATION-TENDON TYPE 5

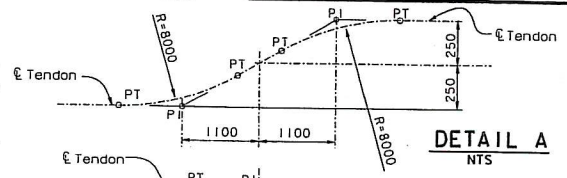

DETAIL A
NTS

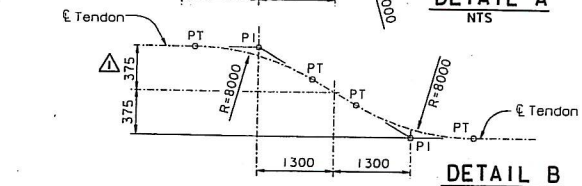

DETAIL B
NTS

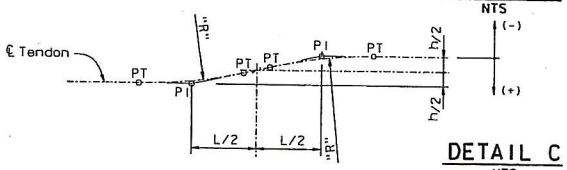

DETAIL C
NTS

NOTES:

1. For additional details, see "W2 Cap Beam Post-Tensioning Details No.5" through "W2 Cap Beam Post-Tensioning Details No.10" sheets.
2. For tendon type designation, see "W2 Cap Beam Post-Tensioning Details No.12" sheet.
3. For PT blockout dimensions, see "W2 Cap Beam Blockout Details" sheets.
4. For dimension "h","L","e5" and "R", see "W2 Cap Beam Post-Tensioning Details No.12" sheet.
5. Adjust vertical face to be normal to the axis of the tendon.
6. Jacking of continuity tendons shall not crush the ducts of the CBT transverse tendons. Where necessary, extra strong steel pipes (ASTM A53 Type S, Grade B, f_y=240 MPa) shall be provided together with necessary hardware connecting the steel pipes to galvanized corrugated steel duct.
7. For extents of post-tensioning into the Girder at Pier W2, see Top and Bottom tendon layout plans on "W2 Cap Beam Post-Tensioning Details No.5 thru No.8" sheets.

MARK	DATE	DESCRIPTIONS	BY	CH'D	CCO#
2	02/16/07	BULKHEAD AT GIRDER PIER W2	JD	AS	27
1	01/21/06	W2 CAP BEAM ISD	JD	NV	23

REVISIONS

CONTRACT CHANGE ORDER NO. 27
SHEET 7 OF 18

ALL DIMENSIONS ARE IN MILLIMETERS UNLESS OTHERWISE SHOWN

R. Valizadeh/V. Toon/Y. L./N. L./F. C.
DESIGN OVERSIGHT
STCH OFF DATE 02/16/07
Rev. Date: 5-15-98

	BY	CHECKED
DESIGN	J. Sun	M. Chen
DETAILS	J. Duxbury	M. Chen
QUANTITIES	S. Shi	D. Harrison

ORIGINAL SCALE IN MILLIMETERS FOR REDUCED PLANS

PREPARED FOR THE STATE OF CALIFORNIA DEPARTMENT OF TRANSPORTATION

CHECKED R. Manzanarez
PROJECT ENGINEER

BRIDGE NO. 34-0006L/R
KILOMETER POST 13.2/13.9

CU 04
EA 0120F1

DISREGARD PRINTS BEARING EARLIER REVISION DATES

REVISION DATES (PRELIMINARY STAGE) 12/1/02

SAN FRANCISCO OAKLAND BAY BRIDGE
EAST SPAN SEISMIC SAFETY PROJECT
SELF-ANCHORED SUSPENSION BRIDGE
(SUPERSTRUCTURE & TOWER)

W2 CAP BEAM POST-TENSIONI DETAILS NO. 11

SHEET 055R2 OF

FILE => I:\bb\04-012001\sos\contract plans and ccs\cco\in progress\cco#27\coecpt11.dgn

USERNAME => visitor DATE PLOTTED => 15 MAR 2007 TIME PLOTTED => 16:08:42

100 % PS&E

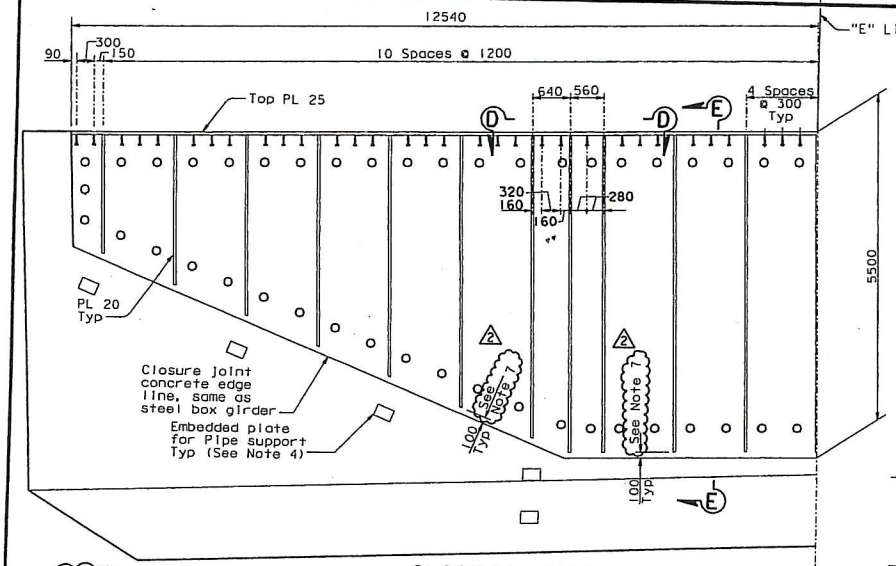

CLOSURE JOINT

(Closure joint reinforcement not shown for clarity)

1:40

NOTES:

6. For extents of post-tensioning into the Girder at Pier W2, see Top and Bottom Tendon layout on "W2 Cap Beam Post-tensioning Details No.5 thru No.8" sheets.
7. For Westbound continuity tendons 28B, 29A and 29B and for Eastbound continuity tendons 29A and 29B, the Contractor may terminate the PL20 vertical stiffener 125 mm above the bottom tendons and below the top tendons.
8. At the Contractor's option, hairpin dimension may be reduced to 1200 min.
9. At the Contractor's option, ultimate splice couplers may be used on #19 hairpins.
10. Bundled hairpins shall be placed along the entire box girder interface perimeter.

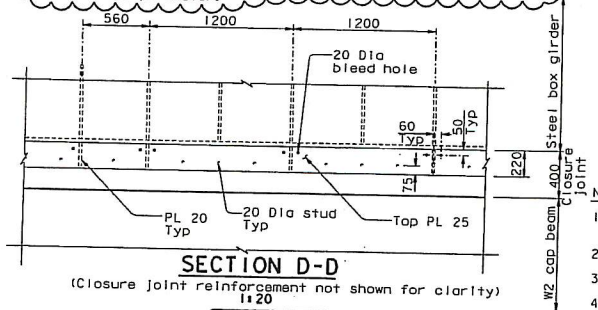

SECTION D-D

(Closure joint reinforcement not shown for clarity)

1:20

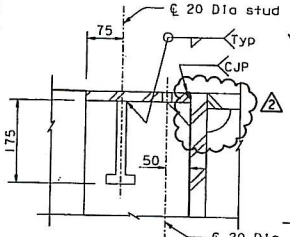

DETAIL A

1:5

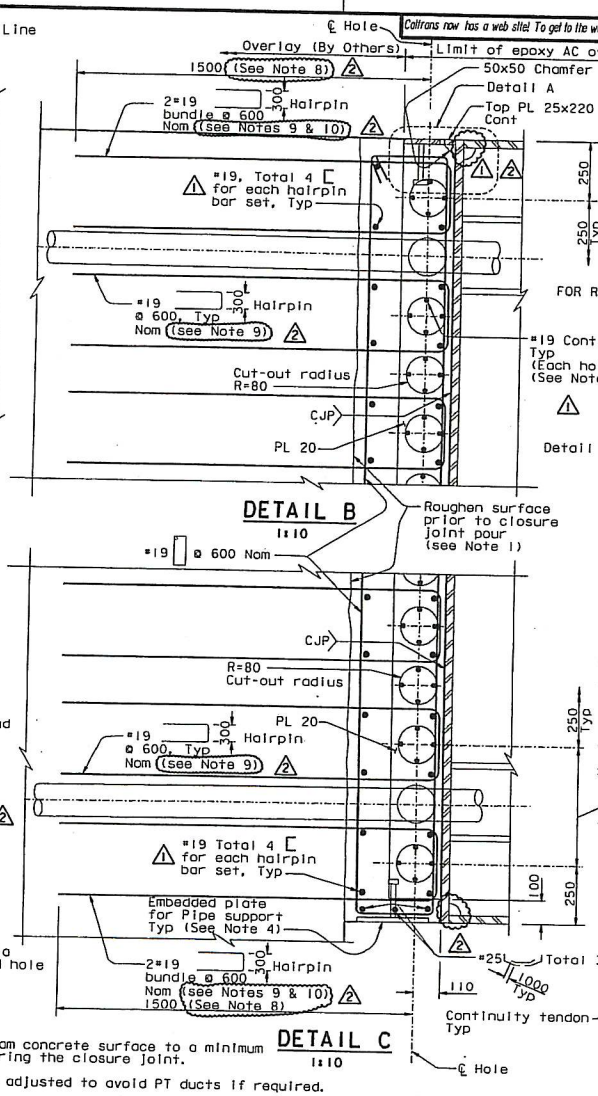

DETAIL B

1:10

DETAIL C

1:10

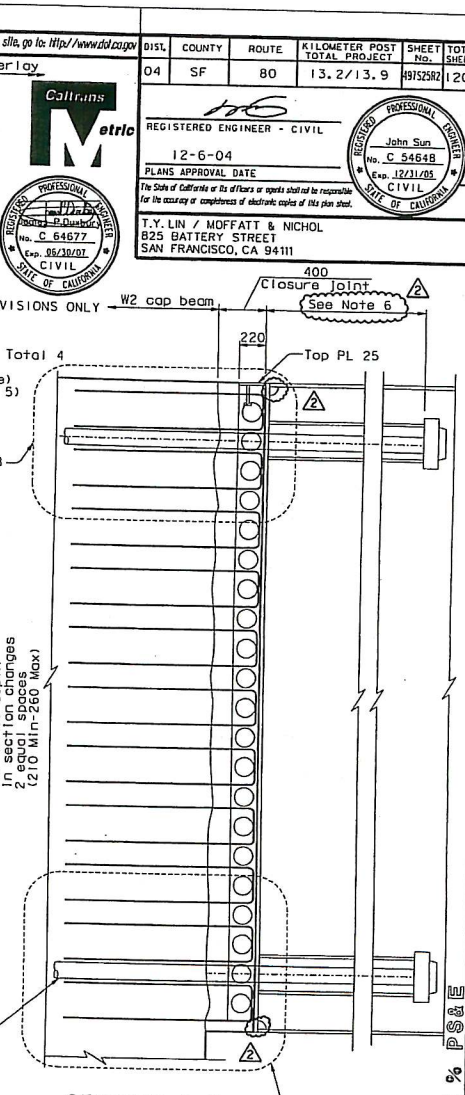

SECTION E-E

1:20

NOTES:

1. Roughen the existing W2 Cap Beam concrete surface to a minimum of 5 mm amplitude prior to pouring the closure joint.
2. Reinforcement spacing shall be adjusted to avoid PT ducts if required.
3. All plate shall be ASTM A709M HPS 485W, unless specified otherwise.
4. For pipe support locations and details, see "Road Plans".
5. At the Contractor's option, 2-#29 bundled bars may be used. ⚠

ALL DIMENSIONS ARE IN MILLIMETERS UNLESS OTHERWISE SHOWN

MARK	DATE	DESCRIPTIONS	BY	CH'D	CCO#
2	02/16/07	BULKHEAD AT GIRDER PIER W2	JD	AS	27
1	01/31/07	WEST DEVIATION SADDLE GEOMETRY	JD	AS	15
0	07/21/06	GENERAL REVISIONS	JD	AS	23

REVISIONS

CONTRACT CHANGE ORDER NO. 27
SHEET 8 OF 18

R. Vallizadeh/V. Toan/Y.L./W.L./F.C.
DESIGN OVERSIGHT
Roya Vallizadeh / Vong Toan / Y. Liu
SIGN OFF DATE 02/16/07
Rev. Date: 5-18-95

	BY	CHECKED
DESIGN	J. Sun	M. Chen
DETAILS	J. Duxbury	M. Chen
QUANTITIES	S. Shi	D. Harrison

PREPARED FOR THE STATE OF CALIFORNIA DEPARTMENT OF TRANSPORTATION

ORIGINAL SCALE IN MILLIMETERS FOR REDUCED PLANS 0 1L 30 40 50 60 70 80 90 100

R. Manzanarez
PROJECT ENGINEER

BRIDGE NO. 34-0006L/R
KILOMETER POST 13.2/13.9

CU 04
EA 0120F1

DISREGARD PRINTS BEARING EARLIER REVISION DATES 01/31/06

REVISION DATES (PRELIMINARY STAGE) SHEET OF 08052SR2

FILE => I:\bb\04-012001\sas\contract plans and cco\cco\in progress\cco#27\sup cco#27\sacap48r-s.dgn

USERNAME => pfcm

DATE PLOTTED => 10 MAY 2007 TIME PLOTTED => 14:59:37

100 % PS&E

Caltrans now has a web site! To get to the web site, go to: http://www.dot.ca.gov

Caltrans Metric

DIST.	COUNTY	ROUTE	KILOMETER POST TOTAL PROJECT	SHEET No.	TOTAL SHEETS
04	SF	80	13.2/13.9	49752SR2	1204

REGISTERED ENGINEER - CIVIL
12-6-04
PLANS APPROVAL DATE
The State of California or its officers or agents shall not be responsible for the accuracy or completeness of electronic copies of this plan sheet.

REGISTERED PROFESSIONAL ENGINEER John Sun No. C 54648 Exp. 12/31/05 CIVIL STATE OF CALIFORNIA

REGISTERED PROFESSIONAL ENGINEER Jeffrey P. Duxbury No. C 64677 Exp. 06/30/07 CIVIL STATE OF CALIFORNIA

FOR REVISIONS ONLY

T.Y. LIN / MOFFATT & NICHOL
825 BATTERY STREET
SAN FRANCISCO, CA 94111

SAN FRANCISCO OAKLAND BAY BRIDGE
EAST SPAN SEISMIC SAFETY PROJECT
SELF-ANCHORED SUSPENSION BRIDGE
(SUPERSTRUCTURE & TOWER)

W2 CAP BEAM REINFORCEMENT DETAILS NO. 49

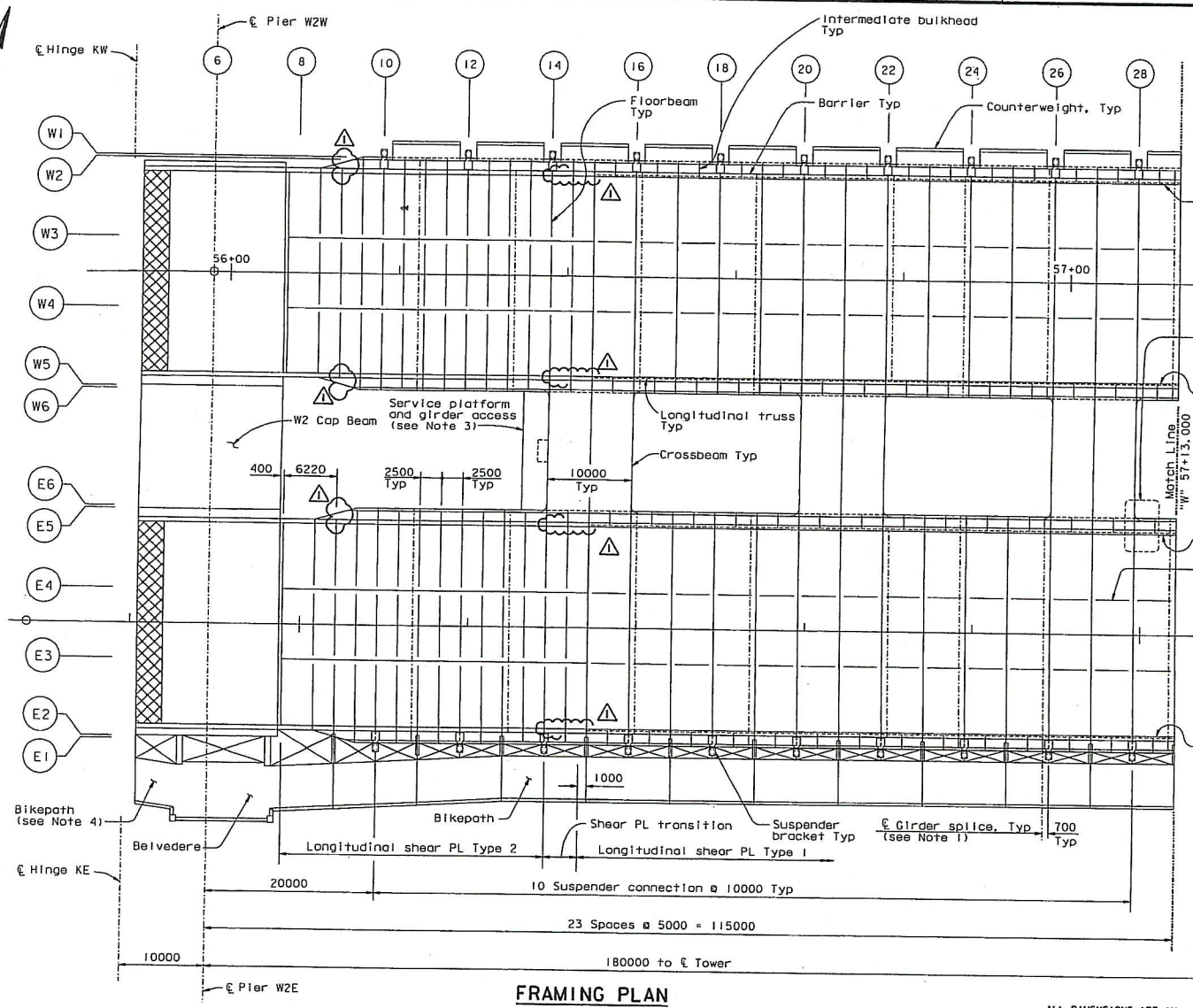

FRAMING PLAN

1:250

DIST.	COUNTY	ROUTE	KILOMETER POST TOTAL PROJECT	SHEET NO.	TOTAL SHEETS
04	SF	80	13.2/13.9	619R1	1204

Caltrans Metric

REGISTERED ENGINEER - CIVIL

12-6-04

PLANS APPROVAL DATE

The State of California or its officers or agents shall not be responsible for the accuracy or completeness of electronic copies of this plan sheet.

REGISTERED PROFESSIONAL ENGINEER Marwan N. Nader No. C 054426 Exp. 12/31/07 CIVIL STATE OF CALIFORNIA

T.Y. LIN / MOFFATT & NICHOL
825 BATTERY STREET
SAN FRANCISCO, CA 94111

Caltrans now has a web site! To get to the web site, go to: http://www.dot.ca.gov

MARK	DATE	DESCRIPTIONS	BY	CH'D	CCO#
1	02/16/07	BULKHEAD AT GIRDER PIER W2	MN	AS	27

REVISIONS

CONTRACT CHANGE ORDER NO. 27
SHEET 9 OF 18

LEGEND:

Blockout for modular joint

NOTES:

1. For girder splice details, see "Typical Girder Details" sheets.
2. For modular joint details, see "Hinge K Expansion Joint Details" sheet.
3. For service platform details, see "Road Plans". For girder access details, see "Girder Access Details" sheets.
4. Indicated area of bikepath to be installed by Others after demolition of existing structure. For details, see "Bikepath Layout" sheets.

100 % PS&E

ALL DIMENSIONS ARE IN MILLIMETERS UNLESS OTHERWISE SHOWN

R. Vallzadeh/V. Toan/Y.L./W.L./F.C.
DESIGN OVERSIGHT
SIGN OFF DATE 02/16/07
Rev. Date: 5-15-98

	BY	CHECKED
DESIGN	M. Nader	T. McMeans
DETAILS	G. Baker	T. McMeans
QUANTITIES	G. Baker	M. Roberts

ORIGINAL SCALE IN MILLIMETERS FOR REDUCED PLANS

PREPARED FOR THE STATE OF CALIFORNIA DEPARTMENT OF TRANSPORTATION

R. Manzanarez
PROJECT ENGINEER

BRIDGE NO. 34-0006L/R
KILOMETER POST 13.2/13.9

CU 04
EA 0120F1

DISREGARD PRINTS BEARING EARLIER REVISION DATES

REVISION DATES (PRELIMINARY STAGE)

SAN FRANCISCO OAKLAND BAY BRIDGE
EAST SPAN SEISMIC SAFETY PROJECT
SELF-ANCHORED SUSPENSION BRIDGE
(SUPERSTRUCTURE & TOWER)

GIRDER FRAMING PLAN NO. 1

SHEET 202R1

FILE => I:\bb\04-012001\sas\contract plans and cco\cco\in progress\cco#27\aggir01.dgn

USERNAME => allshansky DATE PLOTTED => 16 MAR 2007 TIME PLOTTED => 07:41:45

DIST.	COUNTY	ROUTE	KILOMETER POST TOTAL PROJECT	SHEET NO.	TOTAL SHEETS
04	SF	80	13.2/13.9	646R1	1204

George Baker
REGISTERED ENGINEER - CIVIL
12-6-04
PLANS APPROVAL DATE

REGISTERED PROFESSIONAL ENGINEER George S. Baker No. C57112 Exp. 12/31/05 CIVIL STATE OF CALIFORNIA

The State of California or its officers or agents shall not be responsible for the accuracy or completeness of electronic copies of this plan sheet.

T.Y. LIN / MOFFATT & NICHOL
825 BATTERY STREET
SAN FRANCISCO, CA 94111

Caltrans now has a web site! To get to the web site, go to: http://www.dot.ca.gov

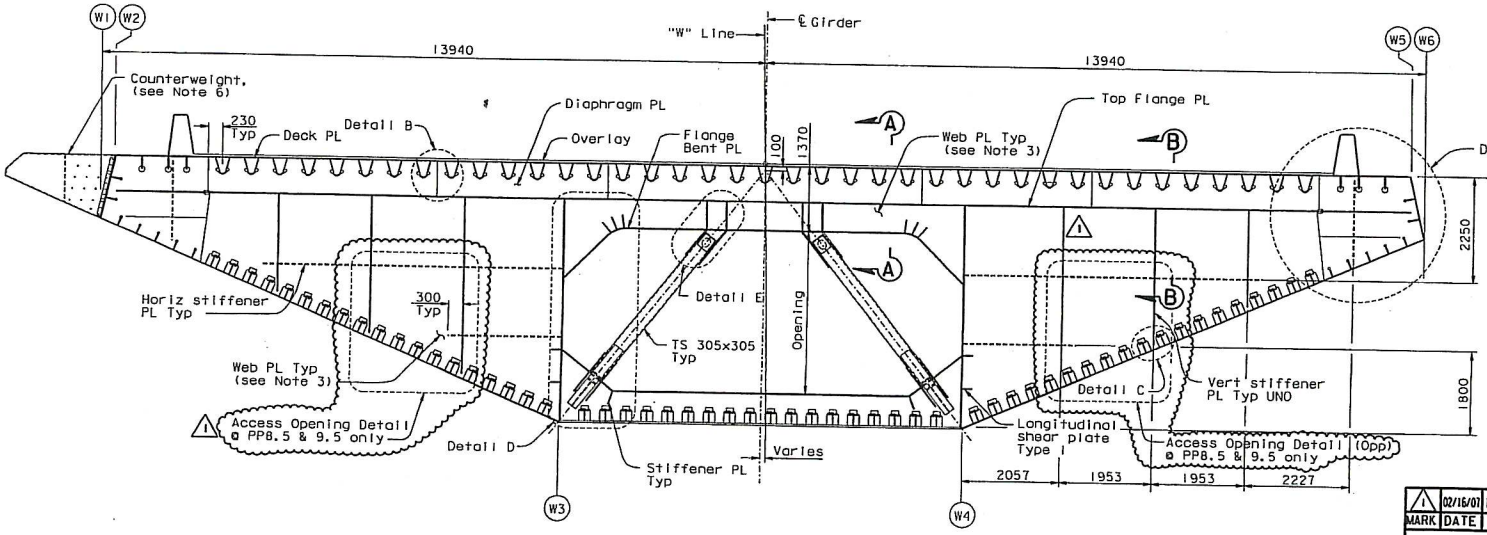

"W" LINE

TYPICAL FLOORBEAM SECTION (See Note 1)

1:50

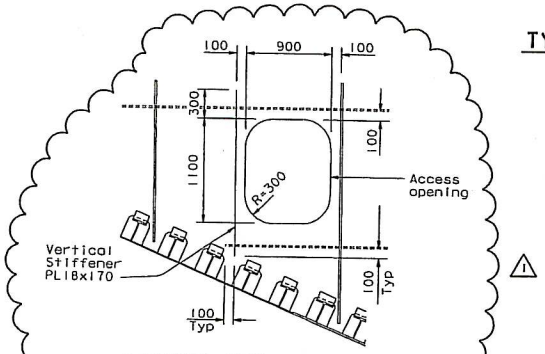

ACCESS OPENING DETAIL

(PP9.5 shown, PP8.5 similar)

NOTES:

1. Typical floorbeam is located at Panel Points 9 through 115 and intermediate Panel Points 8.5 to 9.5.
2. For floorbeam at intermediate Panel Points 10.5, 11.5, 12.5, 13.5, 111.5, 112.5, 113.5, 114.5, 115.2 and 115.5, see "Typical Floorbeam Details No.8" sheet.
3. For extents and thickness of floorbeam web, see "Typical Floorbeam Details No.2" sheet.
4. All dimensions are taken with respect to a reference line tangent to top deck plate.
5. For Sections A-A and B-B and Details B and C, see "Typical Floorbeam Details No.4" sheet.
6. For counterweight details, see "Typical Girder Details No.17" sheet.
7. For "Typical Floorbeam Details" sheets all bolts shall be detailed according to the bolt dimension table. See "Typical Girder Details No.1" sheet. All bolts are HS, unless noted otherwise.
8. For "Typical Floorbeam Details" sheets unless noted otherwise all fillet welds shall be 6 mm for plate sizes not greater than 20 mm. For plates greater than 20 mm fillet welds shall be 8 mm unless noted otherwise.
9. For Detail A, see "Typical Floorbeam Details No.3" sheet.
10. For Details D and E, see "Typical Floorbeam Details No.5" sheet.

Daniel J. Turner
REGISTERED PROFESSIONAL ENGINEER Daniel J. Turner No. C 65033 Exp. 06/30/07 CIVIL STATE OF CALIFORNIA

FOR REVISIONS ONLY

MARK	DATE	DESCRIPTIONS	BY	CH'D	CCO#
1	02/16/07	BULKHEAD AT GIRDER PIER W2	AS	DT	27
		REVISIONS			

CONTRACT CHANGE ORDER NO. 27
SHEET 10 OF 18

100 % PS&E

ALL DIMENSIONS ARE IN MILLIMETERS UNLESS OTHERWISE SHOWN

R. Vallzadeh/V. Toan/Y.L./N.L./F.C.
DESIGN OVERSIGHT
Y. Liu
SIGN OFF DATE 02/16/0
Rev. Date: 5-18-98

	BY	CHECKED
DESIGN	G. Baker	P. Ritchie
DETAILS	S. Camo	T. McMeans
QUANTITIES	C. Mauch	M. Roberts

ORIGINAL SCALE IN MILLIMETERS FOR REDUCED PLANS 0 30 40 50 60 70 80 90 100

PREPARED FOR THE STATE OF CALIFORNIA DEPARTMENT OF TRANSPORTATION

R. Manzanarez
PROJECT ENGINEER

BRIDGE NO. 34-0006L/R
KILOMETER POST 13.2/13.9
CU 04
EA 0120F1

DISREGARD PRINTS BEARING EARLIER REVISION DATES

SAN FRANCISCO OAKLAND BAY BRIDGE
EAST SPAN SEISMIC SAFETY PROJECT
SELF-ANCHORED SUSPENSION BRIDGE
(SUPERSTRUCTURE & TOWER)

TYPICAL FLOORBEAM DETAILS NO. 1

REVISION DATES (PRELIMINARY STAGE)

SHEET 229R1 OF

FILE => I:\bb\04-012001\sas\contract plans and cco\cco\in progress\cco#27\cgftb01.dgn

USERNAME => vignarova@SYE PLOTTED => 19 MAR 2007 TIME PLOTTED => 13:49:44

Caltrans now has a web site! To get to the web site, go to: http://www.dot.ca.gov

Caltrans Metric

DIST.	COUNTY	ROUTE	KILOMETER POST TOTAL PROJECT	SHEET NO.	TOTAL SHEETS
04	SF	80	13.2/13.9	665R1	1204

George Baker
REGISTERED ENGINEER - CIVIL
12-6-04
PLANS APPROVAL DATE

REGISTERED PROFESSIONAL ENGINEER George S. Baker No. C57112 Exp. 12/31/05 CIVIL STATE OF CALIFORNIA

The State of California or its officers or agents shall not be responsible for the accuracy or completeness of electronic copies of this plan sheet.

T.Y. LIN / MOFFATT & NICHOL
825 BATTERY STREET
SAN FRANCISCO, CA 94111

MARK	DATE	DESCRIPTIONS	BY	CH'D	CCO#
1	02/16/07	BULKHEAD AT GIRDER PIER W2	GB	DT	27

REVISIONS

CONTRACT CHANGE ORDER NO. 27
SHEET 11 OF 18

REGISTERED PROFESSIONAL ENGINEER Donald J. Turner No. C 65033 Exp. 06/30/07 CIVIL STATE OF CALIFORNIA

FOR REVISIONS ONLY

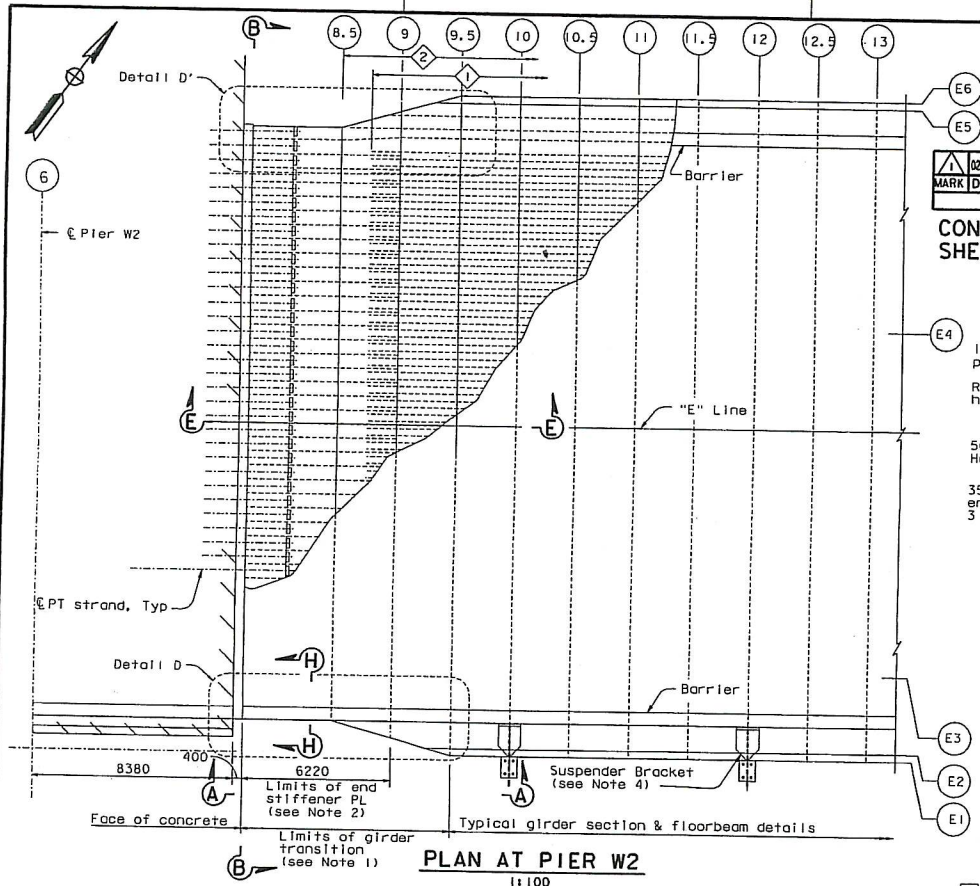

PLAN AT PIER W2
1:100

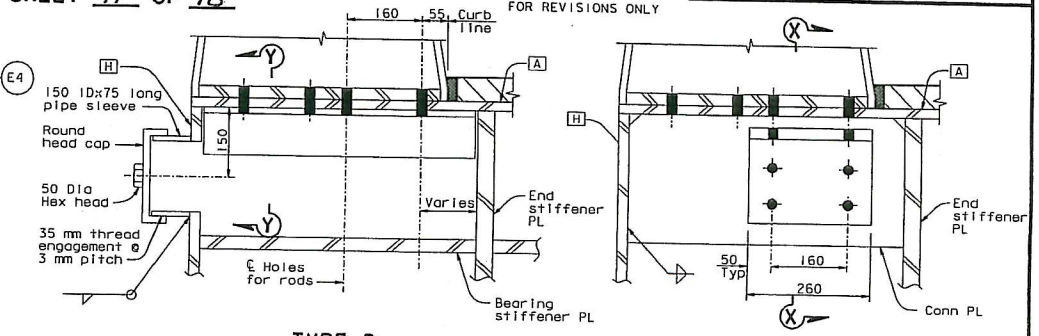

TYPE D

TYPE E

BARRIER CONNECTION DETAILS (See Note 3)
1:5

LEGEND:

- [A] Girder face designation A
- Stiffener Type 2, 3, 9, 10, 11 or other stiffener
- Stiffener Type 1 leg
- Stiffener Type 1 designation

NOTES:

1. For layout of girder transition, see "Girder At Pier W2 No.5" sheet. For floorbeam at PP8.5 and PP9, see "Girder At Pier W2 No.6" sheet.
2. For limits of end stiffener plate and layout of transition to typical girder stiffeners, see "Girder At Pier W2 No.3 and 4" sheets.
3. For location of barrier connection Types D and E, see "Girder At Pier W2 No.3" sheet. For connection details not shown, see "Typical Girder Details No.14" sheet.
4. For suspender bracket, see "Suspender Bracket Details No.1, 2 and 3" sheets.
5. For "Girder At Pier W2" sheets all bolts shall be detailed according to the bolt dimension table, see "Typical Girder Details No.1" sheet. All bolts are HS unless noted otherwise.
6. For "Girder At Pier W2" sheets unless noted otherwise all fillet welds shall be 6 mm for plate sizes not greater that 20 mm. For plates greater than 20 mm fillet welds shall be 8 mm unless noted otherwise.
7. For end-view Section B-B, see "Girder At Pier W2 No.2" sheet.
8. For Section H-H and Details D and D', see "Girder At Pier W2 No.3" sheet.
9. For Section E-E, see "Girder At Pier W2 No.4" sheet.

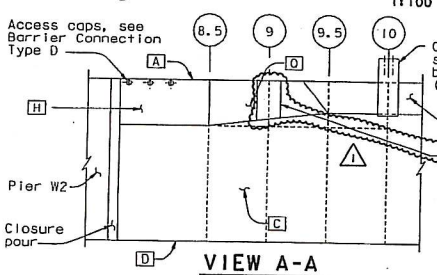

VIEW A-A
1:100

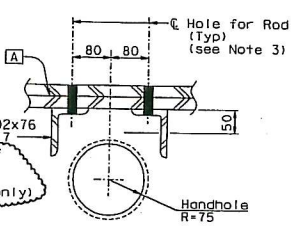

SECTION Y-Y
1:5

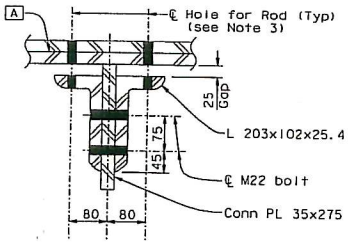

SECTION X-X
1:5

ALL DIMENSIONS ARE IN MILLIMETERS UNLESS OTHERWISE SHOWN

R. Vallizadeh/V. Tran/Y.L./W.L./F.C.
DESIGN OVERSIGHT
Y. Liu
SIGN OFF DATE 02/18/10
Rev. Date: 3-18-98

	BY	CHECKED
DESIGN	G. Baker	P. Ritchie
DETAILS	M. Gulyas	T. McMeans
QUANTITIES	C. Mauch	M. Roberts

ORIGINAL SCALE IN MILLIMETERS FOR REDUCED PLANS 0 30 40 50 60 70 80 90 100

PREPARED FOR THE STATE OF CALIFORNIA DEPARTMENT OF TRANSPORTATION

R. Manzanarez
PROJECT ENGINEER

CU 04
EA 0120F1

BRIDGE NO. 34-0006L/R
KILOMETER POST 13.2/13.9

SAN FRANCISCO OAKLAND BAY BRIDGE
EAST SPAN SEISMIC SAFETY PROJECT
SELF-ANCHORED SUSPENSION BRIDGE
(SUPERSTRUCTURE & TOWER)

GIRDER AT PIER NO. 1

DISREGARD PRINTS BEARING EARLIER REVISION DATES

REVISION DATES (PRELIMINARY STAGE) 12/15/97 01/30/98 03/30/98 07/30/98 12/15/98

SHEET 248R1 OF

FILE => I:\bb\04-012001\sas\contract plans and cco\cco\in progress\cco#27\aggdd01.dgn

USERNAME => dlienaus$DATE PLOTTED => 16 MAR 2007 TIME PLOTTED => 07:31:54

100 % PS&E

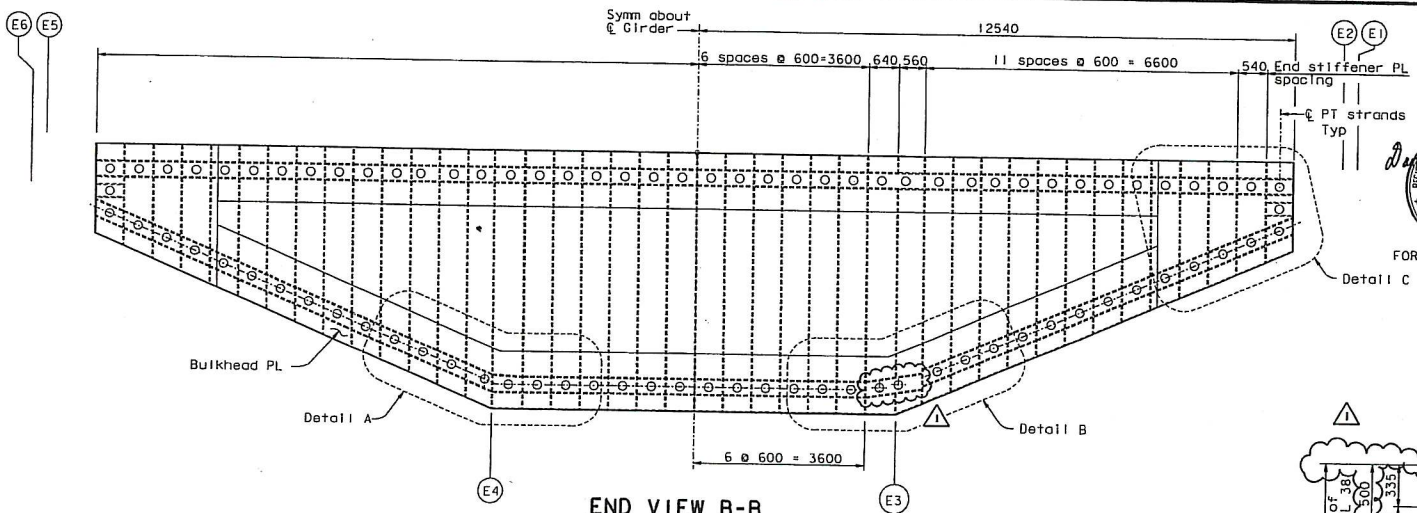

END VIEW B-B
1:50

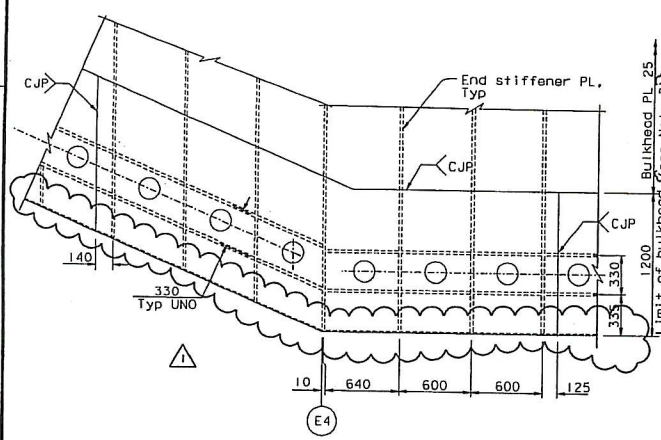

DETAIL A
1:20

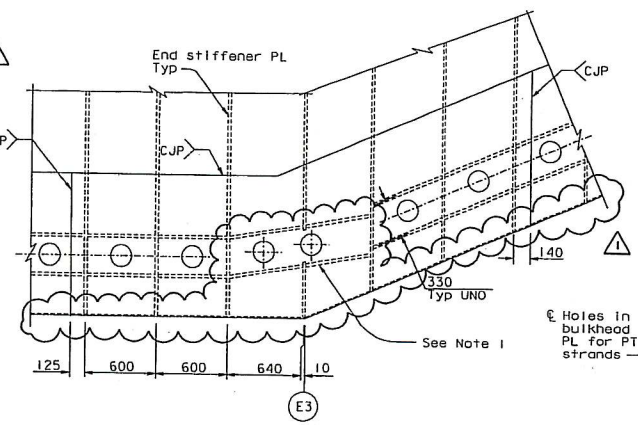

DETAIL B
1:20

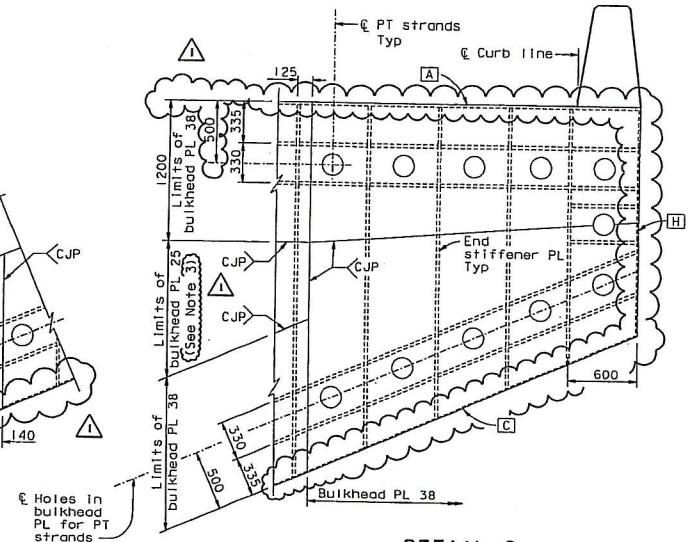

DETAIL C
1:20

NOTES:

1. Top and bottom strands above the E3 and W3 working points shall be placed in openings. For opening details, see Detail E on "Girder At Pier W2 No. 4" sheet.
2. For locations of PT strands, see "W2 Cap Beam Post-Tensioning Details" sheets.
3. At the Contractor's option, PL 38 may be used subject to review and approval of the Engineer.

MARK	DATE	DESCRIPTIONS	BY	CH'D	CCO#
1	02/16/07	BULKHEAD AT GIRDER PIER W2	AS	DT	27

REVISIONS

CONTRACT CHANGE ORDER NO. 27
SHEET 12 OF 18

ALL DIMENSIONS ARE IN MILLIMETERS UNLESS OTHERWISE SHOWN

DIST.	COUNTY	ROUTE	KILOMETER POST TOTAL PROJECT	SHEET NO.	TOTAL SHEETS
04	SF	80	13.2/13.9	666R1	1204

George Baker
REGISTERED ENGINEER - CIVIL
12-6-04
PLANS APPROVAL DATE

REGISTERED PROFESSIONAL ENGINEER George S. Baker No. C57112 Exp. 12/31/05 CIVIL STATE OF CALIFORNIA

The State of California or its officers or agents shall not be responsible for the accuracy or completeness of electronic copies of this plan sheet.

REGISTERED PROFESSIONAL ENGINEER Daniel J. Turner No. C 65033 Exp. 06/30/07 CIVIL STATE OF CALIFORNIA

FOR REVISIONS ONLY

T.Y. LIN / MOFFATT & NICHOL
825 BATTERY STREET
SAN FRANCISCO, CA 94111

Caltrans now has a web site! To get to the web site, go to: http://www.dot.ca.gov

Caltrans Metric

R. Valizadeh/V. Toan/Y.L./W.L./F.C.
DESIGN OVERSIGHT
Y. Liu
SIGN OFF DATE 02/16/07
Rev. Date: 5-15-98

	BY	CHECKED
DESIGN	G. Baker	P. Ritchie
DETAILS	S. Cano	T. McMeans
QUANTITIES	S. Mouch	M. Roberts

ORIGINAL SCALE IN MILLIMETERS FOR REDUCED PLANS 0 1L

PREPARED FOR THE STATE OF CALIFORNIA DEPARTMENT OF TRANSPORTATION

R. Manzanarez
PROJECT ENGINEER

CU 04
EA 0120F1

BRIDGE NO. 34-0006L/R
KILOMETER POST 13.2/13.9

SAN FRANCISCO OAKLAND BAY BRIDGE
EAST SPAN SEISMIC SAFETY PROJECT
SELF-ANCHORED SUSPENSION BRIDGE
(SUPERSTRUCTURE & TOWER)
GIRDER AT PIER W2 NO. 2

DISREGARD PRINTS BEARING EARLIER REVISION DATES
REVISION DATES (PRELIMINARY STAGE)
SHEET 249R1 OF

FILE => I:\bb\04-012001\sas\contract plans and cco\cco\in progress\cco=27\ggddd02.dgn

USERNAME => vignatovsky DATE PLOTTED => 15 MAR 2007 TIME PLOTTED => 15:21:28

100 % PS&E

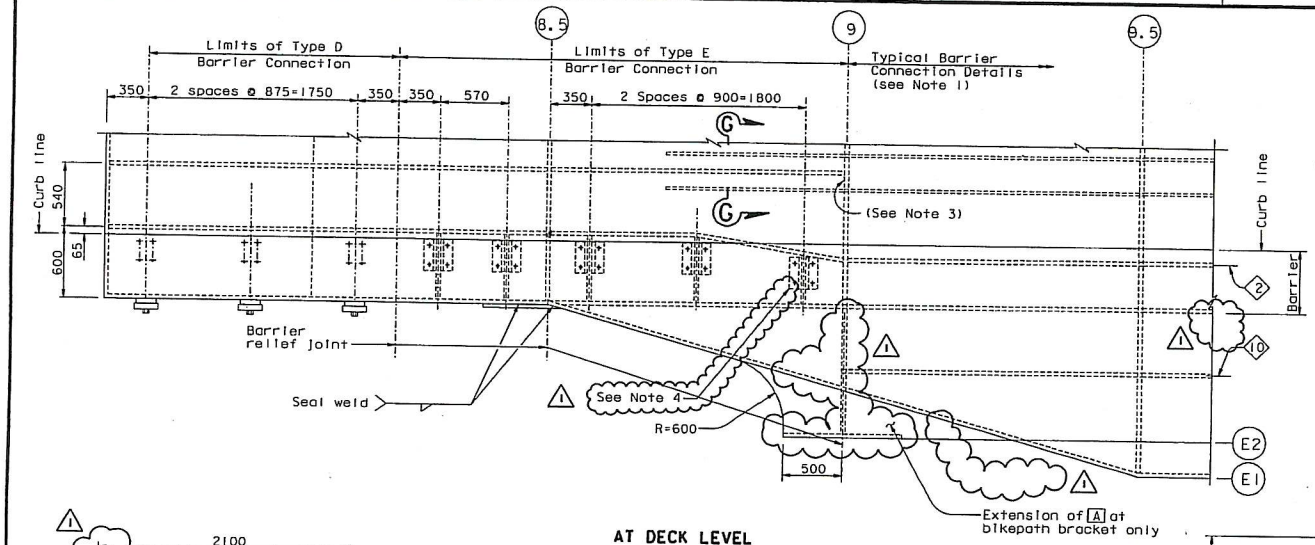

AT DECK LEVEL

DETAIL D (D' Similar at opposite hand)
1:20

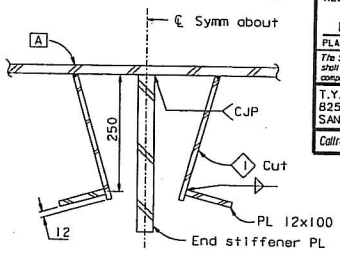

SECTION G-G (See Note 2)
1:5

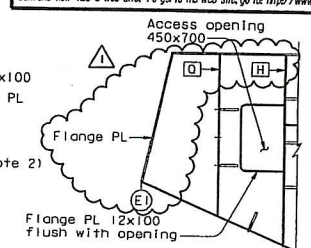

SECTION B-B
1:25

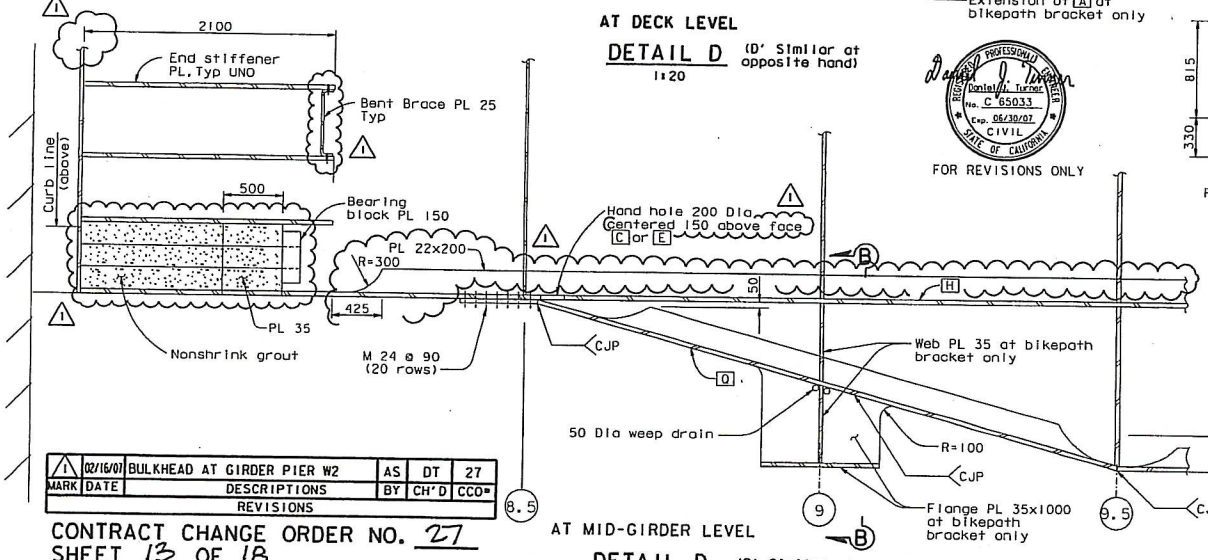

AT MID-GIRDER LEVEL

DETAIL D (D' Similar at opposite hand)
1:20

FOR REVISIONS ONLY

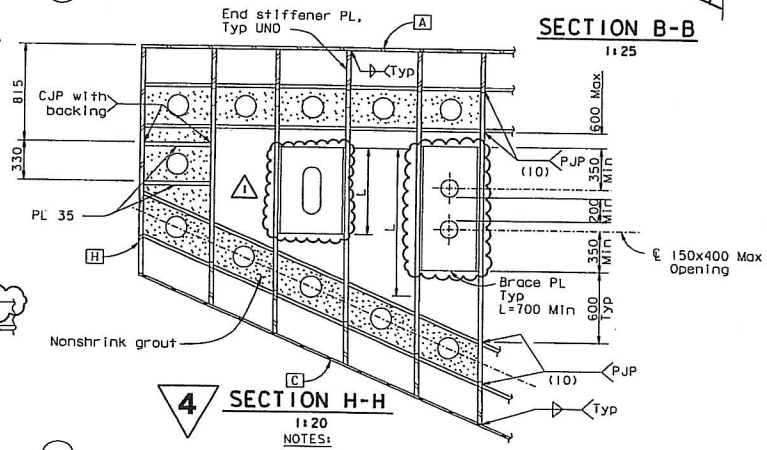

4 SECTION H-H
1:20

NOTES:

1. For typical barrier connection details, see "Typical Girder Details No. 14" sheet. For barrier connection Type D and E, see "Girder At Pier W2 No. 1" sheet.
2. For girder stiff 1 transition details not shown, see "Girder At Pier W2 No. 4" sheet.
3. For all girder stiffeners 1 (Type 2) the gap in the closure plates shall be caulked at PP9.
4. Base plate connection bolts in the barrier shall be adjusted to fit the anchor bolts in this connection.

MARK	DATE	DESCRIPTIONS	BY	CH'D	CCO#
1	02/16/07	BULKHEAD AT GIRDER PIER W2	AS	DT	27

REVISIONS

CONTRACT CHANGE ORDER NO. 27
SHEET 13 OF 18

4 REVISED PER ADDENDUM NO. 4 DATED DECEMBER 9, 2005

ALL DIMENSIONS ARE IN MILLIMETERS UNLESS OTHERWISE SHOWN

DIST.	COUNTY	ROUTE	KILOMETER POST TOTAL PROJECT	SHEET NO.	TOTAL SHEETS
04	SF	80	13.2/13.9	667R1	1204

George Baker
REGISTERED ENGINEER - CIVIL
12-6-04
PLANS APPROVAL DATE

The State of California or its officers or agents shall not be responsible for the accuracy or completeness of electronic copies of this plan sheet.

T.Y. LIN / MOFFATT & NICHOL
825 BATTERY STREET
SAN FRANCISCO, CA 94111

Caltrans now has a web site! To get to the web site, go to: http://www.dot.ca.gov

R. Valizadeh/V. Toan/Y.L./W.L./F.C.
DESIGN OVERSIGHT
SIGN OFF DATE 02/16/07
Rev. Date: 5-18-98

DESIGN	BY G. Baker	CHECKED	P. Ritchie
DETAILS	BY C. Mauch	CHECKED	T. McMeans
QUANTITIES	BY C. Mauch	CHECKED	M. Roberts

ORIGINAL SCALE IN MILLIMETERS FOR REDUCED PLANS

PREPARED FOR THE STATE OF CALIFORNIA DEPARTMENT OF TRANSPORTATION

R. Manzanarez
PROJECT ENGINEER

BRIDGE NO. 34-0006L/R
KILOMETER POST 13.2/13.9

CU 04
EA 0120F1

DISREGARD PRINTS BEARING EARLIER REVISION DATES

SAN FRANCISCO OAKLAND BAY BRIDGE
EAST SPAN SEISMIC SAFETY PROJECT
SELF-ANCHORED SUSPENSION BRIDGE
(SUPERSTRUCTURE & TOWER)

GIRDER AT PIER [illegible] NO. 3

SHEET 250R1

FILE => I:\bb\04-012001\sas\contract plans and cco\cco\in progress\cco#27\aggdd03.dgn

100 % PS&E

USERNAME => olishansky DATE PLOTTED => 16 MAR 2007 TIME PLOTTED => 07:34:39

DIST.	COUNTY	ROUTE	KILOMETER POST TOTAL PROJECT	SHEET NO.	TOTAL SHEETS
04	SF	80	13.2/13.9	668R1	1204

George Baker
REGISTERED ENGINEER - CIVIL
12-6-04
PLANS APPROVAL DATE

REGISTERED PROFESSIONAL ENGINEER George S. Baker No. C 57112 Exp. 12/31/05 CIVIL STATE OF CALIFORNIA

The State of California or its officers or agents shall not be responsible for the accuracy or completeness of electronic copies of this plan sheet.

T.Y. LIN / MOFFATT & NICHOL
825 BATTERY STREET
SAN FRANCISCO, CA 94111

Caltrans now has a web site! To get to the web site, go to: http://www.dot.ca.gov

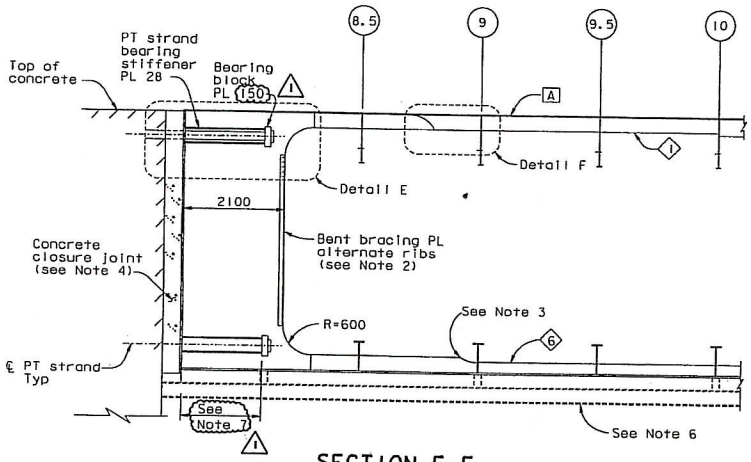

SECTION E-E
1:50

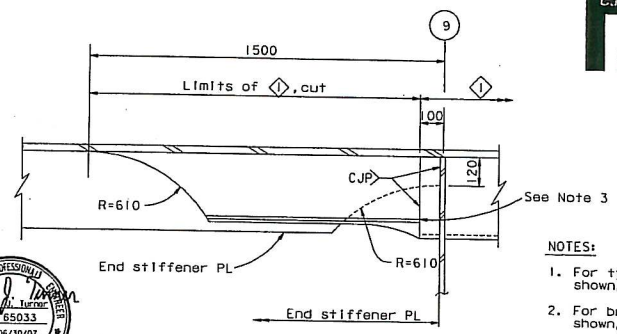

DETAIL F
1:10

REGISTERED PROFESSIONAL ENGINEER Daniel C. Turner No. C 65033 Exp. 06/30/07 CIVIL STATE OF CALIFORNIA

FOR REVISIONS ONLY

MARK	DATE	DESCRIPTIONS	BY	CH'D	CCO#
1	02/16/07	BULKHEAD AT GIRDER PIER W2	GB	DT	27

REVISIONS

CONTRACT CHANGE ORDER NO. 27
SHEET 14 OF 18

NOTES:

1. For typical girder stiffener 1 details not shown, see "Typical Girder Details No. 4" sheet.
2. For bracing details of end stiffener plate not shown, see "Girder At Pier W2 No. 3" sheet.
3. For termination of end stiff plate and stiffeners, see typical details on "Typical Girder Details No. 16" sheet.
4. For concrete closure joint details, see "W2 Cap Beam Reinforcement Details No. (49)" sheet. 1
5. For longitudinal shear PL details not shown, see "Typical Girder Details No. 7" sheet.
6. For location and details of traveler rail, see "Traveler Rail Details" sheets.
7. For Cutout End Stiffener Plate detail, PT standard bearing stiffener PL dimensions and bearing block types, see "Girder At Pier W2 No. 4A" and "Girder At Pier W2 No. 4B" sheets.
8. The Contractor may substitute the PT duct with a 200 Max diameter standard PT pipe, subject to review and approval of the Engineer. The Contractor may also shop drill a 225 Max diameter hole in the Bulkhead PL to extend the PT pipe into the closure pour side of the Bulkhead PL. The interface between the PT pipe and the Bulkhead PL shall be seal welded all around.
9. At the Contractor's option silicone caulking may be used in lieu of seal weld.
10. At the Contractor's option the 10 mm PJP weld may be replaced with a 14 mm fillet weld at locations where there are openings in the End Stiffener PL or Long Shear PL only.

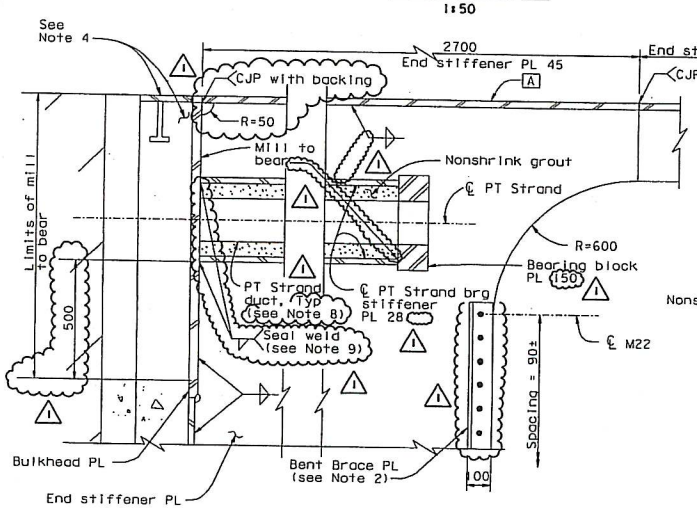

TYPICAL DETAIL AT END STIFFENER PLATE
1

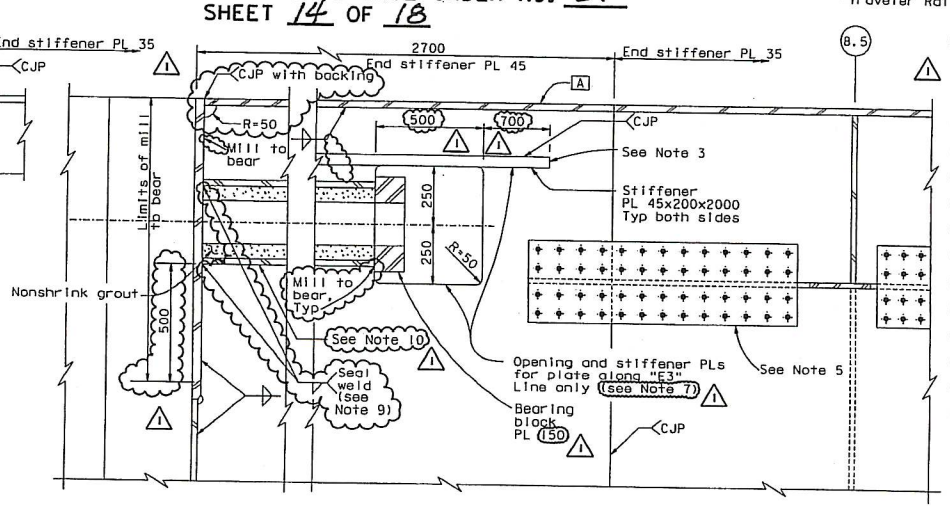

AT LONG SHEAR PLATE ALONG E3 WORKING LINE
(Long shear plate along E4 Working Line similar except as shown)

DETAIL E (See Note 7) 1
1:10

ALL DIMENSIONS ARE IN MILLIMETERS UNLESS OTHERWISE SHOWN

DESIGN	BY G. Baker	CHECKED P. Ritchie	
DETAILS	BY S. Como	CHECKED T. McMeans	
QUANTITIES	BY C. Mouch	CHECKED M. Roberts	

R. Vallizadeh/V. Toan/Y.L./W.L./F.C.
DESIGN OVERSIGHT
Y. Liu
SIGN OFF DATE 02/18/0
Rev. Date: 3-18-98

PREPARED FOR THE STATE OF CALIFORNIA DEPARTMENT OF TRANSPORTATION

R. Manzanarez
PROJECT ENGINEER

BRIDGE NO. 34-0006L/R
KILOMETER POST 13.2/13.9
CU 04
EA 0120F1

ORIGINAL SCALE IN MILLIMETERS FOR REDUCED PLANS 0 10 20 30 40 50 60 70 80 90 100

DISREGARD PRINTS BEARING EARLIER REVISION DATES
REVISION DATES (PRELIMINARY STAGE) 11/07/06 11/07/06 11/07/06 11/07/06 11/07/06 11/07/06

SAN FRANCISCO OAKLAND BAY BRIDGE
EAST SPAN SEISMIC SAFETY PROJECT
SELF-ANCHORED SUSPENSION BRIDGE
(SUPERSTRUCTURE & TOWER)
GIRDER AT PIER NO. 4

SHEET 251R1 OF

FILE => I:\bb\04-012001\sas\contract plans and cco\cco\in progress\cco#27\aggdd04.dgn

100 % PS&E

USERNAME => dilcamos DATE PLOTTED => 16 MAR 2007 TIME PLOTTED => 07:35:44

DIST.	COUNTY	ROUTE	KILOMETER POST TOTAL PROJECT	SHEET NO.	TOTAL SHEETS
04	SF	80	13.2/13.9	668S1	1204

REGISTERED ENGINEER - CIVIL

02-16-07

PLANS APPROVAL DATE

The State of California or its officers or agents shall not be responsible for the accuracy or completeness of electronic copies of this plan sheet.

REGISTERED PROFESSIONAL ENGINEER James P. Duxbury No. C 64677 Exp. 06/30/07 CIVIL STATE OF CALIFORNIA

T.Y. LIN / MOFFATT & NICHOL
825 BATTERY STREET
SAN FRANCISCO, CA 94111

Caltrans now has a web site! To get to the web site, go to: http://www.dot.ca.gov

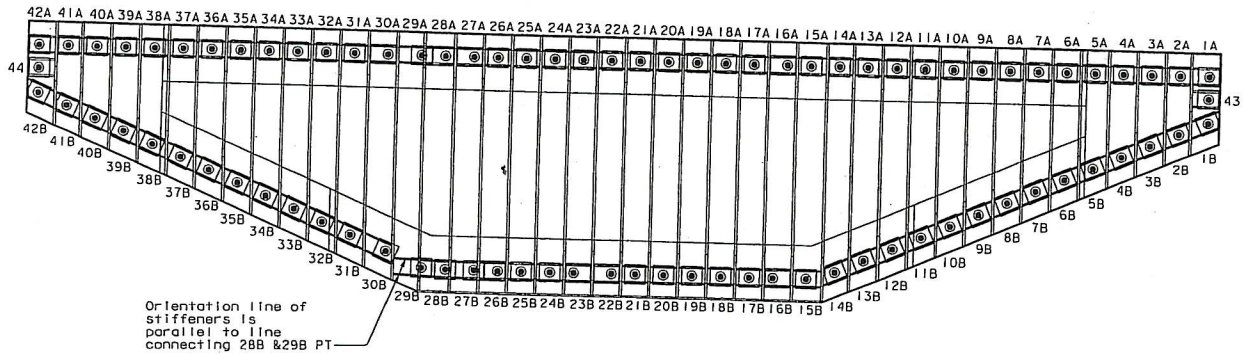

'W' LINE (LOOKING EAST)

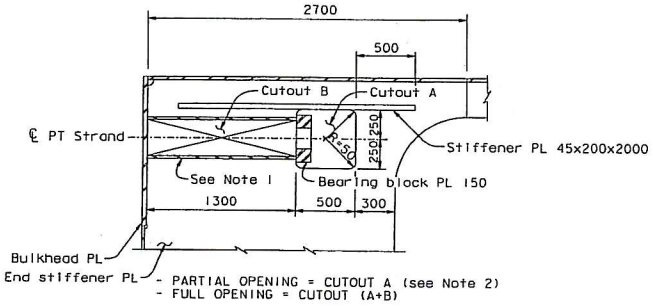

CUTOUT AT END STIFFENER PLATE

1:20

(Nonshrink grout not shown for clarity)

(For details not shown, see Typical Detail at End Stiffener Plate on "Girder At Pier W2 No. 4" sheet.

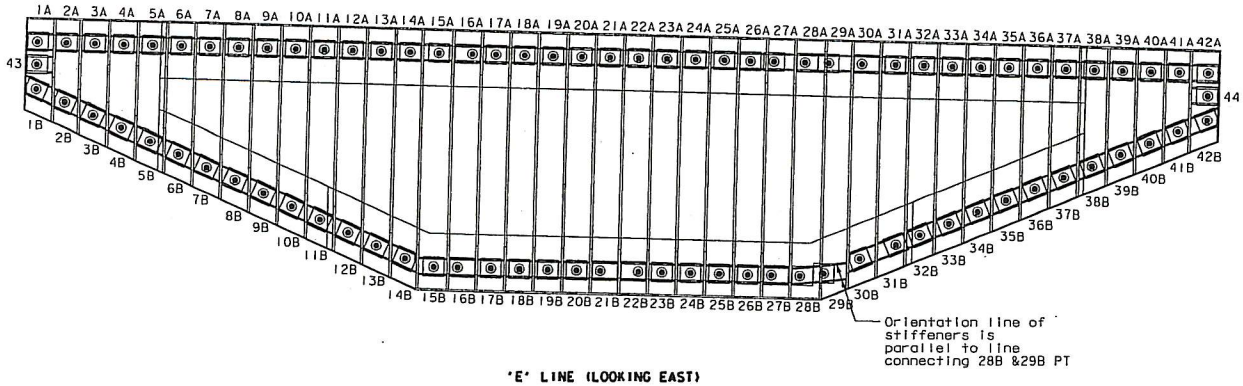

'E' LINE (LOOKING EAST)

BEARING BLOCK PL LAYOUT

1:50

NOTES:

1. At the Contractor's option the 10 mm PJP weld may be replaced with a 14 mm fillet weld at locations where there are openings in the End Stiffener PL or Long Shear PL only.

2. Cutout opening may be enlarged to accomodate bearing block geometry subject to review and approval of the Engineer.

MARK	DATE	DESCRIPTIONS	BY	CH'D	CCO#
0	02/16/07	BULKHEAD AT GIRDER PIER W2	JD	GB	27

REVISIONS

CONTRACT CHANGE ORDER NO. 27
SHEET 15 OF 18

100 % PSAE

ALL DIMENSIONS ARE IN MILLIMETERS UNLESS OTHERWISE SHOWN

R. Vaziazadeh/V. Toan/Y.L./N.L./F.C.
DESIGN OVERSIGHT
Y. Liu
SIGN OFF DATE 02/16/0
Rev. Date: 5-15-98

DESIGN	BY J. Duxbury	CHECKED G. Baker	
DETAILS	BY A. Sanjines	CHECKED M. Nader	
QUANTITIES	BY J. Duxbury	CHECKED A. Sanjines	

ORIGINAL SCALE IN MILLIMETERS FOR REDUCED PLANS 0 10 20 30 40 50 60 70 80 90 100

PREPARED FOR THE STATE OF CALIFORNIA DEPARTMENT OF TRANSPORTATION

R. Manzanarez
PROJECT ENGINEER

CU 04
EA 0120F1

BRIDGE NO. 34-0006L/R
KILOMETER POST 13.2/13.9

DISREGARD PRINTS BEARING EARLIER REVISION DATES → 02/16/07

REVISION DATES (PRELIMINARY STAGE)

SAN FRANCISCO OAKLAND BAY BRIDGE
EAST SPAN SEISMIC SAFETY PROJECT
SELF-ANCHORED SUSPENSION BRIDGE
(SUPERSTRUCTURE & TOWER)

GIRDER AT PIER W2 NO. 4A

SHEET 251S1 OF

FILE => I:\bb\04-0120f1\sas\contract plans and cco\cco\in progress\cco=27\sup cco=27\oggdd04s.dgn

USERNAME => ptom DATE PLOTTED => 10 MAY 2007 TIME PLOTTED => 15:01:13

DIST.	COUNTY	ROUTE	KILOMETER POST TOTAL PROJECT	SHEET NO.	TOTAL SHEETS
04	SF	80	13.2/13.9	66852	1204

REGISTERED ENGINEER - CIVIL

02-16-07

PLANS APPROVAL DATE

REGISTERED PROFESSIONAL ENGINEER James P. Duxbury No. C 64677 Exp. 06/30/07 CIVIL STATE OF CALIFORNIA

The State of California or its officers or agents shall not be responsible for the accuracy or completeness of electronic copies of this plan sheet.

T.Y. LIN / MOFFATT & NICHOL
825 BATTERY STREET
SAN FRANCISCO, CA 94111

Caltrans now has a web site! To get to the web site, go to: http://www.dot.ca.gov

Bearing Block Table

WESTBOUND							
PT	Bearing Block	Opening	PT Strand Brg Stiff PL	PT	Bearing Block	Opening	PT Strand Brg Stiff PL
1A	B	None	28x1682	1B	E	None	28x1682
2A	B	None	28x1682	2B	D	None	28x1682
3A	Standard	None	28x1682	3B	C	None	28x1682
4A	Standard	None	28x1682	4B	C	None	28x1682
5A	Standard	None	28x1682	5B	C	None	28x1682
6A	Standard	None	28x1682	6B	C	None	28x1682
7A	Standard	None	28x1682	7B	C	None	28x1682
8A	Standard	None	28x1682	8B	C	None	28x1682
9A	Standard	None	28x1682	9B	C	None	28x1682
10A	Standard	None	28x1682	10B	C	None	28x1682
11A	Standard	None	28x1682	11B	C	None	28x1682
12A	Standard	None	28x1682	12B	C	None	28x1682
13A	Standard	None	28x1682	13B	C	None	28x1682
14A	Standard	None	28x1682	14B	D	None	28x1682
15A	Standard	None	28x1682	15B	Standard	None	28x1682
16A	A	None	28x1682	16B	A	None	28x1682
17A	Standard	None	28x1682	17B	Standard	None	28x1682
18A	Standard	None	28x1682	18B	Standard	None	28x1682
19A	Standard	None	28x1682	19B	Standard	None	28x1682
20A	Standard	None	28x1682	20B	Standard	None	28x1682
21A	Standard	None	28x1682	21B	Standard	None	28x1682
22A	Standard	None	28x1682	22B	A	None	28x1682
23A	Standard	None	28x1682	23B	A	None	28x1682
24A	Standard	None	28x1682	24B	Standard	None	28x1682
25A	Standard	None	28x1682	25B	Standard	None	28x1682
26A	Standard	None	28x1682	26B	A	None	28x1300
27A	A	None	28x1682	27B	Standard	Full Opening	28x1300
28A	A	None	28x1300	28B	Standard	Full Opening	28x1300
29A	Standard	Full Opening	28x1300	29B	Standard	Full Opening	28x1300
30A	A	None	28x1682	30B	Standard	Partial Opening	28x1300
31A	Standard	None	28x1682	31B	C	None	28x1682
32A	Standard	None	28x1682	32B	C	None	28x1682
33A	Standard	None	28x1682	33B	C	None	28x1682
34A	Standard	None	28x1682	34B	C	None	28x1682
35A	Standard	None	28x1682	35B	C	None	28x1682
36A	Standard	None	28x1682	36B	C	None	28x1682
37A	Standard	None	28x1682	37B	C	None	28x1682
38A	Standard	None	28x1682	38B	C	None	28x1682
39A	Standard	None	28x1682	39B	C	None	28x1682
40A	Standard	None	28x1682	40B	C	None	28x1682
41A	B	None	28x1682	41B	D	None	28x1682
42A	B	None	28x1682	42B	E	None	28x1682
43	B	None	35x500				
44	B	None	35x500				

EASTBOUND							
PT	Bearing Block	Opening	PT Strand Brg Stiff PL	PT	Bearing Block	Opening	PT Strand Brg Stiff PL
1A	B	None	28x1682	1B	E	None	28x1682
2A	B	None	28x1682	2B	D	None	28x1682
3A	Standard	None	28x1682	3B	C	None	28x1682
4A	Standard	None	28x1682	4B	C	None	28x1682
5A	Standard	None	28x1682	5B	C	None	28x1682
6A	Standard	None	28x1682	6B	C	None	28x1682
7A	Standard	None	28x1682	7B	C	None	28x1682
8A	Standard	None	28x1682	8B	C	None	28x1682
9A	Standard	None	28x1682	9B	C	None	28x1682
10A	Standard	None	28x1682	10B	C	None	28x1682
11A	Standard	None	28x1682	11B	C	None	28x1682
12A	Standard	None	28x1682	12B	C	None	28x1682
13A	Standard	None	28x1682	13B	C	None	28x1682
14A	Standard	None	28x1682	14B	D	None	28x1682
15A	Standard	None	28x1682	15B	Standard	None	28x1682
16A	A	None	28x1682	16B	A	None	28x1682
17A	Standard	None	28x1682	17B	Standard	None	28x1682
18A	Standard	None	28x1682	18B	Standard	None	28x1682
19A	Standard	None	28x1682	19B	Standard	None	28x1682
20A	Standard	None	28x1682	20B	Standard	None	28x1682
21A	Standard	None	28x1682	21B	A	None	28x1682
22A	Standard	None	28x1682	22B	A	None	28x1682
23A	Standard	None	28x1682	23B	Standard	None	28x1682
24A	Standard	None	28x1682	24B	Standard	None	28x1682
25A	Standard	None	28x1682	25B	Standard	None	28x1682
26A	Standard	None	28x1300	26B	Standard	None	28x1682
27A	Standard	Partial Opening	28x1300	27B	A	None	28x1682
28A	A	None	28x1300	28B	A	None	28x1300
29A	Standard	Full Opening	28x1300	29B	Standard	Full Opening	28x1300
30A	A	None	28x1682	30B	E	None	28x1682
31A	Standard	None	28x1682	31B	Standard	Partial Opening	28x1300
32A	Standard	None	28x1682	32B	C	None	28x1300
33A	Standard	None	28x1682	33B	C	None	28x1682
34A	Standard	None	28x1682	34B	C	None	28x1682
35A	Standard	None	28x1682	35B	C	None	28x1682
36A	Standard	None	28x1682	36B	C	None	28x1682
37A	Standard	None	28x1682	37B	C	None	28x1682
38A	Standard	None	28x1682	38B	C	None	28x1682
39A	Standard	None	28x1682	39B	C	None	28x1682
40A	Standard	None	28x1682	40B	C	None	28x1682
41A	B	None	28x1682	41B	D	None	28x1682
42A	B	None	28x1682	42B	E	None	28x1682
43	B	None	35x500				
44	B	None	35x500				

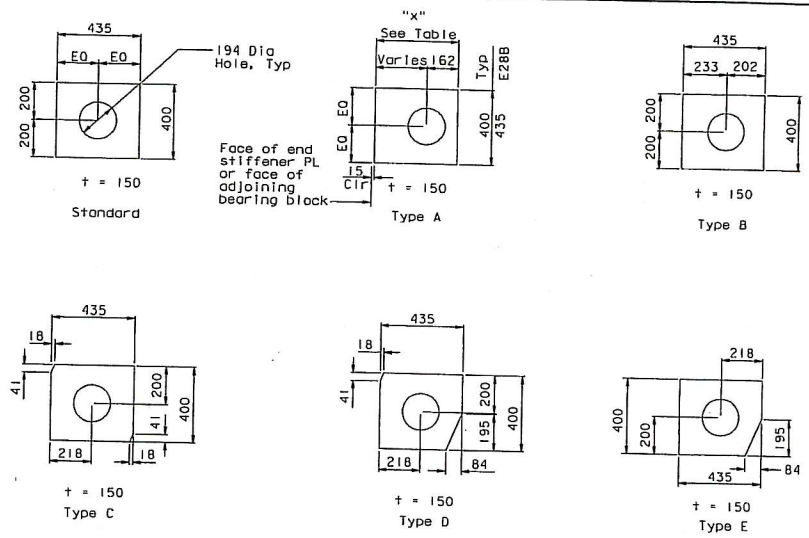

BEARING BLOCK TYPES

Bearing Block Type A Table

WESTBOUND					
PT	Bearing Block	x	PT	Bearing Block	x
16A	A	525	16B	A	525
27A	A	525	22B	A	525
28A	A	435	23B	A	525
30A	A	525	26B	A	435

EASTBOUND					
PT	Bearing Block	x	PT	Bearing Block	x
16A	A	525	16B	A	525
28A	A	435	21B	A	525
30A	A	525	22B	A	525
			27B	A	525
			28B*	A	435

*Note: Bearing Block 28B shall be 435x435

MARK	DATE	DESCRIPTIONS	BY	CH'D	CCO#
0	02/16/07	BULKHEAD AT GIRDER PIER W2	JD	GB	27

REVISIONS

CONTRACT CHANGE ORDER NO. 27
SHEET 16 OF 18

100 % PS&E

TIME PLOTTED => 15:02:03 DATE PLOTTED => 10 MAY 2007 USERNAME => ptran

ALL DIMENSIONS ARE IN MILLIMETERS UNLESS OTHERWISE SHOWN

R. Valizadeh/V. Toan/Y.L./W.L./F.C.
DESIGN OVERSIGHT
Y. Liu
SIGN OFF DATE 02/16/0
Rev. Date: 5-18-98

DESIGN	BY J. Duxbury	CHECKED G. Baker	
DETAILS	BY A. Sanjines	CHECKED M. Nader	
QUANTITIES	BY J. Duxbury	CHECKED A. Sanjines	

ORIGINAL SCALE IN MILLIMETERS FOR REDUCED PLANS 0 10 20 30 40 50 60 70 80 90 100

PREPARED FOR THE STATE OF CALIFORNIA DEPARTMENT OF TRANSPORTATION

R. Manzanarez
PROJECT ENGINEER

CU 04
EA 0120F1

BRIDGE NO. 34-0006L/R
KILOMETER POST 13.2/13.9

DISREGARD PRINTS BEARING EARLIER REVISION DATES

SAN FRANCISCO OAKLAND BAY BRIDGE
EAST SPAN SEISMIC SAFETY PROJECT
SELF-ANCHORED SUSPENSION BRIDGE
(SUPERSTRUCTURE & TOWER)

GIRDER AT PIER W2 0.4B

REVISION DATES (PRELIMINARY STAGE) 02/16/07

SHEET 251S2 OF

FILE => I:\bb\04-012001\sas\contract plans and cco\cco\in progress\cco#27\sup cco#27\oggdd04s2.dgn

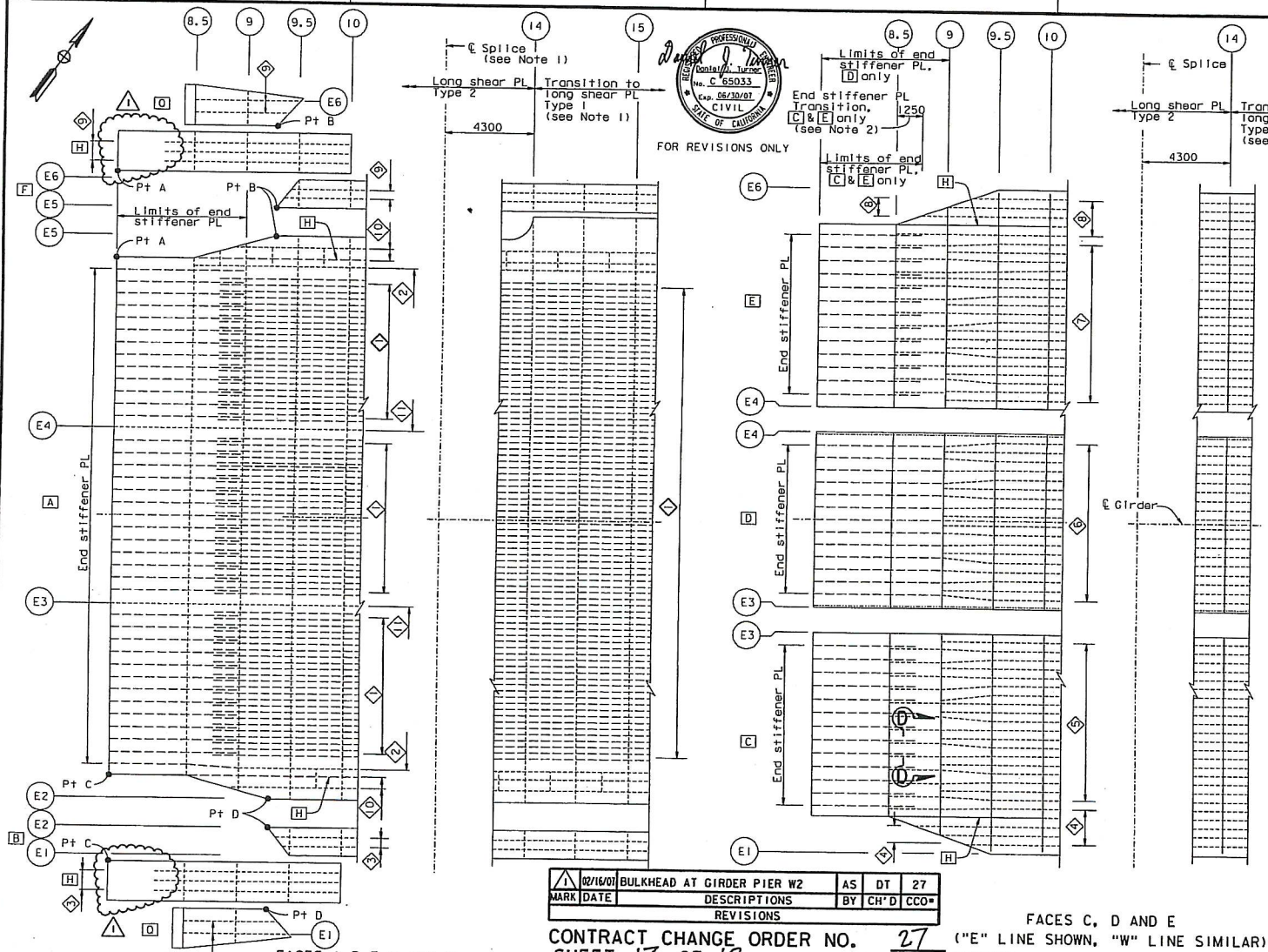

FOR REVISIONS ONLY

FACES A, B, F, H AND Q
("E" LINE SHOWN, "W" LINE SIMILAR)
TOP GIRDER FACE LAYOUT
1:100

FACES C, D AND E
("E" LINE SHOWN, "W" LINE SIMILAR)
BOTTOM GIRDER FACE LAYOUT
1:100

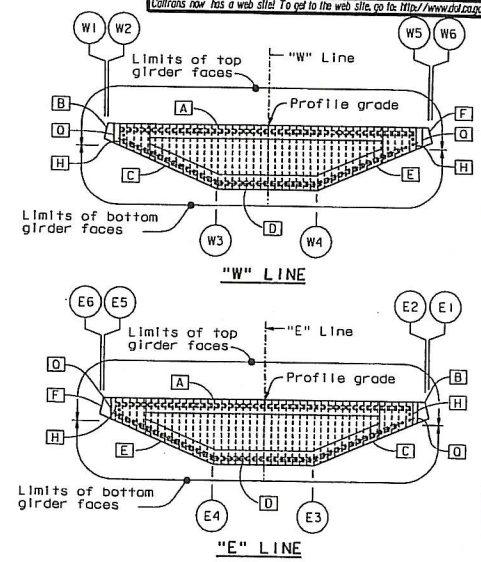

KEY CROSS SECTIONS
1:200

LEGEND:

- D — Girder face designation D
- -------- Stiffener type 4, 5, 6, 7 or 8
- — — — Longitudinal stiffener Type 1 leg or End stiffener PL
- ·····— Longitudinal stiffener Type 1 or 2
- ◇4 — Stiffener Type 4 designation

NOTES:

1. For longitudinal shear plate transition details, see "Typical Girder Details No. 7" sheet.
2. For Section D-D end stiffener plate transition details for C and E, see "Girder At Pier W2 No. 6" sheet.

MARK	DATE	DESCRIPTIONS	BY	CH'D	CCO#
1	02/16/07	BULKHEAD AT GIRDER PIER W2	AS	DT	27

REVISIONS

CONTRACT CHANGE ORDER NO. 27
SHEET 17 OF 18

ALL DIMENSIONS ARE IN MILLIMETERS UNLESS OTHERWISE SHOWN

DIST.	COUNTY	ROUTE	KILOMETER POST TOTAL PROJECT	SHEET NO.	TOTAL SHEETS
04	SF	80	13.2/13.9	669R1	1204

George Baker
REGISTERED ENGINEER - CIVIL
12-6-04
PLANS APPROVAL DATE

The State of California or its officers or agents shall not be responsible for the accuracy or completeness of electronic copies of this plan sheet.

T.Y. LIN / MOFFATT & NICHOL
825 BATTERY STREET
SAN FRANCISCO, CA 94111

Caltrans now has a web site! To get to the web site, go to: http://www.dot.ca.gov

R. Valizadeh/V. Toan/Y.L./W.L./F.C.
DESIGN OVERSIGHT
SIGN OFF DATE 02/16/07
Rev. Date: 5-15-95

DESIGN	BY G. Baker	CHECKED	P. Ritchie
DETAILS	BY M. Gulyas	CHECKED	T. McMeans
QUANTITIES	BY C. Mauch	CHECKED	M. Roberts

ORIGINAL SCALE IN MILLIMETERS FOR REDUCED PLANS 0 10 20 30 40 50 60 70 80 90 100

PREPARED FOR THE STATE OF CALIFORNIA DEPARTMENT OF TRANSPORTATION

R. Manzanarez
PROJECT ENGINEER

BRIDGE NO. 34-0006L/R
KILOMETER POST 13.2/13.9

CU 04
EA 0120F1

SAN FRANCISCO OAKLAND BAY BRIDGE
EAST SPAN SEISMIC SAFETY PROJECT
SELF-ANCHORED SUSPENSION BRIDGE
(SUPERSTRUCTURE & TOWER)

GIRDER AT PIER NO. 5

DISREGARD PRINTS BEARING EARLIER REVISION DATES
REVISION DATES (PRELIMINARY STAGE)
SHEET 252R1 OF

FILE => I:\bb\04-012001\sas\contract plans and cco\cco\in progress\cco#27\aggdd05.dgn

100 % PS&E

USERNAME => altshansk DATE PLOTTED => 16 MAR 2007 TIME PLOTTED => 07:39:34

DIST.	COUNTY	ROUTE	KILOMETER POST TOTAL PROJECT	SHEET NO.	TOTAL SHEETS
04	SF	80	13.2/13.9	670R1	1204

Caltrans Metric

George Baker
REGISTERED ENGINEER - CIVIL

12-6-04
PLANS APPROVAL DATE

The State of California or its officers or agents shall not be responsible for the accuracy or completeness of electronic copies of this plan sheet.

REGISTERED PROFESSIONAL ENGINEER George S. Baker No. C 57112 Exp. 12/31/05 CIVIL STATE OF CALIFORNIA

T.Y. LIN / MOFFATT & NICHOL
825 BATTERY STREET
SAN FRANCISCO, CA 94111

Caltrans now has a web site! To get to the web site, go to: http://www.dot.ca.gov

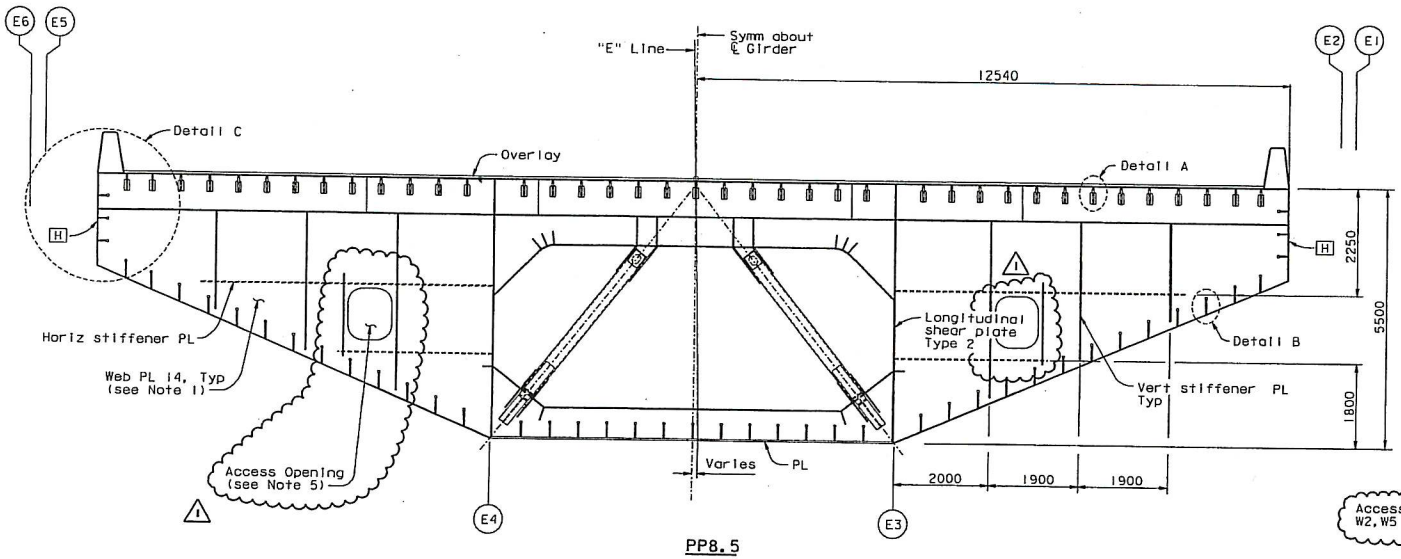

PP8.5

SECTION AT FLOORBEAM

1:50

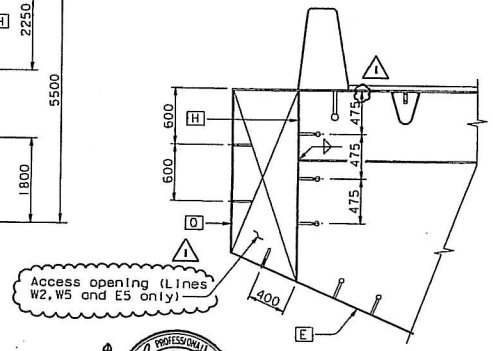

AT PP9

DETAIL C

1:25

REGISTERED PROFESSIONAL ENGINEER Daniel J. Turner No. C 65033 Exp. 06/30/07 CIVIL STATE OF CALIFORNIA

FOR REVISIONS ONLY

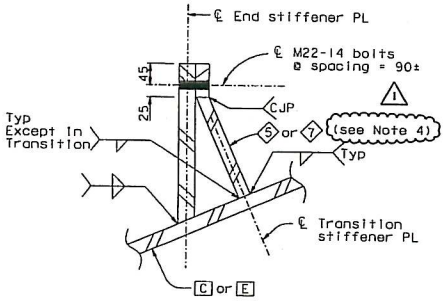

SECTION D-D

END STIFFENER TRANSITION DETAIL

1:5

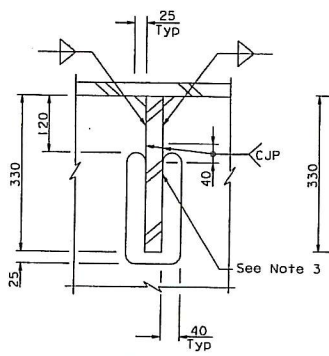

DETAIL A

1:5

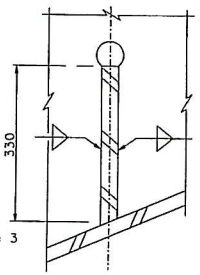

DETAIL B

1:5

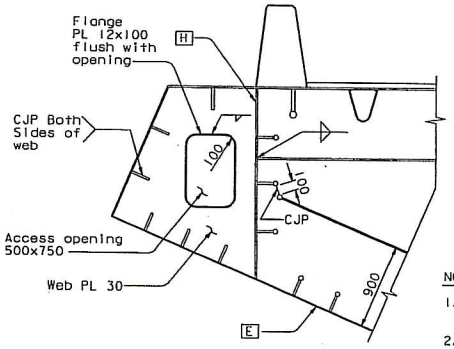

AT PP9.5, PP10

DETAIL C

1:25

MARK	DATE	DESCRIPTIONS	BY	CH'D	CCO#
1	02/16/07	BULKHEAD AT GIRDER PIER W2	AS	DT	27

REVISIONS

CONTRACT CHANGE ORDER NO. 27
SHEET 18 OF 18

NOTES:

1. For web PL sizes at chevron braces, see "Typical Floorbeam Details No. 2" sheet.
2. For details not shown, see "Typical Floorbeam Details" sheets.
3. Grind off end of CJP welds. Provide 12 mm trailer with transition to cut-out. See similar detail A on "Typical Girder Details No. 4" sheet. Grind opening to 6 micron finish in accordance with ANSI B46.1.
4. Stiffeners 5 and 7 may be terminated without transition taper at 50 mm east of PP8.5.
5. For Access Opening details, see "Typical Floorbeam Details No. 1" sheet.

ALL DIMENSIONS ARE IN MILLIMETERS UNLESS OTHERWISE SHOWN

R. Valizadeh/V. Toan/Y.L./W.L./F.C.
DESIGN OVERSIGHT
SIGN OFF DATE 02/10/07
Rev. Date: 5-18-98

	BY	CHECKED
DESIGN	G. Baker	P. Ritchie
DETAILS	S. Como	T. McMeans
QUANTITIES	C. Mauch	M. Roberts

ORIGINAL SCALE IN MILLIMETERS FOR REDUCED PLANS 0 10 20 30 40 50 60 70 80 90 100

PREPARED FOR THE STATE OF CALIFORNIA DEPARTMENT OF TRANSPORTATION

R. Manzanarez
PROJECT ENGINEER

BRIDGE NO. 34-0006L/R
KILOMETER POST 13.2/13.9

CU 04
EA 0120F1

DISREGARD PRINTS BEARING EARLIER REVISION DATES

REVISION DATES (PRELIMINARY STAGE)

SAN FRANCISCO OAKLAND BAY BRIDGE
EAST SPAN SEISMIC SAFETY PROJECT
SELF-ANCHORED SUSPENSION BRIDGE
(SUPERSTRUCTURE & TOWER)

GIRDER AT PIER NO. 6

SHEET 253R1 OF

FILE => I:\bb\04-012001\sas\contract plans and cco\cco\in progress\cco#27\oggdd05a.dgn

USERNAME => allshansky DATE PLOTTED => 16 MAR 2007 TIME PLOTTED => 07:40:44

100 % PS&E