DIST.	COUNTY	ROUTE	KILOMETER POST TOTAL PROJECT	SHEET NO.	TOTAL SHEETS
04	SF	80	13.2/13.9	875R1	1204

REGISTERED ENGINEER - CIVIL

12-6-04
PLANS APPROVAL DATE

REGISTERED PROFESSIONAL ENGINEER Marwan N. Nader No. C 054426 Exp. 12/31/07 CIVIL STATE OF CALIFORNIA

The State of California or its officers or agents shall not be responsible for the accuracy or completeness of electronic copies of this plan sheet.

T.Y. LIN / MOFFATT & NICHOL
825 BATTERY STREET
SAN FRANCISCO, CA 94111

Caltrans now has a web site! To get to the web site, go to: http://www.dot.ca.gov

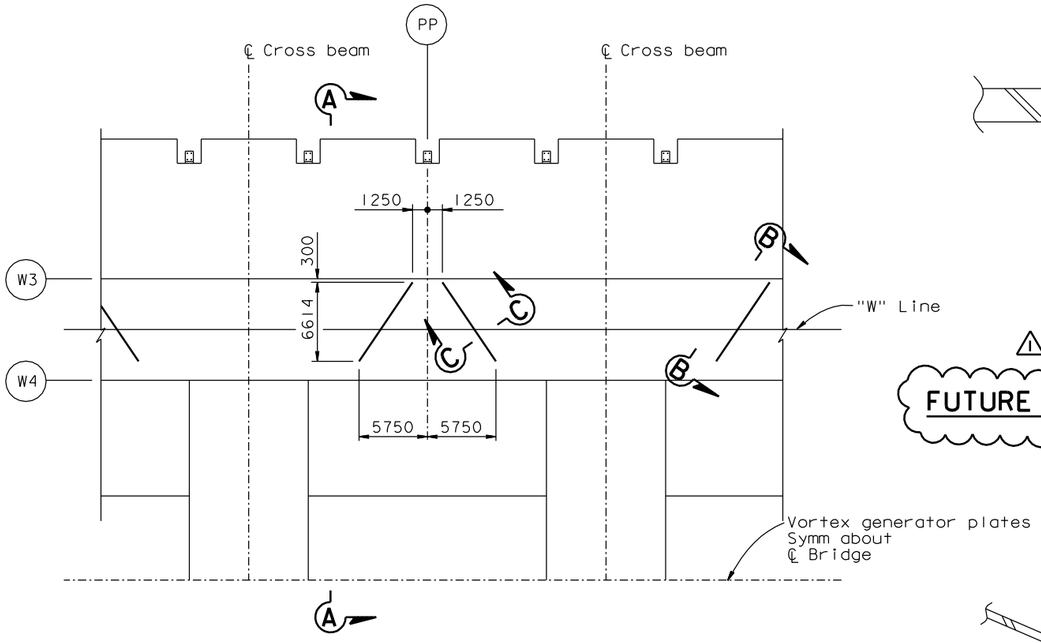

DETAIL A
TYPICAL LAYOUT OF VORTEX GENERATOR PLATES
1:250
("W" Line shown, "E" Line similar)

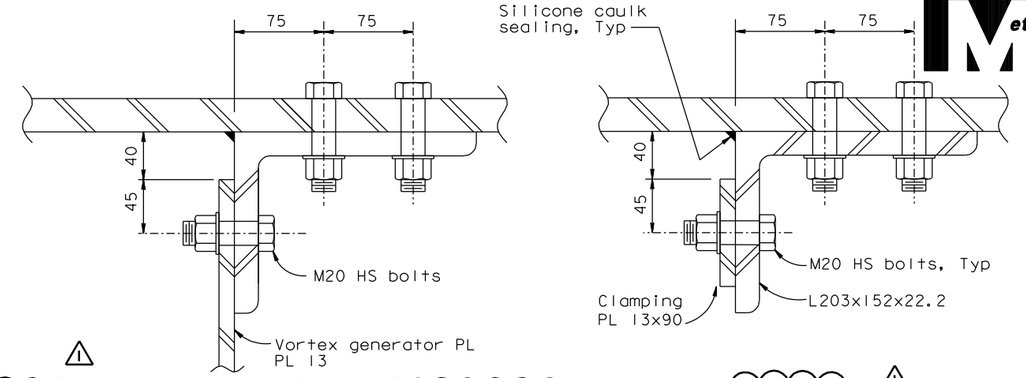

1

FUTURE WIND VORTEX GENERATOR PLATE
(Installed by others)

1

AS BUILT

SECTION C-C
1:2.5

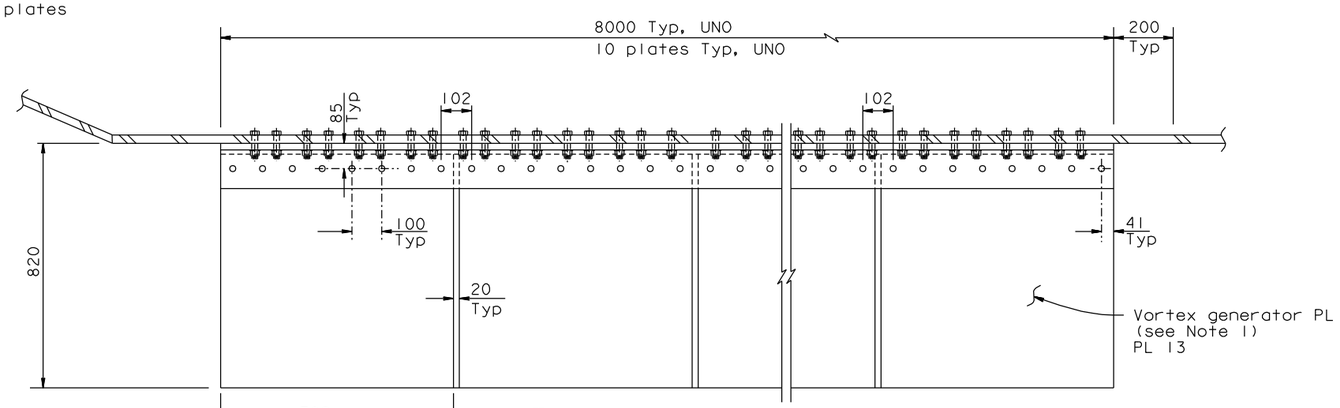

WIND VORTEX GENERATOR PLATES
VIEW B-B
1:10

1

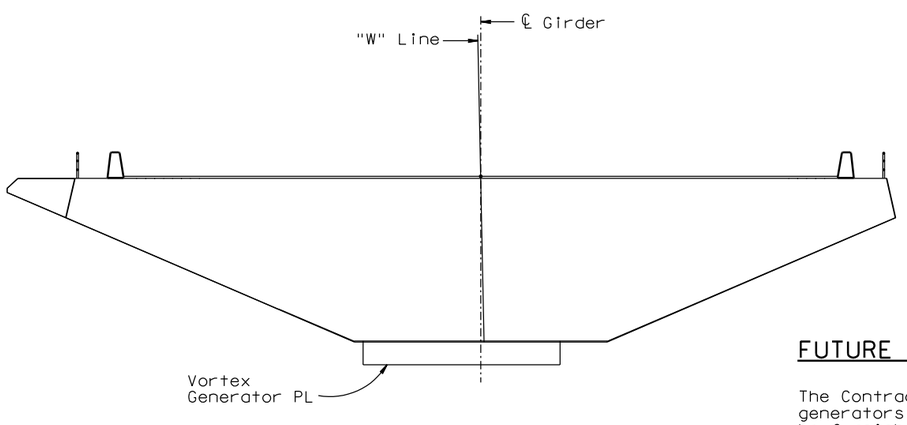

SECTION A-A
1:100

MARK	DATE	DESCRIPTIONS	BY	CH'D	CCO#
1	07/06/07	WIND VORTEX GENERATOR PLATES	CC	MN	26

REVISIONS

CONTRACT CHANGE ORDER NO. _____
SHEET ____ OF ____

NOTES:

1. A total of 720 vortex generator plates shall be fabricated and delivered as directed by the Engineer.
2. H20 HS bolts connecting L203x152x22.2 and box girder plate shall clear box girder stiffeners.

FUTURE INSTALLATION OF WIND VORTEX GENERATOR PLATES

1 1

The Contractor shall install angles, clamping plates and HS bolts for the vortex generators as shown in Section C-C "As-Built". 720 vortex generator plates shall be furnished and delivered to Caltrans for storage. Future installation of wind vortex generator plates shall require the removal and disposal of as-built M20 HS bolts, to the clamping PL, removal and disposal of as-built clamping PL, 1 installation of vortex generator plates, installation of new M20 HS bolts, and painting of steel plates and HS bolts.

ALL DIMENSIONS ARE IN MILLIMETERS UNLESS OTHERWISE SHOWN

SAN FRANCISCO OAKLAND BAY BRIDGE
EAST SPAN SEISMIC SAFETY PROJECT
SELF-ANCHORED SUSPENSION BRIDGE
(SUPERSTRUCTURE & TOWER)

WIND VORTEX GENERATOR PLATES DETAILS

R. Valizadeh/V. Toan/Y.L./W.L./F.C.
DESIGN OVERSIGHT
Roya Valizadeh / Vong P. Toan / Y. Liu
SIGN OFF DATE 07/06/07

	BY	CHECKED
DESIGN	M. Nader	C. Seim
DETAILS	G. Baker	J. Lopez-Jara
QUANTITIES	C. Mibelli	J. Lopez-Jara

PREPARED FOR THE STATE OF CALIFORNIA DEPARTMENT OF TRANSPORTATION

R. Manzanarez
PROJECT ENGINEER

BRIDGE NO. 34-0006L/R
KILOMETER POST 13.2/13.9

CU 04
EA 0120F1

DISREGARD PRINTS BEARING EARLIER REVISION DATES 04/08/02 07/01/02 12/19/02

SHEET 458R1 OF

Rev. Date: 5-18-98

ORIGINAL SCALE IN MILLIMETERS FOR REDUCED PLANS 0 10 20 30 40 50 60 70 80 90 100

FILE => I:\bb\04-0120I\sas\contract plans and cco\cco\in progress\cco#26\akwvg03.dgn

100 % PS&E

USERNAME => vignatovsky DATE PLOTTED => 02 JUL 2007 TIME PLOTTED => 07:01:23