DIST.	COUNTY	ROUTE	KILOMETER POST TOTAL PROJECT	SHEET NO.	TOTAL SHEETS
04	SF	80	13.2/13.9	893R3	1204

REGISTERED ENGINEER - CIVIL

12-6-04
PLANS APPROVAL DATE

REGISTERED PROFESSIONAL ENGINEER Tien Hung Ho No. C 43990 Exp. 06/30/11 CIVIL STATE OF CALIFORNIA

The State of California or its officers or agents shall not be responsible for the accuracy or completeness of electronic copies of this plan sheet.

T.Y. LIN / MOFFATT & NICHOL
825 BATTERY STREET
SAN FRANCISCO, CA 94111

Caltrans now has a web site! To get to the web site, go to: http://www.dot.ca.gov

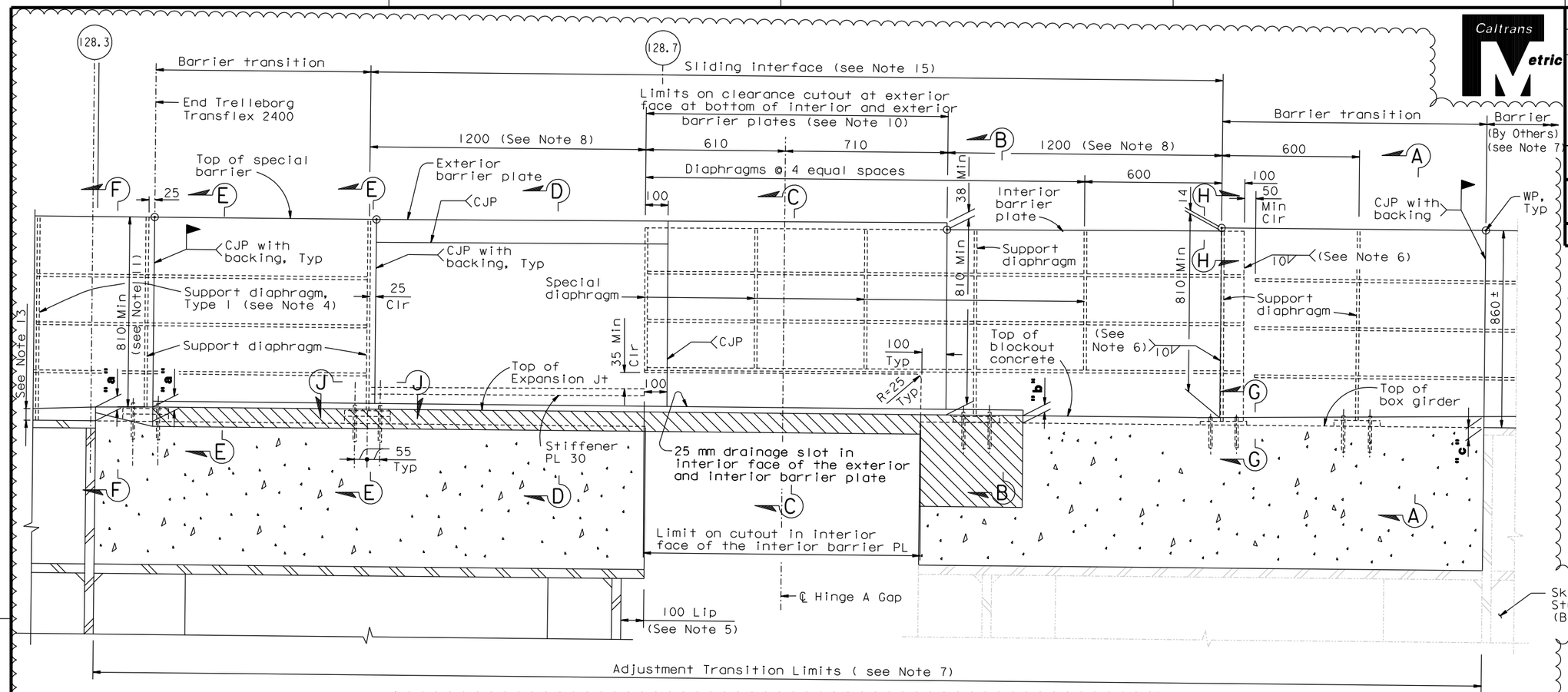

SAS

BARRIER AT HINGE A - NORTH SIDE

("E" Line Shown, "W" Line Similar)
1:10

SKYWAY

PP		PROPOSED OVERLAY THICKNESS						JOINT CROSS SLOPE (See Note 14)	
		E Line			W Line			E Line	W Line
		"a"	"b"	"c"	"a"	"b"	"c"		
		mm (See Note 9)			mm (See Note 9)			%	%
Exp Jt Blockout	N	67	38	42	57	47	43	3.186	3.102
	S	25	57	50	32	50	50		

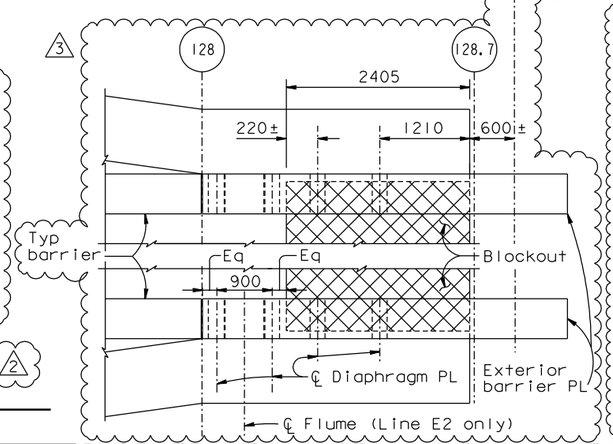

BARRIER AT HINGE A - PLAN VIEW

1:40

NOTES:

1. For details not shown, see "Barrier Details No.1" sheet.
2. For Standard diaphragm details, see Section C-C of "Barrier Details No.1" sheet.
3. For Sections A-A, B-B, C-C, D-D, F-F and G-G, see "Barrier Details No.6" sheet. For Sections E-E, H-H, J-J and Alt Section D-D, see "Barrier Details No.6A" sheet.
4. For support diaphragm Type I details not shown, see similar Section C-C on "Barrier Details No.1" sheet. For exterior barrier dimensions, see Section C-C on "Barrier Details No.1" sheet.
5. Barrier on the SAS side shall be trimmed by an amount equal to the amount of field trimming done at the lip.
6. For weld limits, see Section H-H on "Barrier Details 6A" sheet.
7. Field verify the as-built condition and dimensions before fabricating SAS barrier.
8. Values are for mean temperature of 20°C.
9. Tabulated overlay thickness is projected thickness at barrier based on Lowered Skyway Survey by ABF dated December 2009 and SAS cross slope of 3%. The contractor shall survey SAS and Skyway deck surfaces after installing Hinge A pipe beams. Based on this survey and the following criteria, the overlay thickness shall be calculated and submitted for approval.
   - Min overlay thickness = 25 mm
   - Max overlay thickness = 90 mm
   - Rate of change of cross slope = 0.2% / m
10. Cope barrier PL to clear PL 20x185, see Section C-C on "Barrier Details No.6" sheet.
11. Shim North barrier on SAS as required to match barrier height at Expansion Joint. Barrier slope shall not exceed 1%. Shim PL shall be installed under the barrier base PL and under the barrier connections. The drainage cut-out in the barrier diaphragm shall not be blocked and the caulk bead shall be thickened appropriately.
12. Unless noted otherwise where calculated overlay at shoulder is greater than 50, overlay shall be tapered to 50 at barrier outside the "Adjustment Transition Limits" to maintain 810 min above the overlay at the barrier.
13. Runoff the overlay to 50 mm thick at a rate no steeper than 1:100, in shoulders beyond expansion joint transition.
14. Expansion joint shall be laid following longitudinal profile with constant cross slope throughout the expansion joint.
15. The interior and exterior barrier plate at sliding interface shall be parallel to allow for longitudinal movement without binding.

REVISION 3 SUPERSEDES REVISIONS 1 & 2

CONTRACT CHANGE ORDER NO. _____
SHEET ____ OF ____

REQUESTS FOR INFORMATION NOT ADDRESSED IN THIS CCO REMAIN IN FORCE

MARK	DATE	DESCRIPTIONS	BY	CH'D	CCO#
3	10/22/10	HINGE A BARRIER RAIL MODIFICATIONS	TH	GB	25S1
2	01/30/09	HINGE A BARRIER RAIL MODIFICATIONS	TH	AB	25S1
1	03/28/08	HINGE A BARRIER RAIL MODIFICATIONS	TH	AS	25S1

REVISIONS

R. Valizadeh/V. Toan/Y.L./W.L./F.C.
DESIGN OVERSIGHT
SIGN OFF DATE 10/22/10

	BY	CHECKED
DESIGN	T. Ho	N. Vo
DETAILS	G. Baker	N. Vo
QUANTITIES	T. Ho	N. Vo

PREPARED FOR THE STATE OF CALIFORNIA DEPARTMENT OF TRANSPORTATION

ALL DIMENSIONS ARE IN MILLIMETERS UNLESS OTHERWISE SHOWN

R. Manzanarez
PROJECT ENGINEER

BRIDGE NO. 34-0006L/R
KILOMETER POST 13.2/13.9

SAN FRANCISCO OAKLAND BAY BRIDGE
EAST SPAN SEISMIC SAFETY PROJECT
SELF-ANCHORED SUSPENSION BRIDGE
(SUPERSTRUCTURE & TOWER)

BARRIER DETAILS NO. 5

Rev. Date: 5-18-98

ORIGINAL SCALE IN MILLIMETERS FOR REDUCED PLANS 0 10 20 30 40 50 60 70 80 90 100

CU 04
EA 0120F1

DISREGARD PRINTS BEARING EARLIER REVISION DATES

REVISION DATES (PRELIMINARY STAGE ONLY) 04/08/02 01/01/02 12/19/02 07/18/03

SHEET 476R3 OF

FILE => I:\bb\04-0120I\sas\contract plans and cco\cco\cco*25s1\6-revision 10-22-10\dgn\akbar04.dgn

USERNAME => arivera DATE PLOTTED => 22 OCT 2010 TIME PLOTTED => 13:58:29

100% PS&E

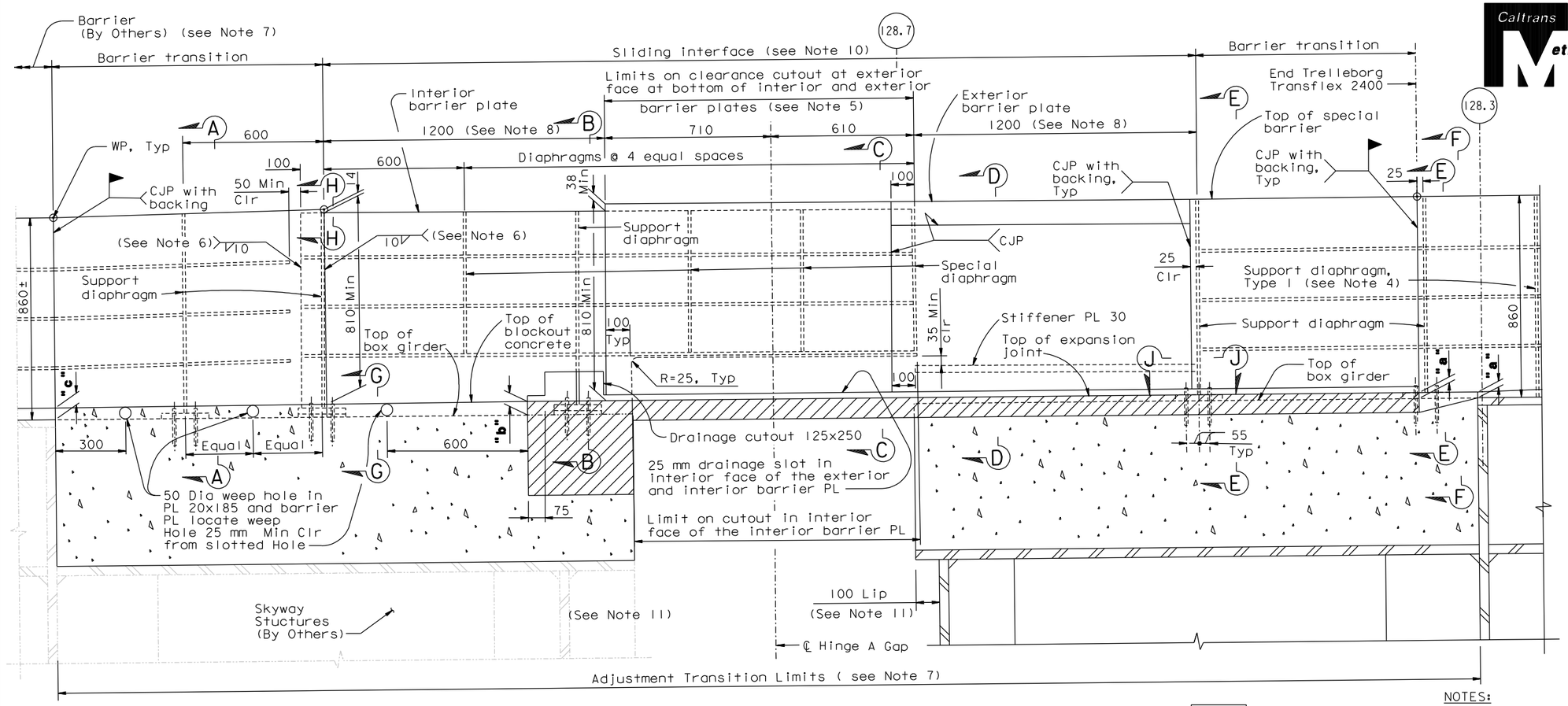

BARRIER AT HINGE A - SOUTH SIDE

("E" Line Shown, "W" Line Similar)

1:10

NOTES:

1. For details not shown, see "Barrier Details No.1" sheet.
2. For Standard diaphragm details, see Section C-C of "Barrier Details No.1" sheet.
3. For Sections A-A, B-B, C-C, D-D, F-F and G-G, see "Barrier Details No.6" sheet. For Sections E-E, H-H, J-J and Alt Section D-D, see "Barrier Details No.6A" sheet.
4. For support diaphragm Type I details not shown, see similar Section C-C on "Barrier Details No.1" sheet. For exterior barrier dimensions, see Section C-C on "Barrier Details No.1" sheet.
5. Cope barrier PL to clear PL 20x185, see Section C-C on "Barrier Details No.6" sheet.
6. For weld limits, see Section H-H on "Barrier Details 6A" sheet.
7. Field verify the as-built condition and dimensions before fabricating SAS barrier.
8. Values are for mean temperature of 20°C.
9. Unless noted otherwise where calculated overlay at shoulder is greater than 50, overlay shall be tapered to 50 at barrier outside the "Adjustment Transition Limits" to maintain 810 min above the overlay at the barrier.
10. The interior and exterior barrier plate at sliding interface shall be parallel to allow for longitudinal movement without binding.
11. Barrier on the SAS side shall be trimmed by an amount equal to the amount of field trimming done at the lip.

CONTRACT CHANGE ORDER NO. ____
SHEET ____ OF ____

REQUESTS FOR INFORMATION NOT ADDRESSED IN THIS CCO REMAIN IN FORCE

ALL DIMENSIONS ARE IN MILLIMETERS UNLESS OTHERWISE SHOWN

DIST.	COUNTY	ROUTE	KILOMETER POST TOTAL PROJECT	SHEET NO.	TOTAL SHEETS
04	SF	80	13.2/13.9	893S1	1204

REGISTERED ENGINEER - CIVIL
10-22-10
PLANS APPROVAL DATE

PROFESSIONAL ENGINEER — Tien Hung Ho — No. C 43990 — Exp. 06/30/11 — CIVIL — STATE OF CALIFORNIA

The State of California or its officers or agents shall not be responsible for the accuracy or completeness of electronic copies of this plan sheet.

T.Y. LIN / MOFFATT & NICHOL
825 BATTERY STREET
SAN FRANCISCO, CA 94111

Caltrans now has a web site! To get to the web site, go to: http://www.dot.ca.gov

R. Valizadeh/V. Toan/Y.L./W.L./F.C.
DESIGN OVERSIGHT
SIGN OFF DATE 10/22/10

MARK	DATE	DESCRIPTIONS	BY	CH'D	CCO#
0	10/22/10	HINGE A BARRIER RAIL MODIFICATIONS	TH	GB	25S1

REVISIONS

	BY	CHECKED
DESIGN	T. Ho	G. Baker
DETAILS	H. Patel	T. Ho
QUANTITIES	H. Patel	J. Duxbury

PREPARED FOR THE STATE OF CALIFORNIA DEPARTMENT OF TRANSPORTATION

R. Manzanarez
PROJECT ENGINEER

BRIDGE NO. 34-0006L/R
KILOMETER POST 13.2/13.9

SAN FRANCISCO OAKLAND BAY BRIDGE
EAST SPAN SEISMIC SAFETY PROJECT
SELF-ANCHORED SUSPENSION BRIDGE
(SUPERSTRUCTURE & TOWER)

BARRIER DETAILS NO.5A

Rev. Date: 5-18-98

ORIGINAL SCALE IN MILLIMETERS FOR REDUCED PLANS 0 10 20 30 40 50 60 70 80 90 100

CU 04
EA 0120F1

DISREGARD PRINTS BEARING EARLIER REVISION DATES 10/22/10

REVISION DATES (PRELIMINARY STAGE ONLY)

SHEET 476S1 OF

FILE => I:\bb\04-012001\sas\contract plans and cco\cco\cco#25s1\6-revision 10-22-10\dgn\akbar04a.dgn

USERNAME => arivera DATE PLOTTED => 22 OCT 2010 TIME PLOTTED => 14:01:34

100% PS&E

DIST.	COUNTY	ROUTE	KILOMETER POST TOTAL PROJECT	SHEET NO.	TOTAL SHEETS
04	SF	80	13.2/13.9	894R3	1204

REGISTERED ENGINEER - CIVIL

12-6-04
PLANS APPROVAL DATE

REGISTERED PROFESSIONAL ENGINEER Tien Hung Ho No. C 43990 Exp. 6/30/11 CIVIL STATE OF CALIFORNIA

The State of California or its officers or agents shall not be responsible for the accuracy or completeness of electronic copies of this plan sheet.

T.Y. LIN / MOFFATT & NICHOL
825 BATTERY STREET
SAN FRANCISCO, CA 94111

Caltrans now has a web site! To get to the web site, go to: http://www.dot.ca.gov

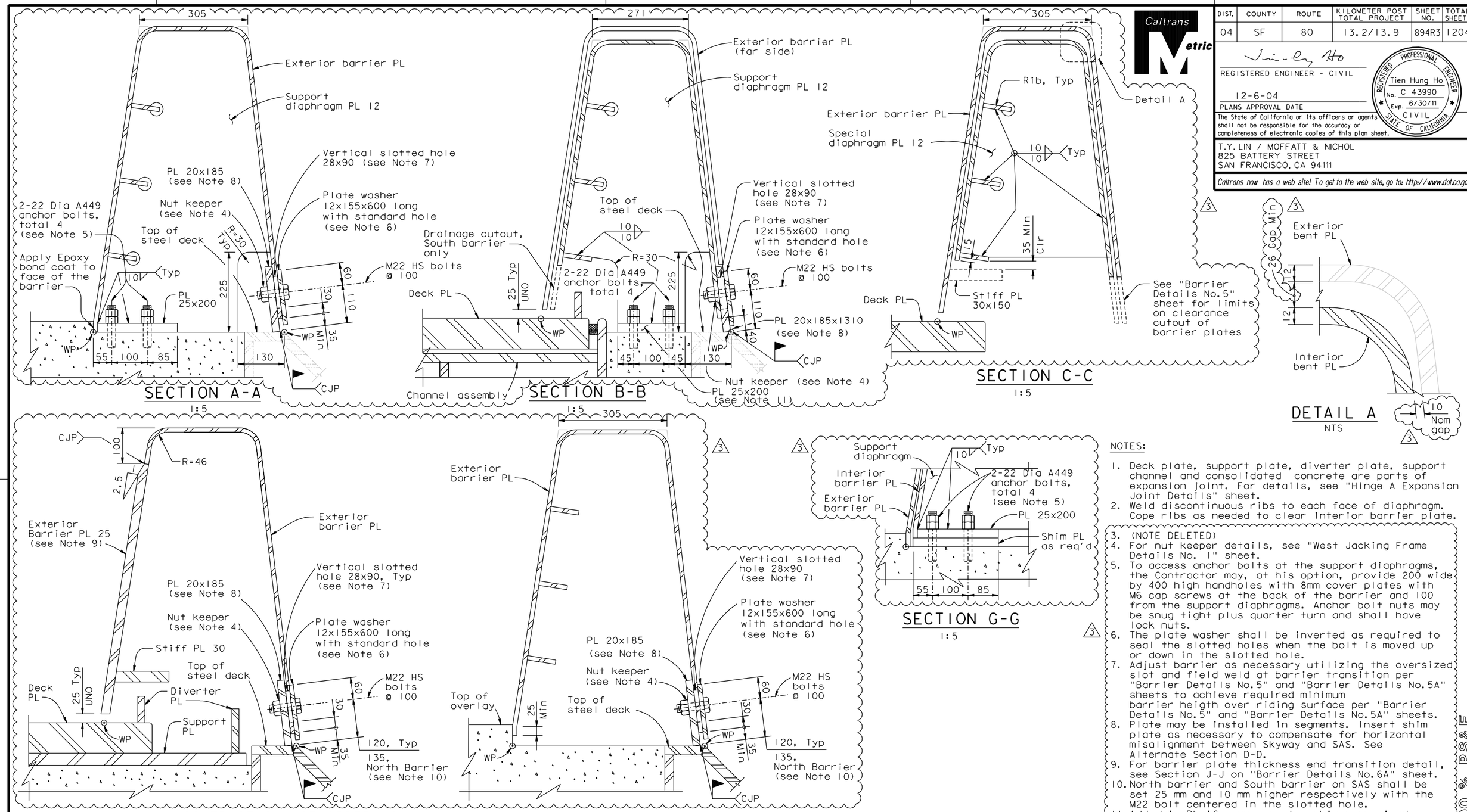

NOTES:

1. Deck plate, support plate, diverter plate, support channel and consolidated concrete are parts of expansion joint. For details, see "Hinge A Expansion Joint Details" sheet.
2. Weld discontinuous ribs to each face of diaphragm. Cope ribs as needed to clear interior barrier plate.
3. (NOTE DELETED)
4. For nut keeper details, see "West Jacking Frame Details No. 1" sheet.
5. To access anchor bolts at the support diaphragms, the Contractor may, at his option, provide 200 wide by 400 high handholes with 8mm cover plates with M6 cap screws at the back of the barrier and 100 from the support diaphragms. Anchor bolt nuts may be snug tight plus quarter turn and shall have lock nuts.
6. The plate washer shall be inverted as required to seal the slotted holes when the bolt is moved up or down in the slotted hole.
7. Adjust barrier as necessary utilizing the oversized slot and field weld at barrier transition per "Barrier Details No.5" and "Barrier Details No.5A" sheets to achieve required minimum barrier heigth over riding surface per "Barrier Details No.5" and "Barrier Details No.5A" sheets.
8. Plate may be installed in segments. Insert shim plate as necessary to compensate for horizontal misalignment between Skyway and SAS. See Alternate Section D-D.
9. For barrier plate thickness end transition detail, see Section J-J on "Barrier Details No.6A" sheet.
10. North barrier and South barrier on SAS shall be set 25 mm and 10 mm higher respectively with the M22 bolt centered in the slotted hole.
11. Add shim PL if necessary to achieve required barrier height.

CONTRACT CHANGE ORDER NO. ____
SHEET ____ OF ____

REQUESTS FOR INFORMATION NOT ADDRESSED IN THIS CCO REMAIN IN FORCE

REVISION 3 SUPERSEDES REVISIONS 1 & 2

ALL DIMENSIONS ARE IN MILLIMETERS UNLESS OTHERWISE SHOWN

MARK	DATE	DESCRIPTIONS	BY	CH'D	CCO#
3	10/22/10	HINGE A BARRIER RAIL MODIFICATIONS	TH	GB	25SI
2	01/30/09	HINGE A BARRIER RAIL MODIFICATIONS	TH	AB	25SI
1	03/28/08	HINGE A BARRIER RAIL MODIFICATIONS	TH	AS	25SI

REVISIONS

R. Valizadeh/V. Toan/Y.L./W.L./F.C.
DESIGN OVERSIGHT
Y. Liu
SIGN OFF DATE 10/22/10

	BY	CHECKED
DESIGN	T. Ho	N. Vo
DETAILS	G. Baker	N. Vo
QUANTITIES	T. Ho	N. Vo

PREPARED FOR THE STATE OF CALIFORNIA DEPARTMENT OF TRANSPORTATION

R. Manzanarez
PROJECT ENGINEER

BRIDGE NO. 34-0006L/R
KILOMETER POST 13.2/13.9

SAN FRANCISCO OAKLAND BAY BRIDGE
EAST SPAN SEISMIC SAFETY PROJECT
SELF-ANCHORED SUSPENSION BRIDGE
(SUPERSTRUCTURE & TOWER)

BARRIER DETAILS NO. 6

Rev. Date: 5-18-98

ORIGINAL SCALE IN MILLIMETERS FOR REDUCED PLANS 0 10 20 30 40 50 60 70 80 90 100

CU 04
EA 0120F1

DISREGARD PRINTS BEARING EARLIER REVISION DATES 04/08/02 07/01/02 12/19/02 07/18/03

REVISION DATES (PRELIMINARY STAGE ONLY)

SHEET 477R3 OF

FILE => I:\bb\04-0120I\sas\contract plans and cco\cco\cco#25si\6-revision 10-22-10\dgn\akbar05.dgn

100 % PS&E

USERNAME => orivera DATE PLOTTED => 22 OCT 2010 TIME PLOTTED => 14:03:30

DIST.	COUNTY	ROUTE	KILOMETER POST TOTAL PROJECT	SHEET NO.	TOTAL SHEETS
04	SF	80	13.2/13.9	894S1	1204

REGISTERED ENGINEER - CIVIL

10-22-10
PLANS APPROVAL DATE

REGISTERED PROFESSIONAL ENGINEER Tien Hung Ho No. C 43990 Exp. 06/30/11 CIVIL STATE OF CALIFORNIA

The State of California or its officers or agents shall not be responsible for the accuracy or completeness of electronic copies of this plan sheet.

T.Y. LIN / MOFFATT & NICHOL
825 BATTERY STREET
SAN FRANCISCO, CA 94111

Caltrans now has a web site! To get to the web site, go to: http://www.dot.ca.gov

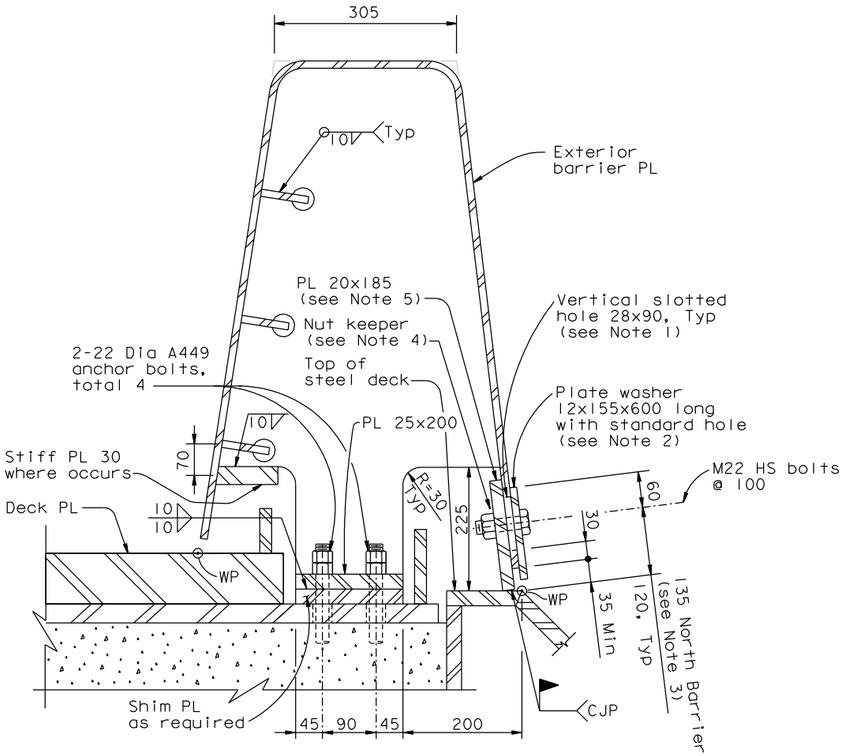

SECTION E-E
1:5

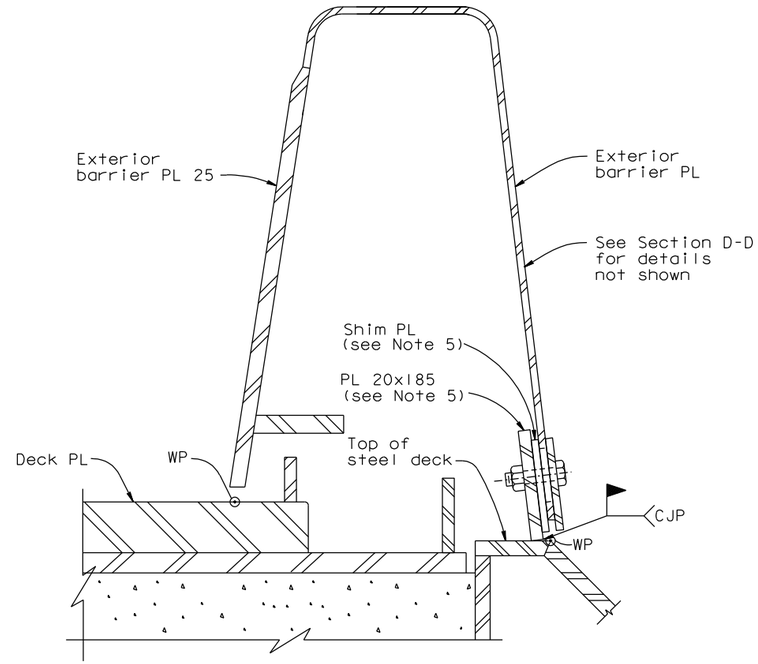

ALTERNATE SECTION D-D
1:5

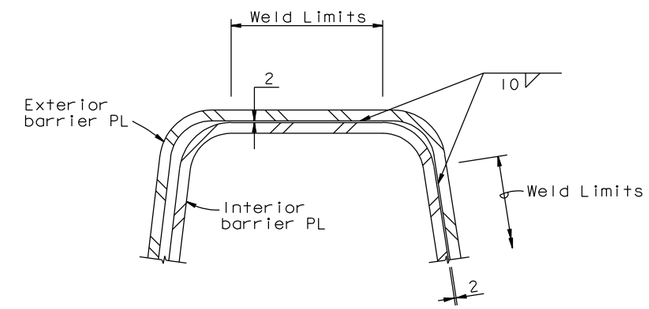

SECTION H-H
NTS

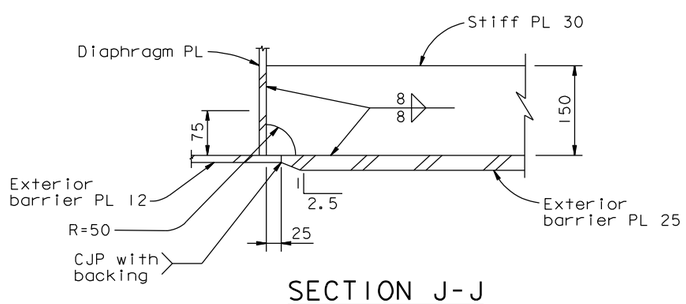

SECTION J-J
1:5

NOTES:

1. Adjust barrier as necessary utilizing the oversized slot and field weld to achieve required minimum barrier height over riding surface per "Barrier Details No.5" and "Barrier Details No.5A" Sheets.
2. The plate washer shall be inverted as required to seal the slotted holes when the bolt is moved up or down in the slotted hole.
3. North barrier and South barrier on SAS shall be set 25 mm and 10 mm higher respectively with the M22 bolt centered in the slotted hole.
4. For nut keeper details, see "West Jacking Frame Details No.1" sheet.
5. Plate may be installed in segments. Insert shim plate as necessary to compensate for horizontal misalignment between Skyway and SAS.

CONTRACT CHANGE ORDER NO. ____
SHEET ____ OF ____

REQUESTS FOR INFORMATION NOT ADDRESSED IN THIS CCO REMAIN IN FORCE

ALL DIMENSIONS ARE IN MILLIMETERS UNLESS OTHERWISE SHOWN

R. Valizadeh/V.Toan/Y.L./W.L./F.C.
DESIGN OVERSIGHT
SIGN OFF DATE 10/22/10

MARK	DATE	DESCRIPTIONS	BY	CH'D	CCO#
0	10/22/10	HINGE A BARRIER RAIL MODIFICATIONS	TH	GB	25S1

REVISIONS

DESIGN	BY T. Ho	CHECKED G. Baker	
DETAILS	BY H. Patel	CHECKED T. Ho	
QUANTITIES	BY H. Patel	CHECKED J. Duxbury	

PREPARED FOR THE STATE OF CALIFORNIA DEPARTMENT OF TRANSPORTATION

R. Manzanarez
PROJECT ENGINEER

BRIDGE NO. 34-0006L/R
KILOMETER POST 13.2/13.9

SAN FRANCISCO OAKLAND BAY BRIDGE
EAST SPAN SEISMIC SAFETY PROJECT
SELF-ANCHORED SUSPENSION BRIDGE
(SUPERSTRUCTURE & TOWER)

BARRIER DETAILS NO.6A

Rev. Date: 5-18-98

ORIGINAL SCALE IN MILLIMETERS FOR REDUCED PLANS 0 10 20 30 40 50 60 70 80 90 100

CU 04
EA 0120F1

DISREGARD PRINTS BEARING EARLIER REVISION DATES 10/22/10

REVISION DATES (PRELIMINARY STAGE ONLY)

SHEET 477S1 OF

FILE => I:\bb\04-012001\sas\contract plans and cco\cco\cco#25s1\6-revision 10-22-10\dgn\akbar05a.dgn

100% PS&E

USERNAME => arivera DATE PLOTTED => 22 OCT 2010 TIME PLOTTED => 14:08:03