DIST.	COUNTY	ROUTE	KILOMETER POST TOTAL PROJECT	SHEET NO.	TOTAL SHEETS
04	SF	80	13.2/13.9	893R4	1204

REGISTERED ENGINEER - CIVIL

12-6-04
PLANS APPROVAL DATE

REGISTERED PROFESSIONAL ENGINEER Tien Hung Ho No. C 43990 Exp. 06/30/11 CIVIL STATE OF CALIFORNIA

The State of California or its officers or agents shall not be responsible for the accuracy or completeness of electronic copies of this plan sheet.

T.Y. LIN / MOFFATT & NICHOL
825 BATTERY STREET
SAN FRANCISCO, CA 94111

Caltrans now has a web site! To get to the web site, go to: http://www.dot.ca.gov

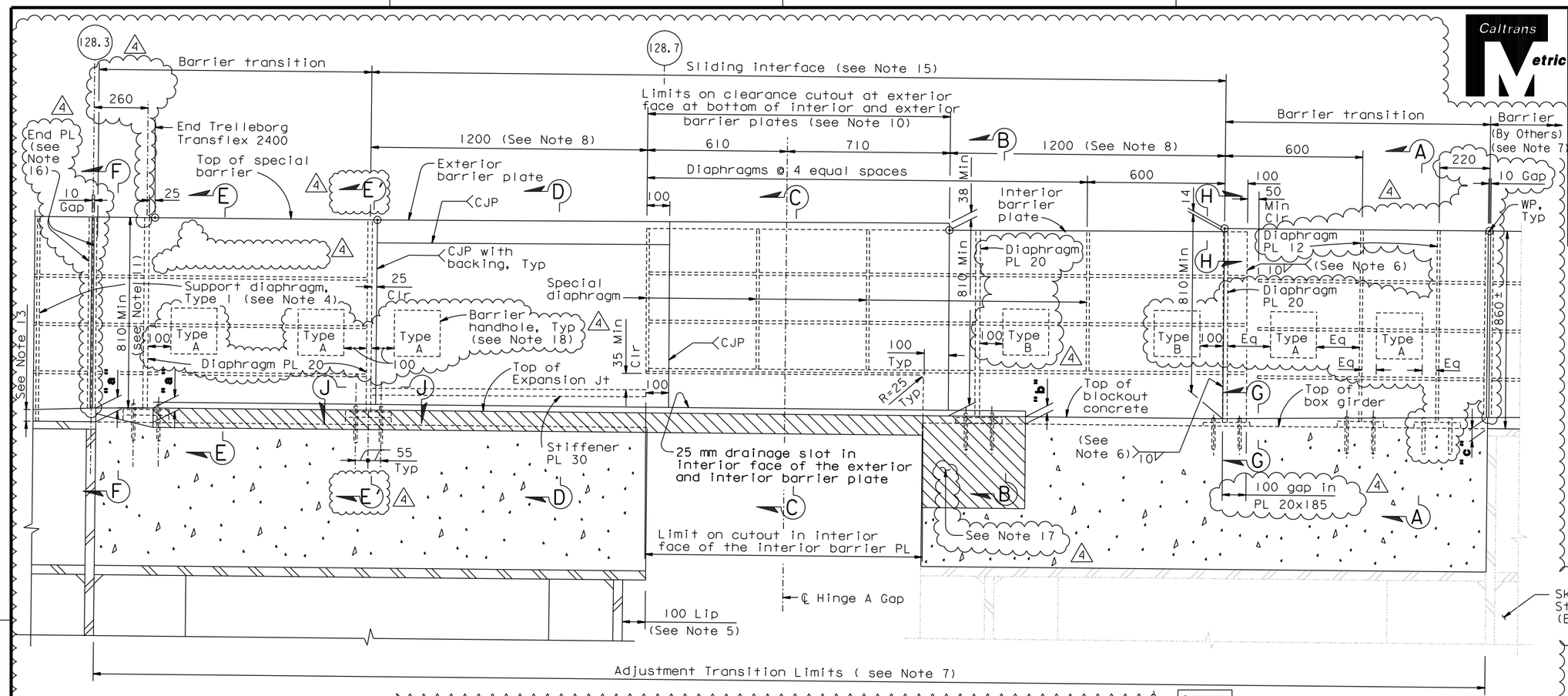

BARRIER AT HINGE A - NORTH SIDE

("E" Line Shown, "W" Line Similar)
1:10

PP		PROPOSED OVERLAY THICKNESS E Line "a"	E Line "b"	E Line "c"	W Line "a"	W Line "b"	W Line "c"	JOINT CROSS SLOPE (See Note 14) E Line	W Line
		mm (See Note 9)			mm (See Note 9)			%	%
Exp Jt Blockout	N	67	38	42	57	47	43	3.186	3.102
	S	25	57	50	32	50	50		

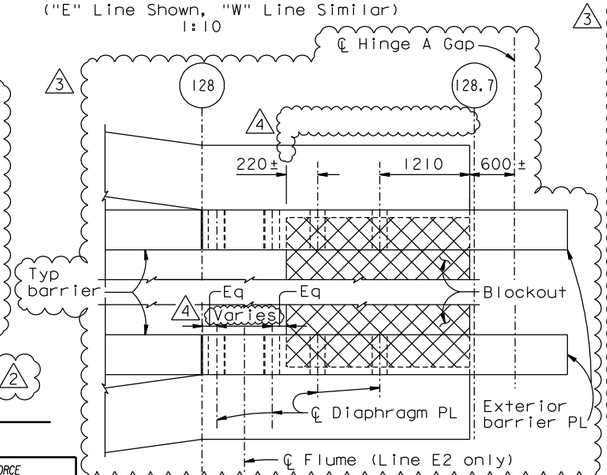

BARRIER AT HINGE A - PLAN VIEW

1:40

- Min overlay thickness = 25 mm
- Max overlay thickness = 90 mm
- Rate of change of cross slope = 0.2% / m

10. Cope barrier PL to clear PL 20x185, see Section C-C on "Barrier Details No.6" sheet.
11. Shim North barrier on SAS as required to match barrier height at Expansion Joint. Barrier slope shall not exceed 1%. Shim PL shall be installed under the barrier base PL and under the barrier connections. The drainage cut-out in the barrier diaphragm shall not be blocked and the caulk bead shall be thickened appropriately.
12. Unless noted otherwise where calculated overlay at shoulder is greater than 50, overlay shall be tapered to 50 at barrier outside the "Adjustment Transition Limits" to maintain 810 min above the overlay at the barrier.
13. Runoff the overlay to 50 mm thick at a rate no steeper than 1:100, in shoulders beyond expansion joint transition.
14. Expansion joint shall be laid following longitudinal profile with constant cross slope throughout the expansion joint.
15. The interior and exterior barrier plate at sliding interface shall be parallel to allow for longitudinal movement without binding.

At the Contractor's option, the barrier may be detailed straight from PP128.3 to the existing Skyway barrier, subject to review and approval of the Engineer.

16. For end plate details, see "Barrier Details No.2" sheet.
17. At the Contractor's option, it is acceptable to block out concrete and pour a non-shrink grout pad under base after setting alignment, subject to review and approval of the Engineer. All anchor bolts to be tightened after grout attains a minimum compressive strength of f'ci = 75% f'c.
18. Barrier handholes are on the exterior face. For details, see "Barrier Details No.6A" sheet.

NOTES:

1. For details not shown, see "Barrier Details No.1" sheet.
2. For Standard diaphragm details, see Section C-C of "Barrier Details No.1" sheet.
3. For Sections A-A, B-B, C-C, D-D, F-F and G-G, see "Barrier Details No.6" sheet. For Sections E-E, H-H, J-J and Alt Section D-D, see "Barrier Details No.6A" sheet.
4. For support diaphragm Type 1 details not shown, see similar Section C-C on "Barrier Details No.1" sheet. For exterior barrier dimensions, see Section C-C on "Barrier Details No.1" sheet.
5. Barrier on the SAS side shall be trimmed by an amount equal to the amount of field trimming done at the lip.
6. For weld limits, see Section H-H on "Barrier Details 6A" sheet.
7. Field verify the as-built condition and dimensions before fabricating SAS barrier.
8. Values are for mean temperature of 20°C.
9. Tabulated overlay thickness is projected thickness at barrier based on Lowered Skyway Survey by ABF dated December 2009 and SAS cross slope of 3%. The contractor shall survey SAS and Skyway deck surfaces after installing Hinge A pipe beams. Based on this survey and the following criteria, the overlay thickness shall be calculated and submitted for approval.

REVISION 3 SUPERSEDES REVISIONS 1 & 2

CONTRACT CHANGE ORDER NO. ____
SHEET ___ OF ___

REQUESTS FOR INFORMATION NOT ADDRESSED IN THIS CCO REMAIN IN FORCE

MARK	DATE	DESCRIPTIONS	BY	CH'D	CCO#
4	03/25/11	HINGE A BARRIER RAIL MODIFICATIONS	TH	GB	25SI
3	10/22/10	HINGE A BARRIER RAIL MODIFICATIONS	TH	GB	25SI
2	01/30/09	HINGE A BARRIER RAIL MODIFICATIONS	TH	AB	25SI
1	03/28/08	HINGE A BARRIER RAIL MODIFICATIONS	TH	AS	25SI

REVISIONS

R. Valizadeh/V. Toan/Y.L./W.L./F.C.
DESIGN OVERSIGHT
SIGN OFF DATE 03/29/11

Rev. Date: 5-18-98

DESIGN	BY T. Ho	CHECKED N. Vo	
DETAILS	BY G. Baker	CHECKED N. Vo	
QUANTITIES	BY T. Ho	CHECKED N. Vo	

PREPARED FOR THE STATE OF CALIFORNIA DEPARTMENT OF TRANSPORTATION

ORIGINAL SCALE IN MILLIMETERS FOR REDUCED PLANS 0 10 20 30 40 50 60 70 80 90 100

ALL DIMENSIONS ARE IN MILLIMETERS UNLESS OTHERWISE SHOWN

R. Manzanarez
PROJECT ENGINEER

BRIDGE NO. 34-0006L/R
KILOMETER POST 13.2/13.9

CU 04
EA 0120F1

DISREGARD PRINTS BEARING EARLIER REVISION DATES

REVISION DATES (PRELIMINARY STAGE ONLY) 04/08/02 07/01/02 12/19/02 07/18/03

SHEET 476R4 OF

SAN FRANCISCO OAKLAND BAY BRIDGE
EAST SPAN SEISMIC SAFETY PROJECT
SELF-ANCHORED SUSPENSION BRIDGE
(SUPERSTRUCTURE & TOWER)

BARRIER DETAILS NO.5

FILE => I:\bb\04-012001\sas\contract plans and cco\cco\cco*25si\7-revision 03-25-11\dgn\akbar04.dgn

USERNAME => DWinrow DATE PLOTTED => 24 MAR 2011 TIME PLOTTED => 12:51:56

100% PS&E