DIST	COUNTY	ROUTE	KILOMETER POST TOTAL PROJECT	SHEET No	TOTAL SHEETS
04	SF	80	13.2/13.9	864S4	1204

REGISTERED CIVIL ENGINEER DATE

07-30-10
PLANS APPROVAL DATE

REGISTERED PROFESSIONAL ENGINEER Enrico G. Maggenti No. 46920 Exp. 6/30/11 CIVIL STATE OF CALIFORNIA

The State of California or its officers or agents shall not be responsible for the accuracy or completeness of electronic copies of this plan sheet.

Caltrans now has a web site! To get to the web site, go to: http://www.dot.ca.gov

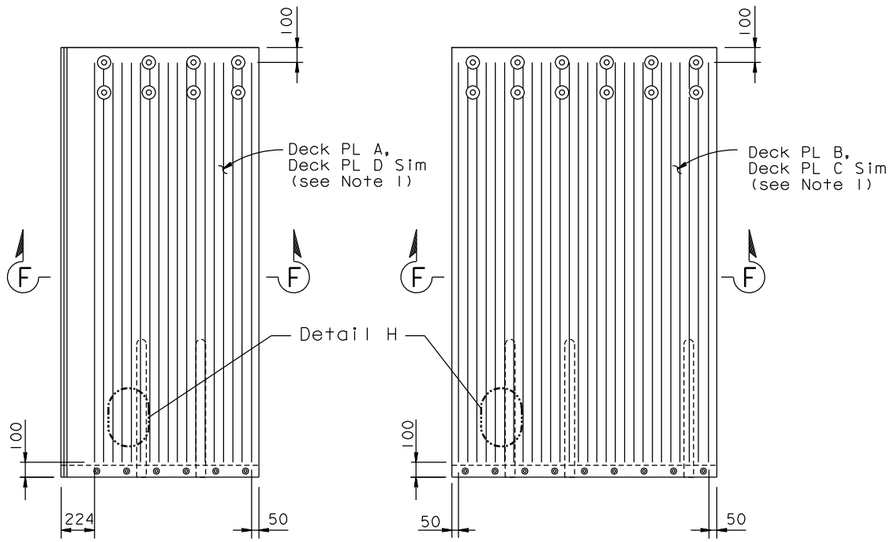

DECK PLATE A/D
1:20
(Deck PL A Shown, Deck PL D Similar)

DECK PLATE B/C
1:20
(Deck PL B Shown, Deck PL C Similar)

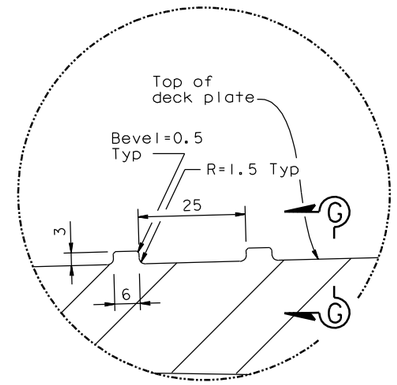

DETAIL G
1:1

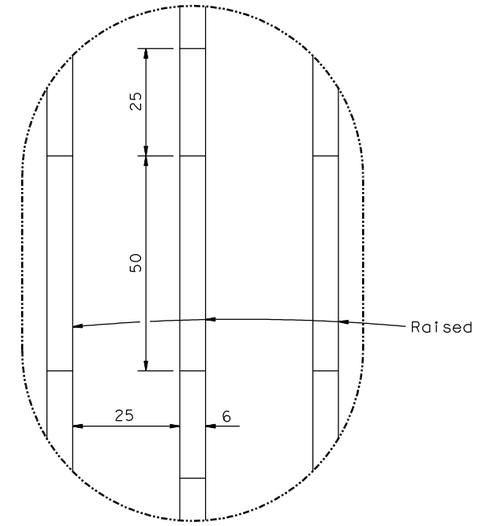

DETAIL H
1:1

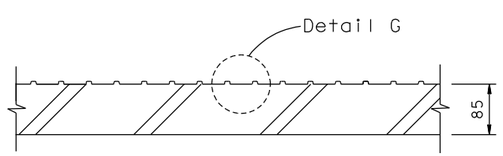

SECTION F-F
1:5

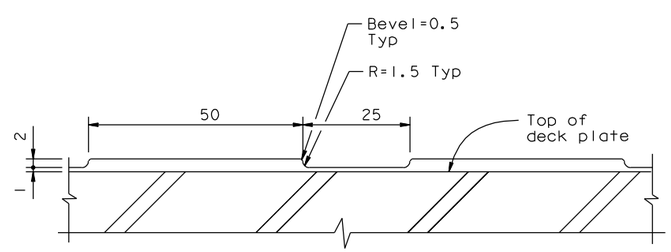

SECTION G-G
1:1

NOTES:

1. For Details not shown, see "Hinge A Expansion Joint Details No.5" sheet.

CONTRACT CHANGE ORDER NO. _____
SHEET ____ OF ____

REQUESTS FOR INFORMATION NOT ADDRESSED IN THIS CCO REMAIN IN FORCE

Caltrans Metric

MARK	DATE	DESCRIPTIONS	BY	CH'D	CCO#
0	07/30/10	SEISMIC JOINT MODIFICATIONS HINGE A	RM	AA	25

REVISIONS

ALL DIMENSIONS ARE IN MILLIMETERS UNLESS OTHERWISE SHOWN

ORIGINAL SCALE IN MILLIMETERS FOR REDUCED PLANS 0 10 20 30 40 50 60 70 80 90 100

	BY	CHECKED
DESIGN	R MAGGENTI	A AKINSANYA
DETAILS	R MAGGENTI	A AKINSANYA
QUANTITIES	R MAGGENTI	A AKINSANYA

STATE OF CALIFORNIA
DEPARTMENT OF TRANSPORTATION

DIVISION OF ENGINEERING SERVICES
STRUCTURE DESIGN
SPECIAL DESIGNS BRANCH

CU 04
EA 0120F1

BRIDGE NO. 34-0006 L/R
KILOMETER POST 13.2/13.9

DISREGARD PRINTS BEARING EARLIER REVISION DATES 07/30/10

REVISION DATES

SHEET 447S4 OF

SAN FRANCISCO OAKLAND BAY BRIDGE
EAST SPAN SEISMIC SAFETY PROJECT

SELF-ANCHORED SUSPENSION BRIDGE
(SUPERSTRUCTURE & TOWER)

SEISMIC JOINT (HINGE A)

HINGE A EXPANSION JOINT DETAILS NO. 6

FILE => spec_des_br_proj/04-0120F1/1:\bb\04-012001\sas\contract plans and cco\cco\cco#25\5-revision 07-30-10\dgn\akjnt01d.dgn

USERNAME => arivera DATE PLOTTED => 30 JUL 2010 TIME PLOTTED => 11:38:39