DIST.	COUNTY	ROUTE	KILOMETER POST TOTAL PROJECT	SHEET NO.	TOTAL SHEETS
04	SF	80	13.2/13.9	864S2	1204

REGISTERED ENGINEER - CIVIL

07-30-10

PLANS APPROVAL DATE

The State of California or its officers or agents shall not be responsible for the accuracy or completeness of electronic copies of this plan sheet.

REGISTERED PROFESSIONAL ENGINEER Marwan N. Nader No. C 054426 Exp. 12/31/11 CIVIL STATE OF CALIFORNIA

T.Y. LIN / MOFFATT & NICHOL
825 BATTERY STREET
SAN FRANCISCO, CA 94111

Caltrans now has a web site! To get to the web site, go to: http://www.dot.ca.gov

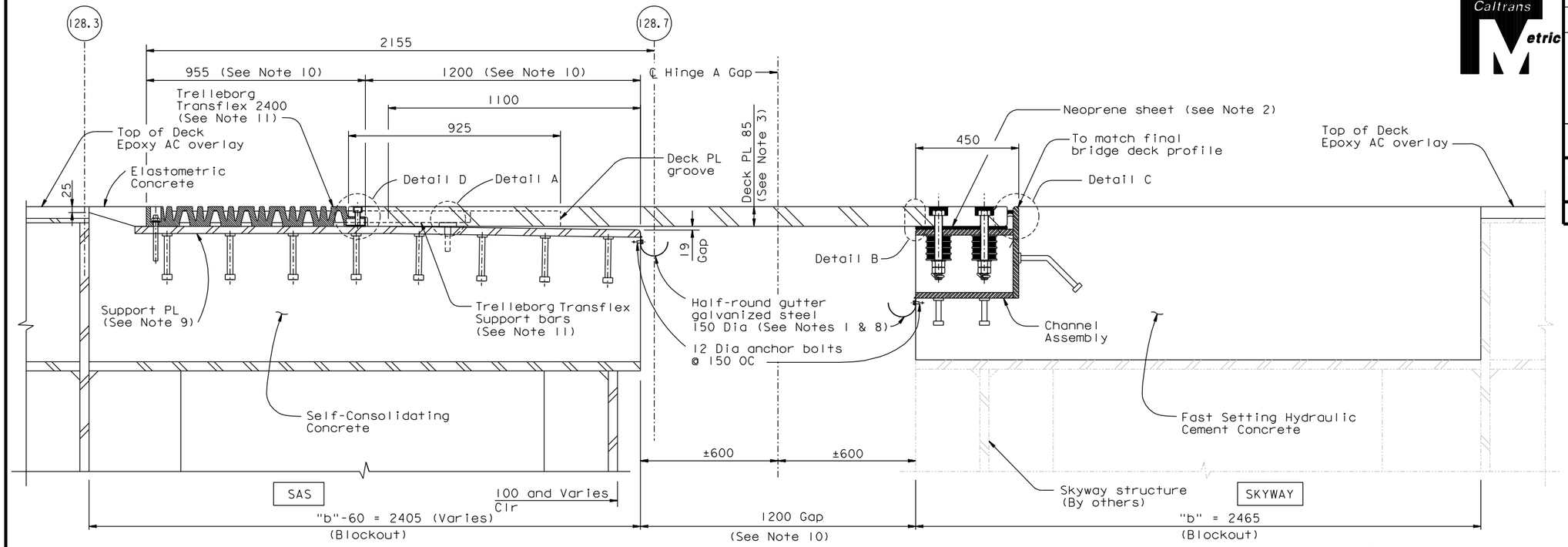

SECTION A-A

1:10

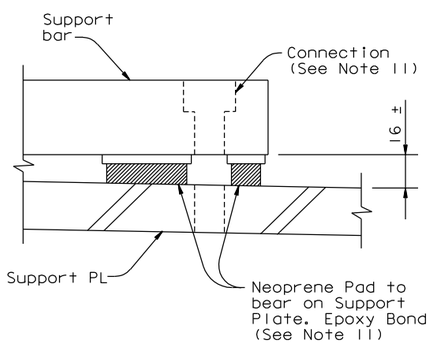

DETAIL A

1:2

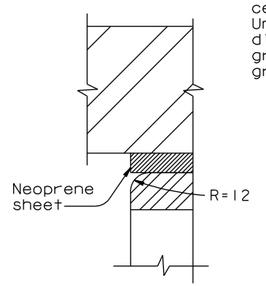

DETAIL B

1:2

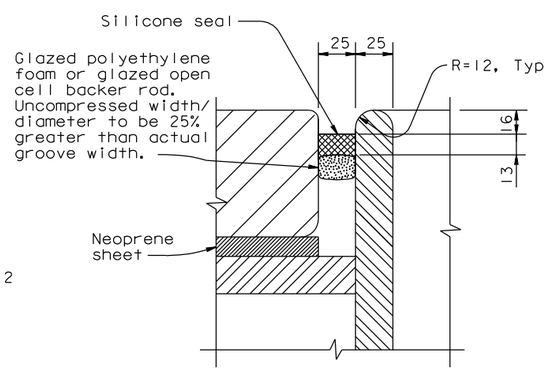

DETAIL C

1:2

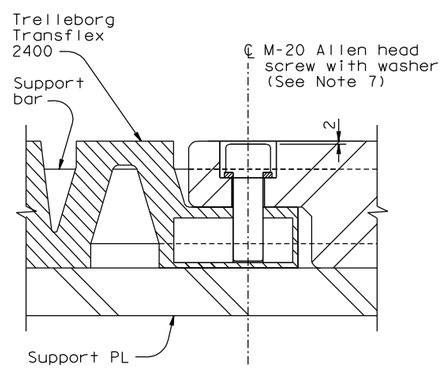

DETAIL D

1:2

NOTES:

1. Use caulking or sealant between gutter and concrete.
2. 40 mm holes in neoprene sheets shall be drilled or punched so that the neoprene is not distorted at the time of installation. See "Hinge A Expansion Joint Details No.8" sheet.
3. For deck plate layout and details, see "Hinge A Expansion Joint Details No.3" sheet. For deck plate friction groove pattern, see "Hinge A Expansion Joint Details No. 6" sheet.
4. For mild steel reinforcement in blockout areas, see "Hinge A Expansion Joint Details No.10" sheet.
5. For channel assembly details, see "Hinge A Expansion Joint Details No.7" and "Hinge A Expansion Joint Details No.8" sheets.
6. Place deck plate, support plate and channel assembly so that full bearing is achieved between i) deck plate and channel assembly and ii) deck plate and support plates as shown in Section A-A.
7. M-20 Allen head screw shall be stainless steel.
8. Gutter shall be placed on the same side as the support plate, 75 mm minimum from the deck plate. Gutter shall be parallel to deck cross slope.
9. For support plate details see "Hinge A Expansion Joint Details No.9" sheet.
10. Values are for mean temperature of 20° C.
11. All the connection hardware shall be supplied with Trelleborg Transflex 2400. The connection of Transflex 2400 and that of the support bar to the blockout concrete shall be drill and bond dowels.

CONTRACT CHANGE ORDER NO. _____
SHEET ____ OF ____

REQUESTS FOR INFORMATION NOT ADDRESSED IN THIS CCO REMAIN IN FORCE

ALL DIMENSIONS ARE IN MILLIMETERS UNLESS OTHERWISE SHOWN

MARK	DATE	DESCRIPTIONS	BY	CH'D	CCO#
0	07/30/10	SEISMIC JOINT MODIFICATIONS HINGE A	CR	MN	25

REVISIONS

R. Valizadeh/V. Toan/Y.L./W.L./F.C.
DESIGN OVERSIGHT
Roya Valizadeh / Vong Toan / Y. Liu
SIGN OFF DATE 07/30/10

	BY	CHECKED
DESIGN	C. Redfield	M. Nader
DETAILS	H. Patel	M. Benoit
QUANTITIES	H. Patel	J. Duxbury

PREPARED FOR THE STATE OF CALIFORNIA DEPARTMENT OF TRANSPORTATION

R. Manzanarez
PROJECT ENGINEER

BRIDGE NO. 34-0006L/R
KILOMETER POST 13.2/13.9

SAN FRANCISCO OAKLAND BAY BRIDGE
EAST SPAN SEISMIC SAFETY PROJECT
SELF-ANCHORED SUSPENSION BRIDGE
(SUPERSTRUCTURE & TOWER)

HINGE A EXPANSION JOINT DETAILS NO. 4

Rev. Date: 5-18-98

ORIGINAL SCALE IN MILLIMETERS FOR REDUCED PLANS 0 10 20 30 40 50 60 70 80 90 100

CU 04
EA 0120F1

DISREGARD PRINTS BEARING EARLIER REVISION DATES 07/30/10

REVISION DATES (PRELIMINARY STAGE ONLY)

SHEET 447S2 OF

FILE => I:\bb\04-012001\sas\contract plans and cco\cco\cco#25\5-revision 07-30-10\dgn\akjnt01b.dgn

100 % PS&E

USERNAME => orivera DATE PLOTTED => 30 JUL 2010 TIME PLOTTED => 11:37:13