DIST	COUNTY	ROUTE	KILOMETER POST TOTAL PROJECT	SHEET No	TOTAL SHEETS
04	SF	80	13.2/13.9	868R1	1204

REGISTERED CIVIL ENGINEER DATE

09/15/2006
PLANS APPROVAL DATE

REGISTERED PROFESSIONAL ENGINEER — EFTHYMIOS DELIS — No. 51434 — Exp. 6-30-08 — CIVIL — STATE OF CALIFORNIA

The State of California or its officers or agents shall not be responsible for the accuracy or completeness of electronic copies of this plan sheet.

Caltrans now has a web site! To get to the web site, go to: http://www.dot.ca.gov

MARK	DATE	DESCRIPTIONS	BY	CH'D
1	9/15/06	Deck PL changes	TD	AK

REVISIONS

CONTRACT CHANGE ORDER NO. 25
SHEET ___ OF ___

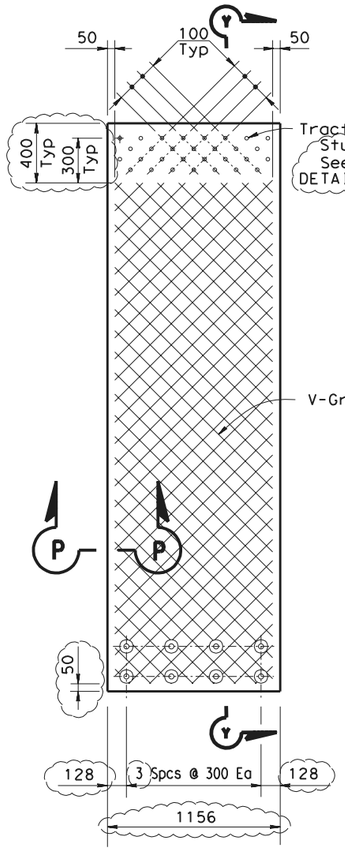

DECK PLATE A 1
SCALE = 1:20

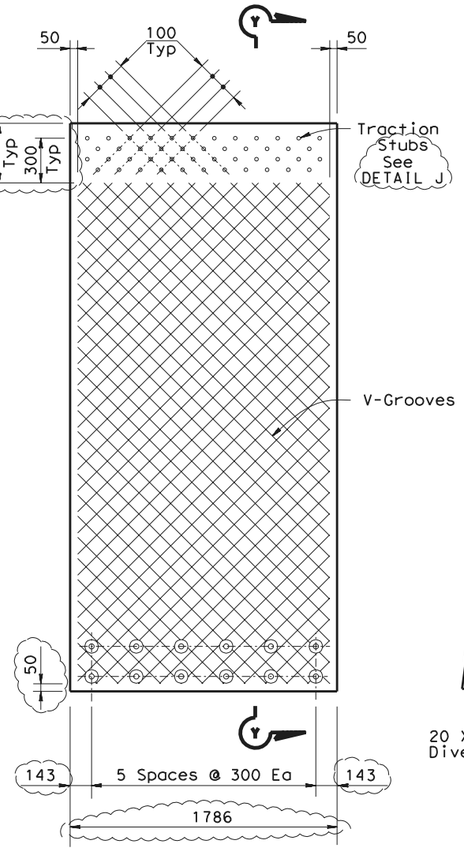

DECK PLATE B 1
SCALE = 1:20

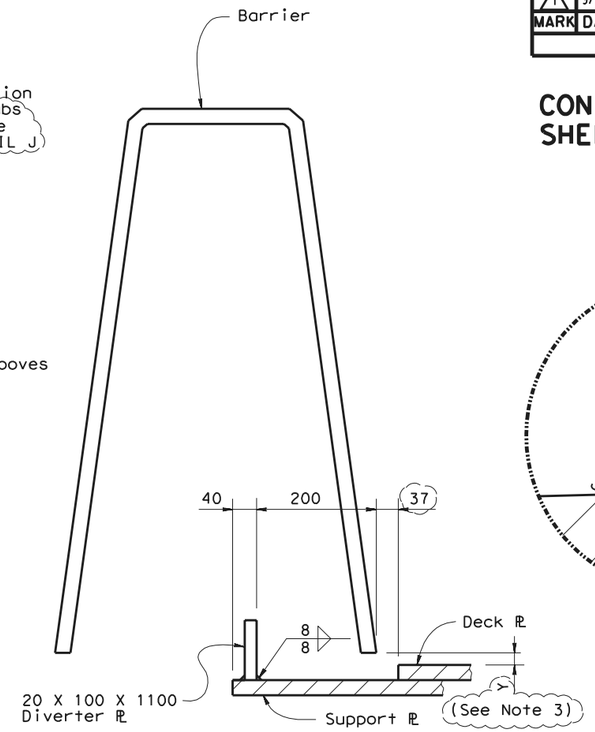

SECTION P-P 1
SCALE = 1:5

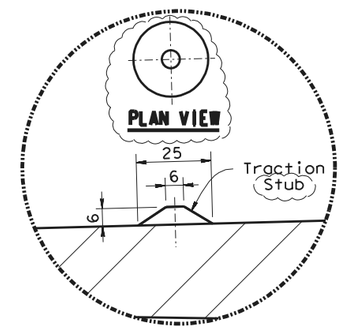

DETAIL J 1
SCALE = 1:1

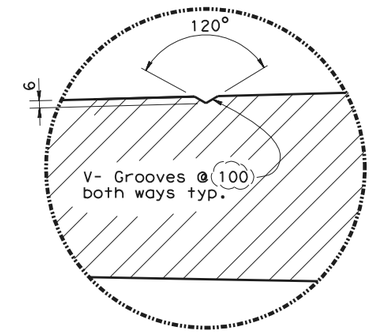

DETAIL K 1
SCALE = 1:2.5

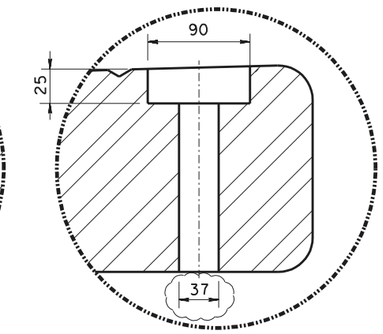

DETAIL L 1
SCALE = 1:2.5

NOTES: 1

1. V-Groove pattern is similar for all Plates
2. For deck plate plan see "DECK PLATE DETAILS NO 1" sheet.
3. In Section P-P, Y may vary from 10 mm (min) to 20 mm (max).
4. Traction stubs to be machined.
5. For td value see "CROSS SECTION" sheet.

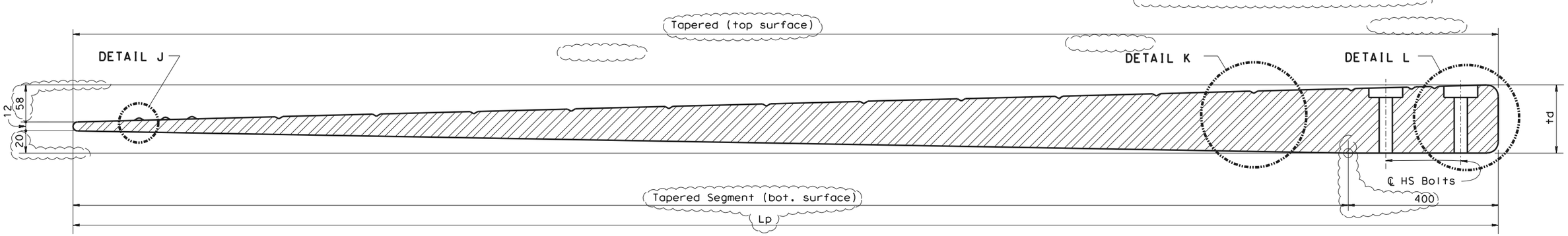

SECTION Y-Y 1
NO SCALE

THE CONTRACTOR SHALL VERIFY ALL CONTROLLING FIELD DIMENSIONS BEFORE ORDERING OR FABRICATING ANY MATERIAL.

Caltrans Metric

	BY	CHECKED
DESIGN	E DELIS	A KARTOUM
DETAILS	A R DUDSAK	A KARTOUM
QUANTITIES	E DELIS	A KARTOUM

STATE OF CALIFORNIA
DEPARTMENT OF TRANSPORTATION

DIVISION OF ENGINEERING SERVICES
STRUCTURE DESIGN
SPECIAL DESIGNS BRANCH

BRIDGE NO. 34-0006 L/R
KILOMETER POST 13.2/13.9

SAN FRANCISCO OAKLAND BAY BRIDGE
EAST SPAN SEISMIC SAFETY PROJECT
SELF-ANCHORED SUSPENSION BRIDGE
(SUPERSTRUCTURE & TOWER)

SEISMIC JOINT (HINGE A)
DECK PLATE DETAILS NO 2

ALL DIMENSIONS ARE IN MILLIMETERS UNLESS OTHERWISE SHOWN

ORIGINAL SCALE IN MILLIMETERS FOR REDUCED PLANS 0 10 20 30 40 50 60 70 80 90 100

CU 04
EA 0120F1

DISREGARD PRINTS BEARING EARLIER REVISION DATES

REVISION DATES 1/24/06 8/18/06 10/30/06

SHEET 451R1 OF

FILE => spec_des_br_proj/04-0120F1/$REQUEST

STRUCTURES DESIGN DETAIL SHEET (METRIC) (REV.03-17-04)

USERNAME => $USER DATE PLOTTED => $DATE TIME PLOTTED => $TIME

C:\TEMP SAS\zakjsb04.dgn 3/30/2007 10:18:04 AM