DIST	COUNTY	ROUTE	KILOMETER POST TOTAL PROJECT	SHEET No	TOTAL SHEETS
04	SF	80	13.2/13.9	865R1	1204

REGISTERED CIVIL ENGINEER DATE

09/15/2006
PLANS APPROVAL DATE

REGISTERED PROFESSIONAL ENGINEER
EFTHYMIOS DELIS
No. 51434
Exp. 6-30-08
CIVIL
STATE OF CALIFORNIA

The State of California or its officers or agents shall not be responsible for the accuracy or completeness of electronic copies of this plan sheet.

Caltrans now has a web site! To get to the web site, go to: http://www.dot.ca.gov

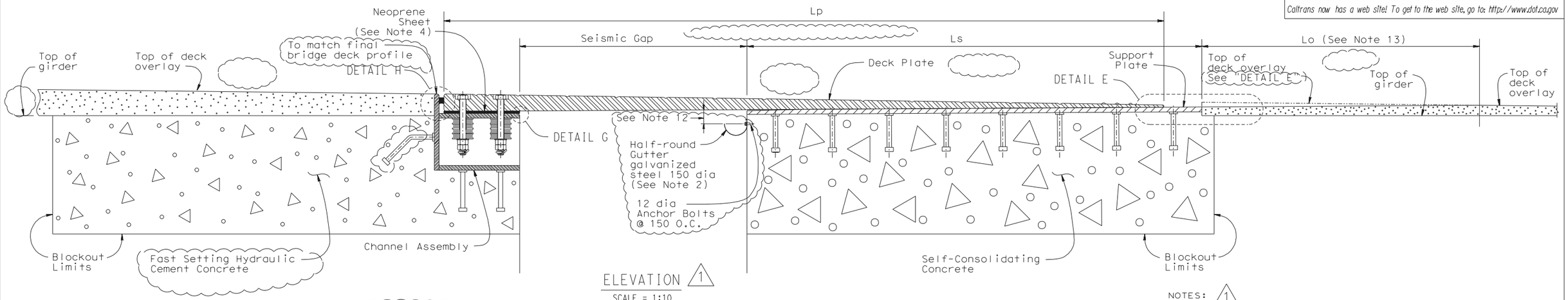

ELEVATION 1
SCALE = 1:10

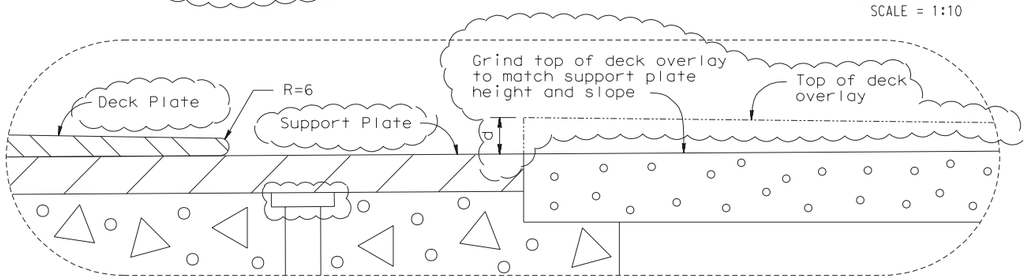

DETAIL E 1
SCALE = 1:2

JOINT INFORMATION 1			
LOCATION		HINGE AE	HINGE AW
SKEW (°)		0	0
DECK PLATE	Thickness t_d (mm)	90	90
	Length Lp (mm)	3800	3800
SUPPORT PLATE	Thickness ts (mm)	32	32
	Length Ls (mm)	2400	2400
SEISMIC GAP @ 20°	(mm)	1200	1200
MAXIMUM DECK GRIND	d (mm)	13	24

NOTES: 1

1. Install Seismic Joint after erecting bike path, placing deck overlay up to the limit of the blockout, utilities and barrier.
2. Use caulking or sealant between gutter and concrete.
3. Seismic Joint to be used in conjunction with closure pour. Closure pour shall not be placed until final deck surface is within the tolerance specified.
4. Thirty-Seven mm holes in neoprene sheets shall be drilled or punched so that the neoprene is not distorted at the time of installation. See "CHANNEL ASSEMBLY DETAILS NO. 2" sheet.
5. For deck plate details see " DECK PLATE DETAILS NO. 1" and " DECK PLATE DETAILS NO. 2" sheets.
6. For mild reinforcement in blockout areas, see "REINFORCEMENT DETAILS" sheet. (Not all mild reinforcement is shown for clarity.
7. For channel assembly details, see "CHANNEL ASSEMBLY DETAILS NO 1" and "CHANNEL ASSEMBLY DETAILS NO 2".
8. Place deck plate, support plate and channel assembly so that full bearing is achieved between i) deck and support plates and ii) deck plate and channel assembly.
9. Self-consolidating concrete shall be used in support plate blockout.
10. Fast setting hydraulic cement concrete shall be used in channel assembly blockout.
11. Catwalk for maintenance crew within seismic gap not shown.
12. Gutter shall be placed on the same side as the support plate, 75 mm minimum from the deck plate, at a 2% slope.
13. Lo is the length of ground deck overlay and is equal to d/(Support ℄ slope - Profile grade).
14. For support plate details see "SUPPORT PLATE DETAILS" sheet.

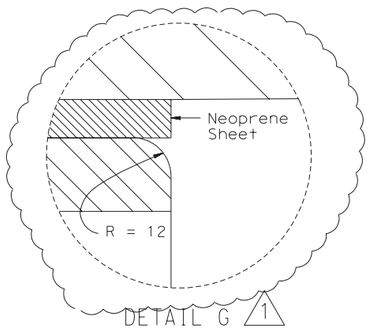

DETAIL G 1
SCALE = 1:1

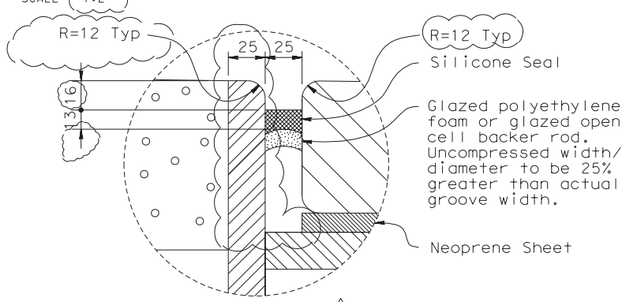

DETAIL H 1
SCALE = 1:2

MARK	DATE	DESCRIPTIONS	BY	CH'D
1	9/15/06	Joint improvements	TD	AK

REVISIONS

CONTRACT CHANGE ORDER NO. 25
SHEET ____ OF ____

THE CONTRACTOR SHALL VERIFY ALL CONTROLLING FIELD DIMENSIONS BEFORE ORDERING OR FABRICATING ANY MATERIAL.

SAN FRANCISCO OAKLAND BAY BRIDGE
EAST SPAN SEISMIC SAFETY PROJECT

SELF-ANCHORED SUSPENSION BRIDGE
(SUPERSTRUCTURE & TOWER)

SEISMIC JOINT (HINGE A)

CROSS SECTION

Caltrans Metric

	BY	CHECKED
DESIGN	E DELIS	A KARTOUM
DETAILS	A R DUDSAK	A KARTOUM
QUANTITIES	E DELIS	A KARTOUM

STATE OF CALIFORNIA
DEPARTMENT OF TRANSPORTATION

DIVISION OF ENGINEERING SERVICES
STRUCTURE DESIGN
SPECIAL DESIGNS BRANCH

BRIDGE NO. 34-0006 L/R
KILOMETER POST 13.2/13.9

ALL DIMENSIONS ARE IN MILLIMETERS UNLESS OTHERWISE SHOWN

ORIGINAL SCALE IN MILLIMETERS FOR REDUCED PLANS 0 10 20 30 40 50 60 70 80 90 100

CU 04
EA 0120F1

DISREGARD PRINTS BEARING EARLIER REVISION DATES

REVISION DATES 1/24/06 8/18/06 10/30/06

SHEET 448R1 OF

FILE => spec_des_br_proj/04-0120F1/$REQUEST

STRUCTURES DESIGN DETAIL SHEET (METRIC) (REV.03-17-04)

TIME PLOTTED => $TIME
DATE PLOTTED => $DATE
USERNAME => $USER

C:\TEMP SAS\zaagp01.dgn 3/30/2007 8:37:45 AM