DIST	COUNTY	ROUTE	KILOMETER POST TOTAL PROJECT	SHEET No	TOTAL SHEETS
04	SF	80	13.2/13.9	865R1	1204

REGISTERED CIVIL ENGINEER DATE

09/15/2006
PLANS APPROVAL DATE

REGISTERED PROFESSIONAL ENGINEER — EFTHYMIOS DELIS — No. 51434 — Exp. 6-30-08 — CIVIL — STATE OF CALIFORNIA

The State of California or its officers or agents shall not be responsible for the accuracy or completeness of electronic copies of this plan sheet.

Caltrans now has a web site! To get to the web site, go to: http://www.dot.ca.gov

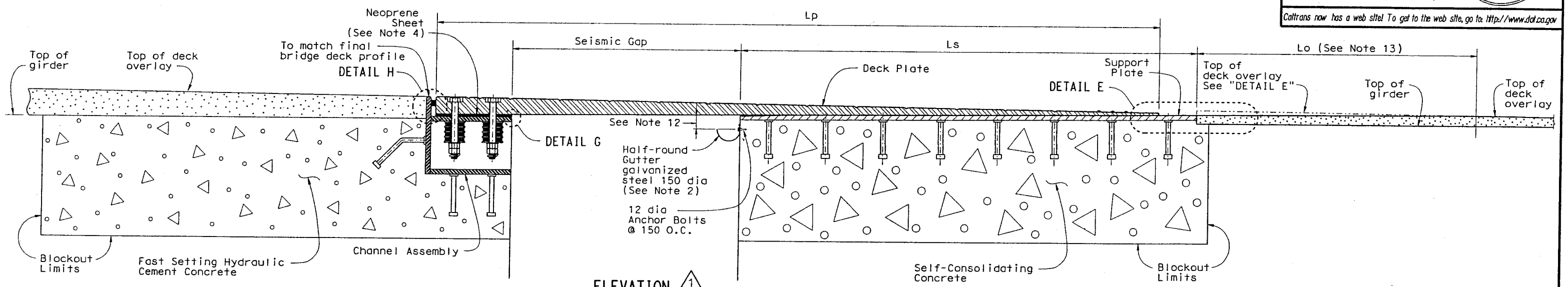

ELEVATION 1
SCALE = 1:10

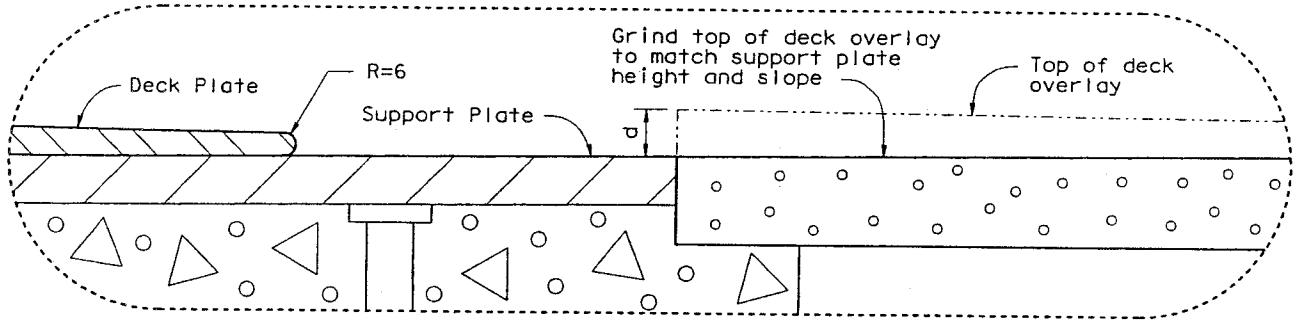

DETAIL E 1
SCALE = 1:2

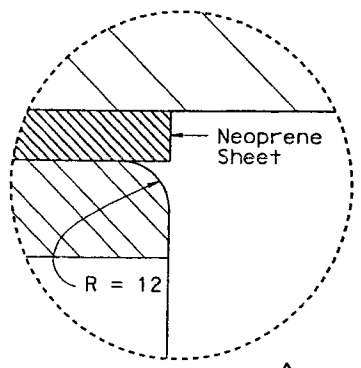

DETAIL G 1
SCALE = 1:1

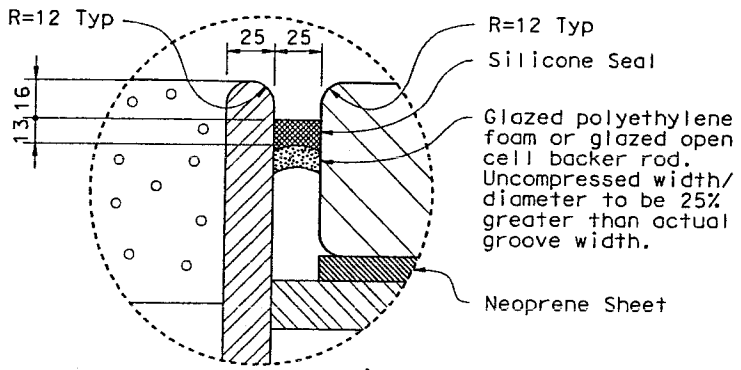

DETAIL H 1
SCALE = 1:2

THE CONTRACTOR SHALL VERIFY ALL CONTROLLING FIELD DIMENSIONS BEFORE ORDERING OR FABRICATING ANY MATERIAL.

JOINT INFORMATION 1			
LOCATION		HINGE AE	HINGE AW
SKEW (°)		0	0
DECK PLATE	Thickness t_d (mm)	90	90
	Length Lp (mm)	3800	3800
SUPPORT PLATE	Thickness t_s (mm)	32	32
	Length Ls (mm)	2400	2400
SEISMIC GAP @ 20°	(mm)	1200	1200
MAXIMUM DECK GRIND	d (mm)	13	24

MARK	DATE	REVISIONS: DESCRIPTIONS	BY	CH'D
1	9/15/06	Joint improvements	TD	AK

CONTRACT CHANGE ORDER NO. 25
SHEET ___ OF ___

NOTES: 1

1. Install Seismic Joint after erecting bike path, placing deck overlay up to the limit of the blockout, utilities and barrier.
2. Use caulking or sealant between gutter and concrete.
3. Seismic Joint to be used in conjunction with closure pour. Closure pour shall not be placed until final deck surface is within the tolerance specified.
4. Thirty-Seven mm holes in neoprene sheets shall be drilled or punched so that the neoprene is not distorted at the time of installation. See "CHANNEL ASSEMBLY DETAILS NO. 2" sheet.
5. For deck plate details see " DECK PLATE DETAILS NO. 1" and " DECK PLATE DETAILS NO. 2" sheets.
6. For mild reinforcement in blockout areas, see "REINFORCRMENT DETAILS" sheet. Not all mild reinforcement is shown for clarity.
7. For channel assembly details, see "CHANNEL ASSEMBLY DETAILS NO 1" and "CHANNEL ASSEMBLY DETAILS NO 2".
8. Place deck plate, support plate and channel assembly so that full bearing is achieved between i) deck and support plates and ii)deck plate and channel assembly.
9. Self-consolidating concrete shall be used in support plate blockout.
10. Fast setting hydraulic cement concrete shall be used in channel assembly blockout.
11. Catwalk for maintenance crew within seismic gap not shown.
12. Gutter shall be placed on the same side as the support plate, 75 mm minimum from the deck plate, at a 2% slope.
13. Lo is the length of ground deck overlay and is equal to d/(Support ℄ slope - Profile grade).
14. For support plate details see "SUPPORT PLATE DETAILS" sheet.

Caltrans Metric

	BY	CHECKED
DESIGN	E DELIS	A KARTOUM
DETAILS	A R DUDSAK	A KARTOUM
QUANTITIES	E DELIS	A KARTOUM

ALL DIMENSIONS ARE IN MILLIMETERS UNLESS OTHERWISE SHOWN

ORIGINAL SCALE IN MILLIMETERS FOR REDUCED PLANS 0 10 20 30 40 50 60 70 80 90 100

STATE OF CALIFORNIA
DEPARTMENT OF TRANSPORTATION

DIVISION OF ENGINEERING SERVICES
STRUCTURE DESIGN
SPECIAL DESIGNS BRANCH

CU 04
EA 0120F1

FILE => spec_des_br_prol/04-0120F1/zaaap01.dan

DISREGARD PRINTS BEARING EARLIER REVISION DATES

BRIDGE NO.	34-0006 L/R
KILOMETER POST	13.2/13.9

SAN FRANCISCO OAKLAND BAY BRIDGE
EAST SPAN SEISMIC SAFETY PROJECT

SELF-ANCHORED SUSPENSION BRIDGE (SUPERSTRUCTURE & TOWER)

SEISMIC JOINT (HINGE A)

CROSS SECTION

REVISION DATES | SHEET 448R1 | OF

STRUCTURES DESIGN DETAIL SHEET (METRIC) (REV. 03-17-04)

USERNAME => tdudsak DATE PLOTTED => 14-SEP-2006 TIME PLOTTED => 13:41

DIST	COUNTY	ROUTE	KILOMETER POST TOTAL PROJECT	SHEET NO.	TOTAL SHEETS
04	SF	80	13.2/13.9	866R1	1204

REGISTERED CIVIL ENGINEER DATE

EFTHYMIOS DELIS
No. 51434
Exp. 6-30-08
CIVIL
REGISTERED PROFESSIONAL ENGINEER
STATE OF CALIFORNIA

09-15-2006
PLANS APPROVAL DATE

The State of California or its officers or agents shall not be responsible for the accuracy or completeness of electronic copies of this plan sheet.

Caltrans now has a web site! To get to the web site, go to: http://www.dot.ca.gov

INDEX TO PLANS ⚠1

SHEET NO.	TITLE
865R1	CROSS SECTION
866R1	INDEX TO PLANS
867R1	DECK PLATE DETAILS NO. 1
868R1	DECK PLATE DETAILS NO. 2
869R1	CHANNEL ASSEMBLY DETAILS NO. 1
870R1	CHANNEL ASSEMBLY DETAILS NO. 2
871R1	SUPPORT PLATE DETAILS
872R1	REINFORCEMENT DETAILS
872S1	CONSTRUCTION SEQUENCE

GENERAL NOTES LOAD FACTOR DESIGN ⚠1

DESIGN:

Bridge Design Specifications (2000 LFD, AASHTO with Interims and revisions by Caltrans)

LIVE LOADING:

HS20-44, Alternative Military and Permit Design loads impact: 75%

STRUCTURAL STEEL:

ASTM A709/A709M Grade 50 [345] unless noted otherwise.

BOLTS:

ASTM A449 galvanized unless noted otherwise.

WELDING:

All structural steel plate interface connections shall be made with continuous complete joint penetration (CJP) welds unless noted otherwise.

SEISMIC LOADING:

STRUCTURAL CONCRETE:

Mild Steel Reinforcement (ASTM A706) f_y =415 MPa, f_u =738 MPa

⚠1	9/15/06	Sheet numbering/Legend	TD	AK
MARK	DATE	DESCRIPTIONS	BY	CH'D
		REVISIONS		

CONTRACT CHANGE ORDER NO. 25
SHEET ___ OF ___

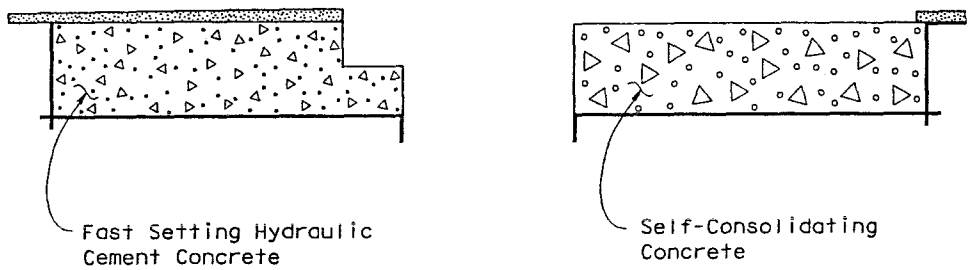

LEGEND ⚠1

Epoxy AC Overlay

Fast Setting Hydraulic Cement Concrete (FSHCC)
(f'_{ci}= 14 MPa @ 3 hours
f'_c = 35 MPa @ 56 days)

Self-Consolidating Concrete (SCC) Bridge
(f'_c= 35 MPa @ 56 days)

THE CONTRACTOR SHALL VERIFY ALL CONTROLLING FIELD DIMENSIONS BEFORE ORDERING OR FABRICATING ANY MATERIAL.

DESIGN	BY E DEUS	CHECKED A KARTOUM	STATE OF CALIFORNIA DEPARTMENT OF TRANSPORTATION	DIVISION OF ENGINEERING SERVICES STRUCTURE DESIGN	BRIDGE NO. 34-0006 L/R
DETAILS	BY A R DUDSAK	CHECKED A KARTOUM		SPECIAL DESIGNS BRANCH	KILOMETER POST 13.2/13.9
QUANTITIES	BY E DEUS	CHECKED A KARTOUM		CU 04 EA 0120F1	

Caltrans Metric

ALL DIMENSIONS ARE IN MILLIMETERS UNLESS OTHERWISE SHOWN

ORIGINAL SCALE IN MILLIMETERS FOR REDUCED PLANS 0 10 20 30 40 50 60 70 80 90 100

DISREGARD PRINTS BEARING EARLIER REVISION DATES →

REVISION DATES

SHEET 449R1 OF

FILE => spec_des_br_proj/04-0120F1/zgiip02.dgn

STRUCTURES DESIGN DETAIL SHEET (METRIC) (REV 03-13-06)

SAN FRANCISCO OAKLAND BAY BRIDGE
EAST SPAN SEISMIC SAFETY PROJECT

SELF-ANCHORED SUSPENSION BRIDGE
(SUPERSTRUCTURE & TOWER)

SEISMIC JOINT (HINGE A)

INDEX TO PLANS

USERNAME => fdudsak DATE PLOTTED => 14-SEP-2006 TIME PLOTTED => 13:01

DIST	COUNTY	ROUTE	KILOMETER POST TOTAL PROJECT	SHEET No	TOTAL SHEETS
04	SF	80	13.2/13.9	867R1	1204

REGISTERED CIVIL ENGINEER DATE

09/15/2006
PLANS APPROVAL DATE

REGISTERED PROFESSIONAL ENGINEER
EFTHYMIOS DELIS
No. 51434
Exp. 6-30-08
CIVIL
STATE OF CALIFORNIA

The State of California or its officers or agents shall not be responsible for the accuracy or completeness of electronic copies of this plan sheet.

Caltrans now has a web site! To get to the web site, go to: http://www.dot.ca.gov

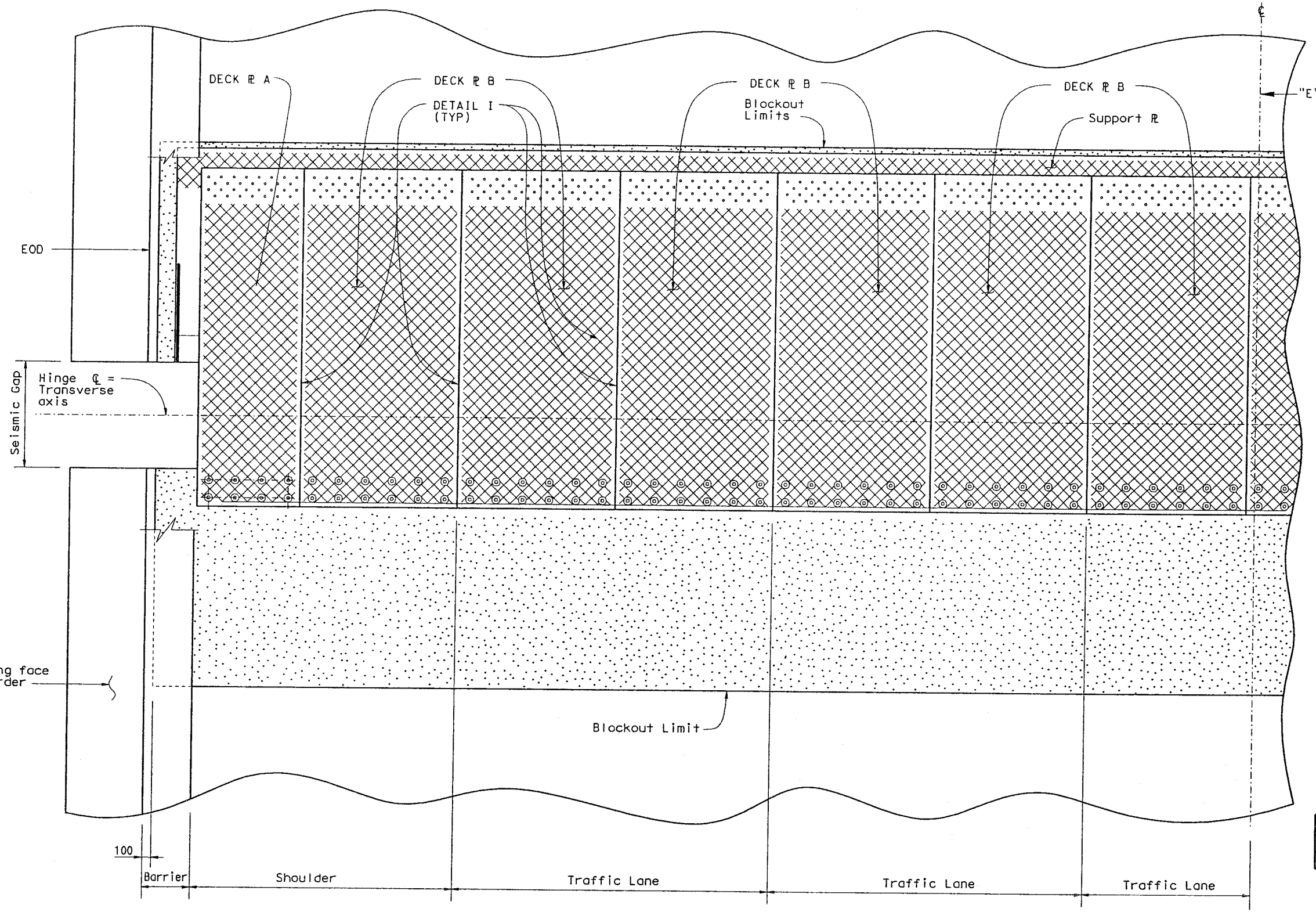

EXPANSION JOINT (HALF) PLAN ⚠1

SCALE 1:25

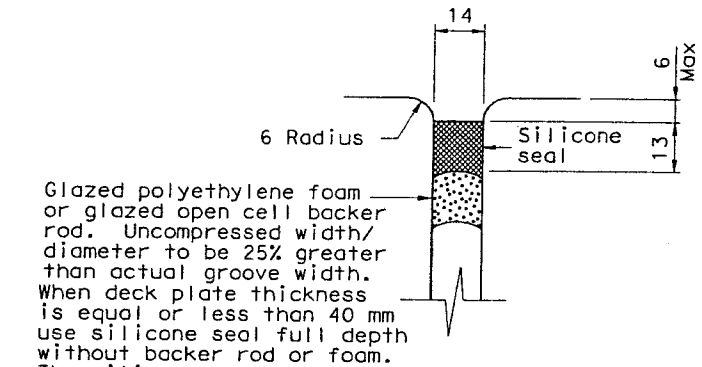

DETAIL I ⚠1

SCALE = 1:1

NOTES: ⚠1

1. For Plates A and B see "DECK PLATE DETAILS NO 2" sheet.
2. Denotes deck Steel Plate with V-grooves at ±45°.
3. Deck Plate A matches with Support Plate A and the Channel Assembly A (Module A) Likewise for Module B. Channel assemblies are 14 wider than their corresponding deck plates.
4. One module "B" is placed per half traffic lane.
5. Portions of barriers are not shown for clarity.

MARK	DATE	REVISIONS	BY	CH'D
⚠1	9/15/06	Steel ℞s & Seal changes	TD	AK

CONTRACT CHANGE ORDER NO. 25
SHEET ___ OF ___

THE CONTRACTOR SHALL VERIFY ALL CONTROLLING FIELD DIMENSIONS BEFORE ORDERING OR FABRICATING ANY MATERIAL.

SAN FRANCISCO OAKLAND BAY BRIDGE
EAST SPAN SEISMIC SAFETY PROJECT

SELF-ANCHORED SUSPENSION BRIDGE
(SUPERSTRUCTURE & TOWER)

SEISMIC JOINT (HINGE A)

DECK PLATE DETAILS NO 1

Caltrans Metric

	BY	CHECKED
DESIGN	E DELIS	A KARTOUM
DETAILS	A R DUDSAK	A KARTOUM
QUANTITIES	E DELIS	A KARTOUM

STATE OF CALIFORNIA
DEPARTMENT OF TRANSPORTATION

DIVISION OF ENGINEERING SERVICES
STRUCTURE DESIGN
SPECIAL DESIGNS BRANCH

BRIDGE NO. 34-0006 L/R
KILOMETER POST 13.2/13.9

ALL DIMENSIONS ARE IN MILLIMETERS UNLESS OTHERWISE SHOWN

ORIGINAL SCALE IN MILLIMETERS FOR REDUCED PLANS 0 10 20 30 40 50 60 70 80 90 100

CU 04
EA 0120F1

DISREGARD PRINTS BEARING EARLIER REVISION DATES →

REVISION DATES

SHEET 450R1 OF

IFILE => spec_des_br_proj/04-0120F1/zakisb03.dgn

USERNAME => tdudsak DATE PLOTTED => 14-SEP-2006 TIME PLOTTED => 13:42

STRUCTURES DESIGN DETAIL SHEET (METRIC) (REV 02-12-04)

DIST	COUNTY	ROUTE	KILOMETER POST TOTAL PROJECT	SHEET No	TOTAL SHEETS
04	SF	80	13.2/13.9	868R1	1204

REGISTERED CIVIL ENGINEER DATE

09/15/2006
PLANS APPROVAL DATE

REGISTERED PROFESSIONAL ENGINEER — EFTHYMIOS DELIS — No. 51434 — Exp. 6-30-08 — CIVIL — STATE OF CALIFORNIA

The State of California or its officers or agents shall not be responsible for the accuracy or completeness of electronic copies of this plan sheet.

Caltrans now has a web site! To get to the web site, go to: http://www.dot.ca.gov

MARK	DATE	REVISIONS	BY	CH'D
1	9/15/06	Deck ℄ changes	TD	AK

CONTRACT CHANGE ORDER NO. 25
SHEET ___ OF ___

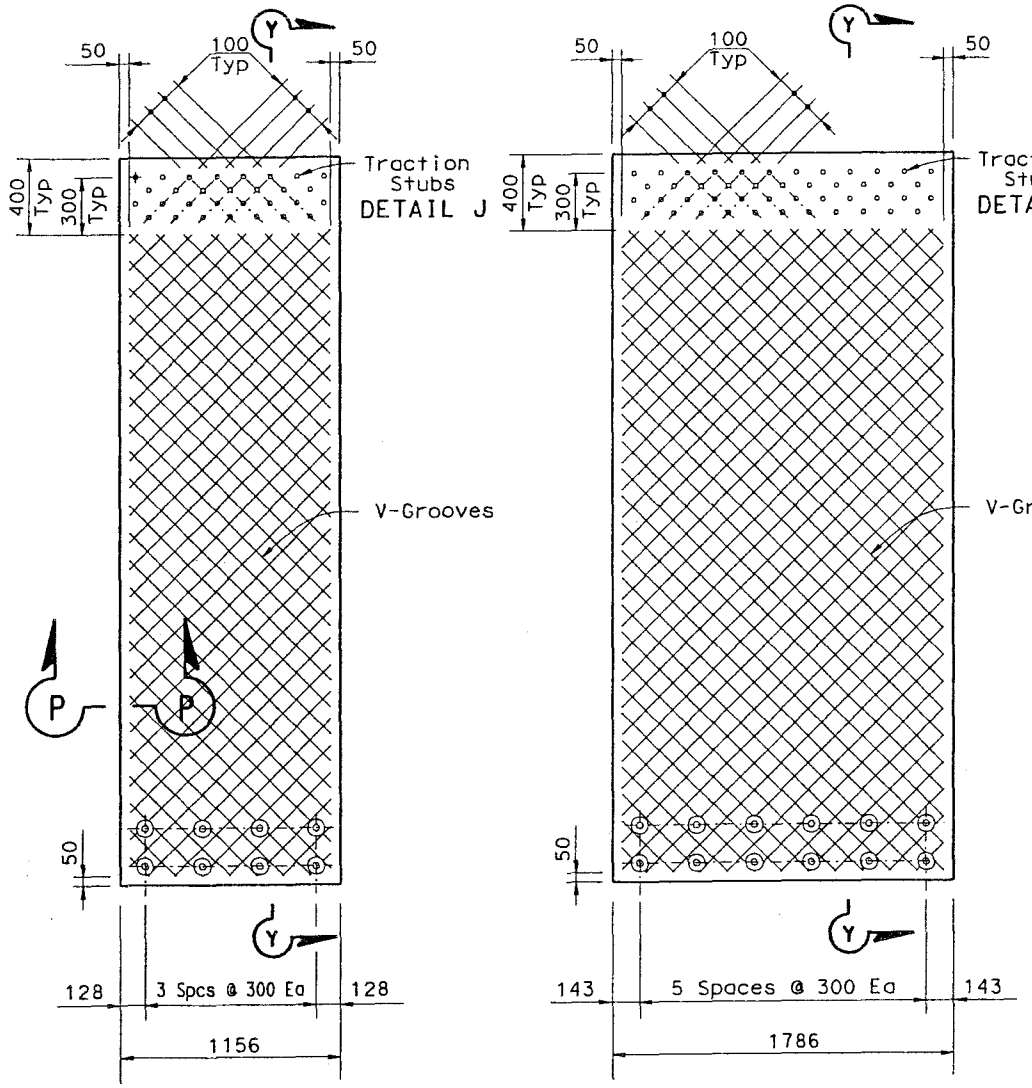

DECK PLATE A 1
SCALE = 1:20

DECK PLATE B 1
SCALE = 1:20

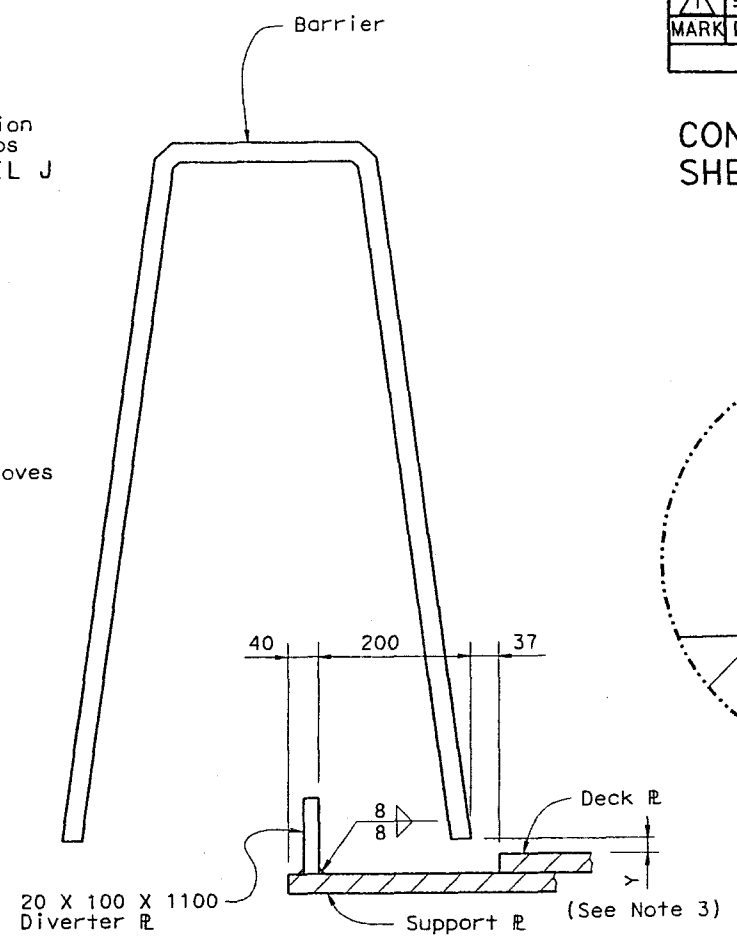

SECTION P-P 1
SCALE = 1:5

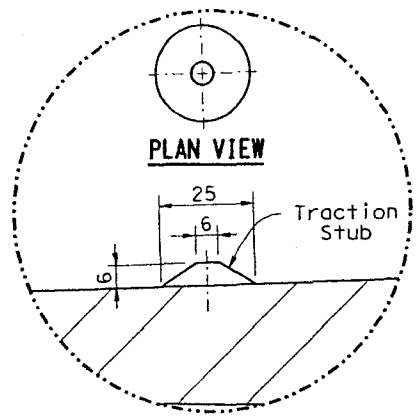

DETAIL J 1
SCALE = 1:1

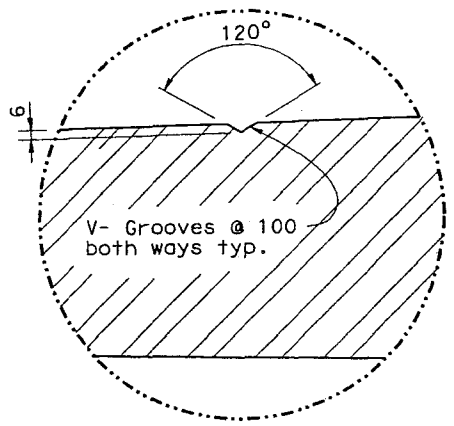

DETAIL K 1
SCALE = 1:2.5

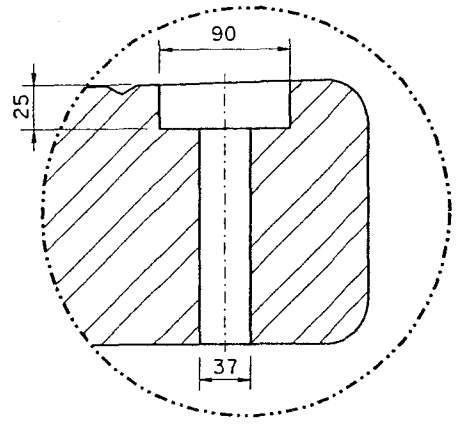

DETAIL L 1
SCALE = 1:2.5

DETAIL J

NOTES: 1

1. V-Groove pattern is similar for all Plates
2. For deck plate plan see "DECK PLATE DETAILS NO 1" sheet.
3. In Section P-P, Y may vary from 10 mm (min) to 20 mm (max).
4. Traction stubs to be machined.
5. For td value see "CROSS SECTION" sheet.

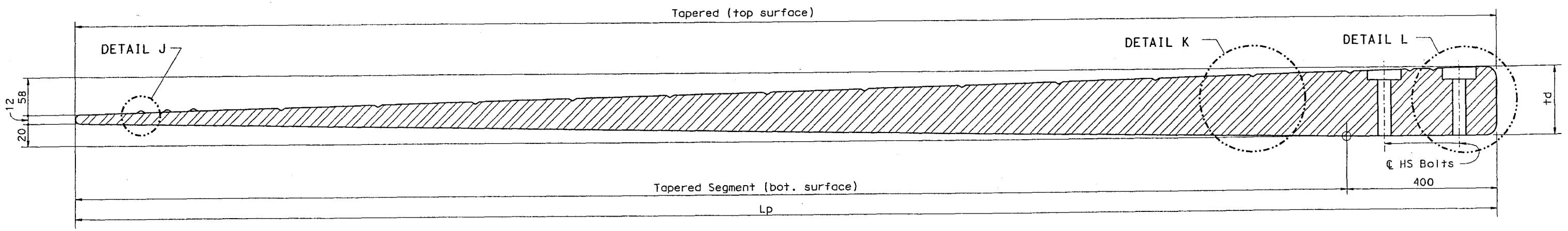

SECTION Y-Y 1
NO SCALE

THE CONTRACTOR SHALL VERIFY ALL CONTROLLING FIELD DIMENSIONS BEFORE ORDERING OR FABRICATING ANY MATERIAL.

DESIGN	BY E DELIS	CHECKED A KARTOUM	
DETAILS	BY A R DUDSAK	CHECKED A KARTOUM	
QUANTITIES	BY E DELIS	CHECKED A KARTOUM	

Caltrans Metric

ALL DIMENSIONS ARE IN MILLIMETERS UNLESS OTHERWISE SHOWN

ORIGINAL SCALE IN MILLIMETERS FOR REDUCED PLANS 0 10 20 30 40 50 60 70 80 90 100

STATE OF CALIFORNIA
DEPARTMENT OF TRANSPORTATION

DIVISION OF ENGINEERING SERVICES
STRUCTURE DESIGN
SPECIAL DESIGNS BRANCH

CU 04
EA 0120F1

FILE => spec_des_br_proj/04-0120F1/zakisb04.dgn

BRIDGE NO. 34-0006 L/R
KILOMETER POST 13.2/13.9

DISREGARD PRINTS BEARING EARLIER REVISION DATES →

REVISION DATES

SAN FRANCISCO OAKLAND BAY BRIDGE
EAST SPAN SEISMIC SAFETY PROJECT

SELF-ANCHORED SUSPENSION BRIDGE
(SUPERSTRUCTURE & TOWER)

SEISMIC JOINT (HINGE A)

DECK PLATE DETAILS NO 2

SHEET 451R1 OF

STRUCTURES DESIGN DETAIL SHEET (METRIC) (REV.03-17-04)

USERNAME => tdudsak DATE PLOTTED => 14-SEP-2006 TIME PLOTTED => 13:48

DIST	COUNTY	ROUTE	KILOMETER POST TOTAL PROJECT	SHEET No	TOTAL SHEETS
04	SF	80	13.2/13.9	869R1	1204

REGISTERED CIVIL ENGINEER DATE

09/15/2006
PLANS APPROVAL DATE

REGISTERED PROFESSIONAL ENGINEER — EFTHYMIOS DELIS — No. 51434 — Exp. 6-30-08 — CIVIL — STATE OF CALIFORNIA

The State of California or its officers or agents shall not be responsible for the accuracy or completeness of electronic copies of this plan sheet.

Caltrans now has a web site! To get to the web site, go to: http://www.dot.ca.gov

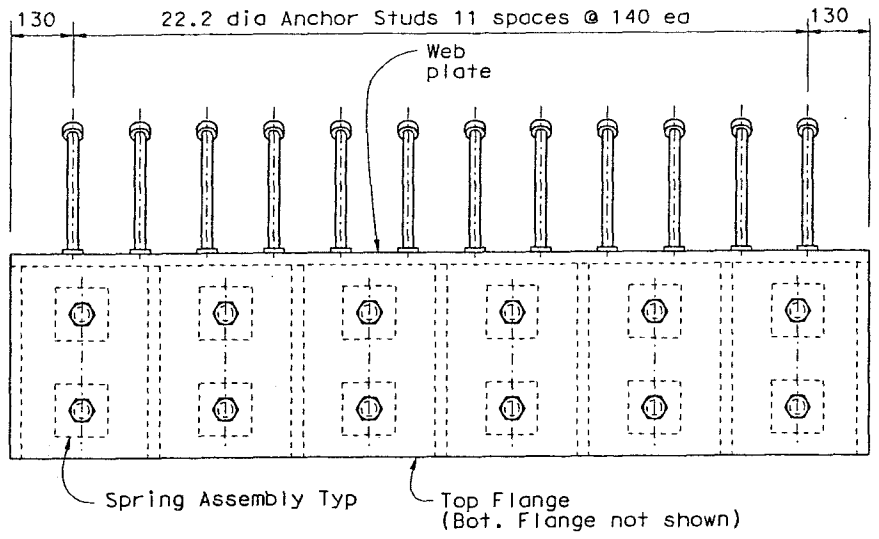

PLAN - BUILT UP CHANNEL ASSEMBLY "B" (TYP) 1

NO SCALE

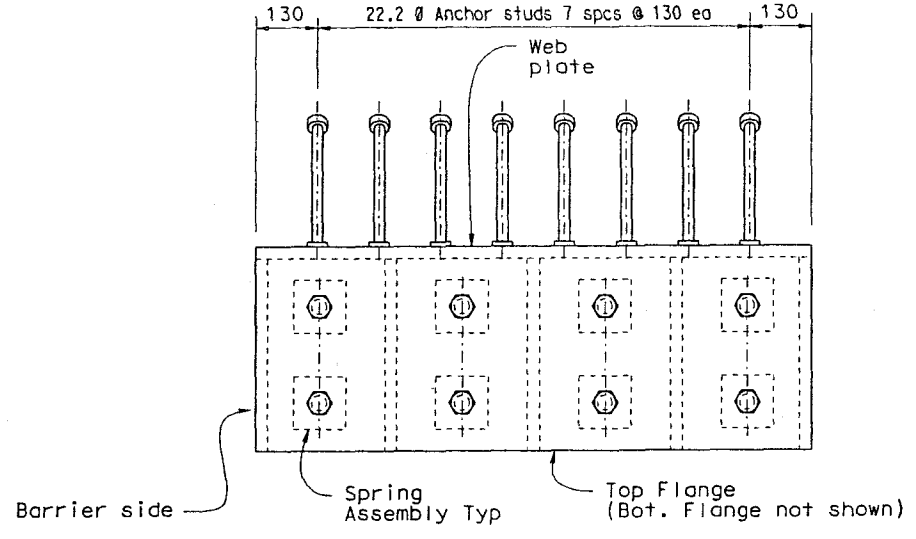

PLAN - BUILT UP CHANNEL ASSEMBLY "A" (TYP) 1

NO SCALE

NOTE:

For SECTIONS F-F and G-G See "CHANNEL ASSEMBLY DETAILS NO. 2" sheet

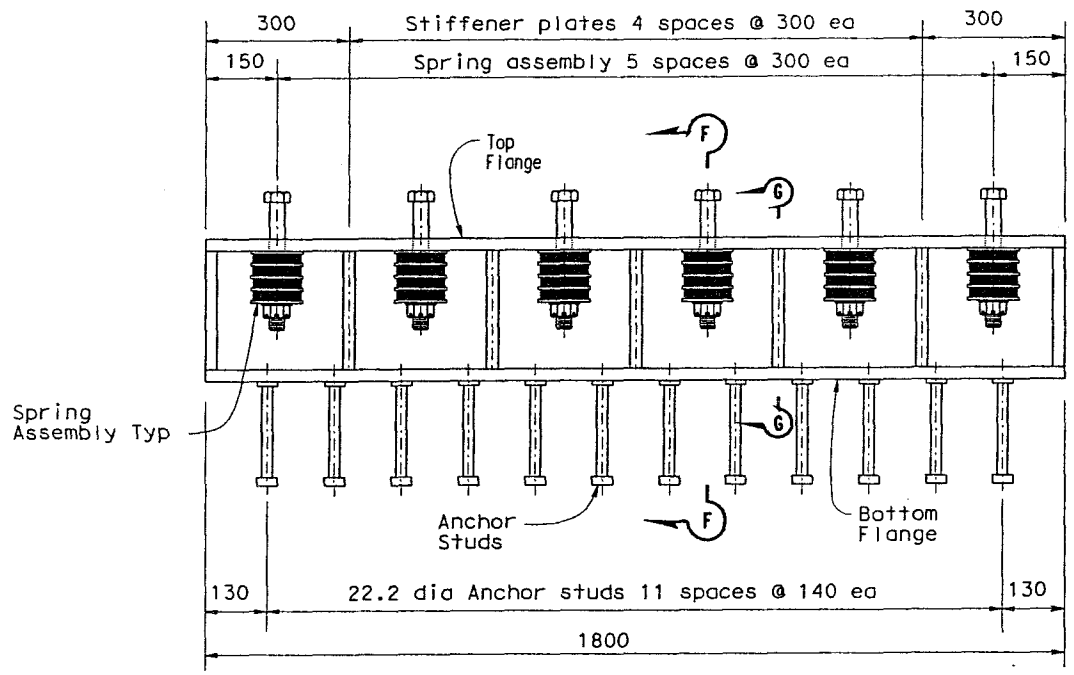

ELEVATION - BUILT UP CHANNEL ASSEMBLY "B" (TYP) 1

NO SCALE

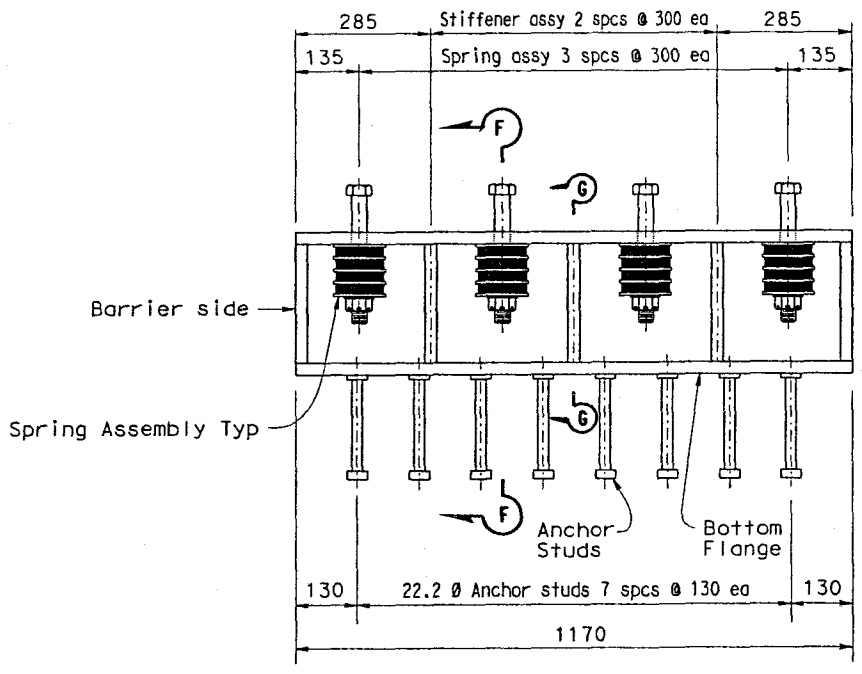

ELEVATION - BUILT UP CHANNEL ASSEMBLY "A" (TYP) 1

NO SCALE

MARK	DATE	DESCRIPTIONS	BY	CH'D
1	9/15/06	Channel improvements	TD	AK
		REVISIONS		

CONTRACT CHANGE ORDER NO. 25
SHEET ___ OF ___

THE CONTRACTOR SHALL VERIFY ALL CONTROLLING FIELD DIMENSIONS BEFORE ORDERING OR FABRICATING ANY MATERIAL.

DESIGN	BY E DELIS	CHECKED A KARTOUM	
DETAILS	BY A R DUDSAK	CHECKED A KARTOUM	
QUANTITIES	BY E DELIS	CHECKED A KARTOUM	

Caltrans Metric

ALL DIMENSIONS ARE IN MILLIMETERS UNLESS OTHERWISE SHOWN

ORIGINAL SCALE IN MILLIMETERS FOR REDUCED PLANS 0 10 20 30 40 50 60 70 80 90 100

STATE OF CALIFORNIA
DEPARTMENT OF TRANSPORTATION

DIVISION OF ENGINEERING SERVICES
STRUCTURE DESIGN
SPECIAL DESIGNS BRANCH

CU 04
EA 0120F1

FILE => spec_des_br_proj/04-0120F1/zakisb05.dgn

BRIDGE NO. 34-0006 L/R
KILOMETER POST 13.2/13.9

DISREGARD PRINTS BEARING EARLIER REVISION DATES →

REVISION DATES

SHEET 452R1 OF

STRUCTURES DESIGN DETAIL SHEET (METRIC) (REV. 03-17-04)

SAN FRANCISCO OAKLAND BAY BRIDGE
EAST SPAN SEISMIC SAFETY PROJECT

SELF-ANCHORED SUSPENSION BRIDGE
(SUPERSTRUCTURE & TOWER)

SEISMIC JOINT (HINGE A)

CHANNEL ASSEMBLY DETAILS NO 1

USERNAME => tdudsak DATE PLOTTED => 14-SEP-2006 TIME PLOTTED => 13:49

DIST	COUNTY	ROUTE	KILOMETER POST TOTAL PROJECT	SHEET No	TOTAL SHEETS
04	SF	80	13.2/13.9	870R1	1204

REGISTERED CIVIL ENGINEER DATE

09/15/2006
PLANS APPROVAL DATE

REGISTERED PROFESSIONAL ENGINEER
EFTHYMIOS DELIS
No. 51434
Exp. 6-30-08
CIVIL
STATE OF CALIFORNIA

The State of California or its officers or agents shall not be responsible for the accuracy or completeness of electronic copies of this plan sheet.

Caltrans now has a web site! To get to the web site, go to: http://www.dot.ca.gov

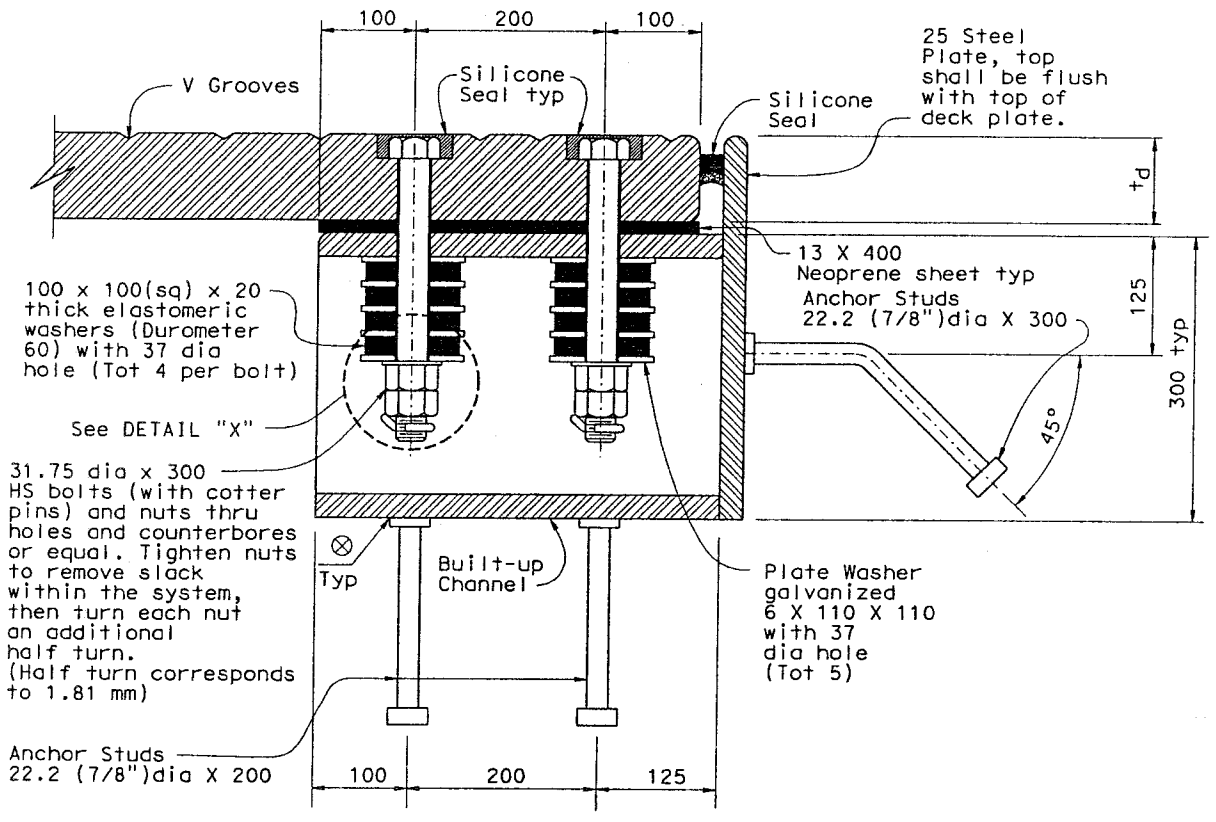

SECTION F-F 1

NO SCALE

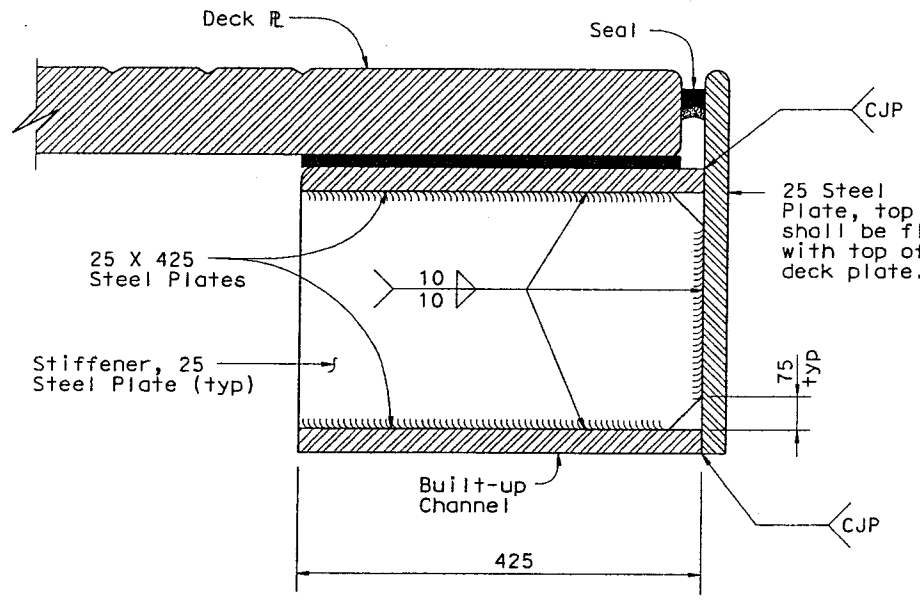

SECTION G-G 1

NO SCALE

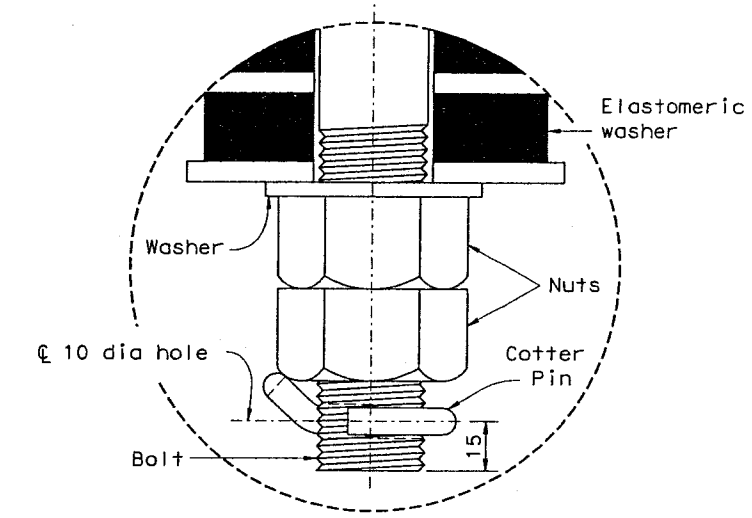

DETAIL X 1

NO SCALE

NOTE:

1. For td value see "CROSS SECTION" sheet.

MARK	DATE	DESCRIPTIONS	BY	CH'D
1	9/15/06	Channel improvements	TD	AK

REVISIONS

CONTRACT CHANGE ORDER NO. 25
SHEET ___ OF ___

THE CONTRACTOR SHALL VERIFY ALL CONTROLLING FIELD DIMENSIONS BEFORE ORDERING OR FABRICATING ANY MATERIAL.

SAN FRANCISCO OAKLAND BAY BRIDGE
EAST SPAN SEISMIC SAFETY PROJECT

SELF-ANCHORED SUSPENSION BRIDGE
(SUPERSTRUCTURE & TOWER)

SEISMIC JOINT (HINGE A)

CHANNEL ASSEMBLY DETAILS NO 2

Caltrans Metric

	BY	CHECKED
DESIGN	E DELIS	A KARTOUM
DETAILS	A R DUDSAK	A KARTOUM
QUANTITIES	E DELIS	A KARTOUM

STATE OF CALIFORNIA
DEPARTMENT OF TRANSPORTATION

DIVISION OF ENGINEERING SERVICES
STRUCTURE DESIGN
SPECIAL DESIGNS BRANCH

BRIDGE NO. 34-0006 L/R
KILOMETER POST 13.2/13.9

ALL DIMENSIONS ARE IN MILLIMETERS UNLESS OTHERWISE SHOWN

ORIGINAL SCALE IN MILLIMETERS FOR REDUCED PLANS 0 10 20 30 40 50 60 70 80 90 100

CU 04
EA 0120F1

DISREGARD PRINTS BEARING EARLIER REVISION DATES

REVISION DATES

SHEET 453R1 OF

FILE => spec_des_br_proj/04-0120F1/zakisb06.dgn

STRUCTURES DESIGN DETAIL SHEET (METRIC) (REV.03-17-04)

USERNAME => tdudsak DATE PLOTTED => 14-SEP-2006 TIME PLOTTED => 13:49

DIST	COUNTY	ROUTE	KILOMETER POST TOTAL PROJECT	SHEET No	TOTAL SHEETS
04	SF	80	13.2/13.9	871R1	1204

REGISTERED CIVIL ENGINEER DATE

09-15-2006
PLANS APPROVAL DATE

REGISTERED PROFESSIONAL ENGINEER
EFTHYMIOS DELIS
No. 51434
Exp. 6-30-08
CIVIL
STATE OF CALIFORNIA

The State of California or its officers or agents shall not be responsible for the accuracy or completeness of electronic copies of this plan sheet.

Caltrans now has a web site! To get to the web site, go to: http://www.dot.ca.gov

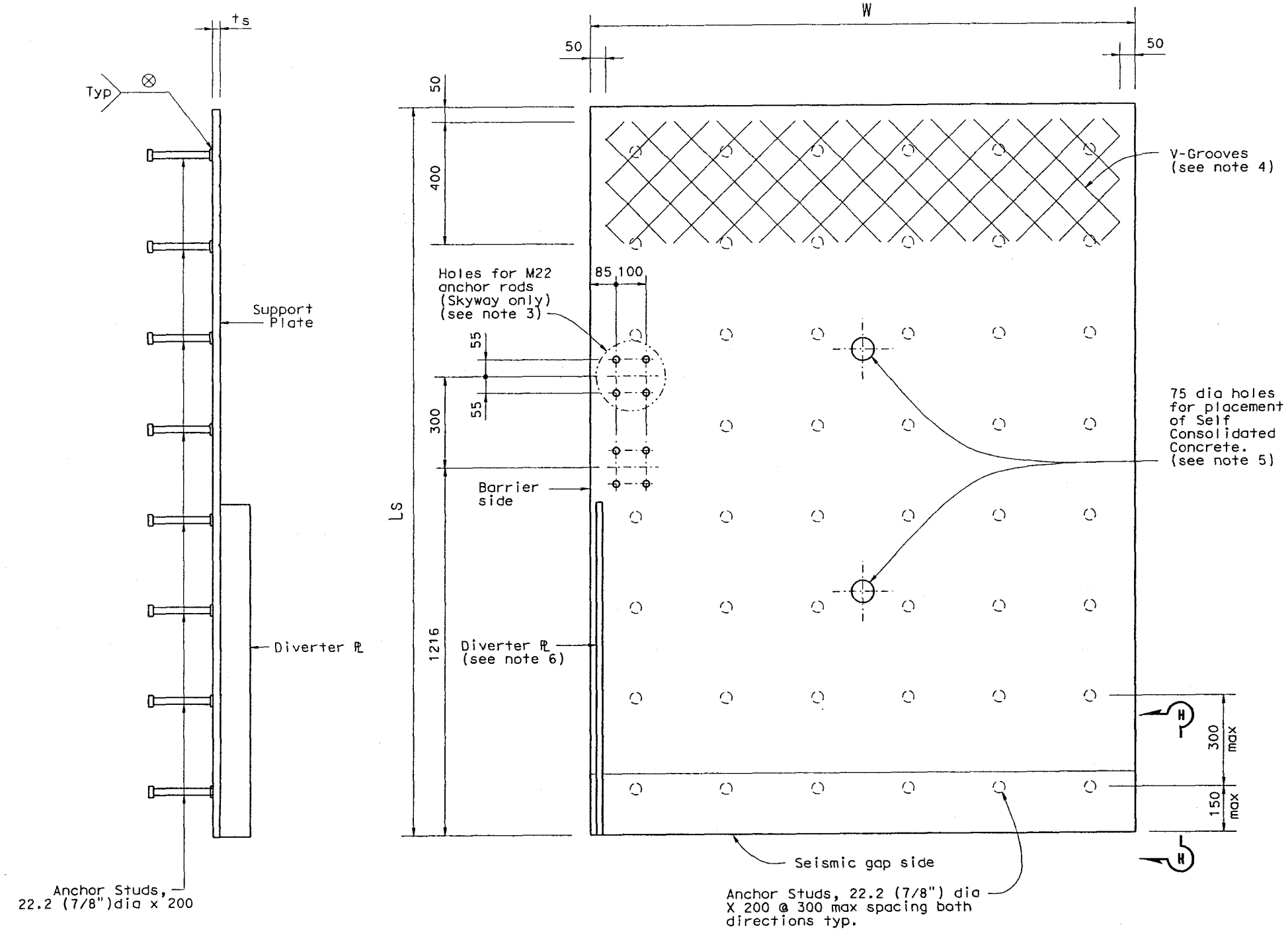

SIDE VIEW
NO SCALE

PLAN VIEW
NO SCALE

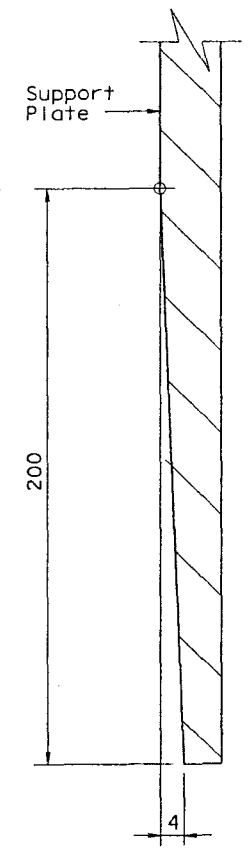

VIEW H-H 1
NO SCALE

SUPPORT PLATE DETAILS 1

MARK	DATE	DESCRIPTIONS	BY	CH'D
1	9/15/06	Support PL improvements	TD	AK
REVISIONS				

CONTRACT CHANGE ORDER NO. 25
SHEET ___ OF ___

SUPPORT PLATE WIDTH
MODULE A; W = 1170
MODULE B; W = 1800

1

NOTES: 1

1. For Ls and ts values see "CROSS SECTION" sheet.
2. Support Plate A shown, Support Plate B similar.
3. Install anchor rod holes in support plate Module A at barrier side only of Self-Anchored Suspension Bridge and Skyway Structure as indicated. Coordinate anchor rod holes to align with those in the barrier.
4. For V-Groove details see "DECK PLATE DETAILS NO 2" sheet.
5. Exact location of 75 dia holes to be determined prior to support plate fabrication.
6. For diverter plate details see "DECK PLATE DETAILS NO 2" sheet.
7. The area of the support plate with V-Grooves is to receive a nonskid surface in accordance with the Special Provisions. Nonskid surface area extends for the full width of the plate and for 450 mm at the end of plate. Nonskid surface in this region is to consist of epoxy only without grit.

THE CONTRACTOR SHALL VERIFY ALL CONTROLLING FIELD DIMENSIONS BEFORE ORDERING OR FABRICATING ANY MATERIAL.

DESIGN	BY E DEUS	CHECKED A KARTOUM	STATE OF CALIFORNIA DEPARTMENT OF TRANSPORTATION
DETAILS	BY A R DUDSAK	CHECKED A KARTOUM	DIVISION OF ENGINEERING SERVICES STRUCTURE DESIGN
QUANTITIES	BY E DEUS	CHECKED A KARTOUM	SPECIAL DESIGNS BRANCH

Caltrans Metric

ALL DIMENSIONS ARE IN MILLIMETERS UNLESS OTHERWISE SHOWN

ORIGINAL SCALE IN MILLIMETERS FOR REDUCED PLANS 0 10 20 30 40 50 60 70 80 90 100

CU 04
EA 0120F1

BRIDGE NO.	34-0006 L/R
KILOMETER POST	13.2/13.9

DISREGARD PRINTS BEARING EARLIER REVISION DATES →

REVISION DATES

SHEET 454R1 OF

SAN FRANCISCO OAKLAND BAY BRIDGE
EAST SPAN SEISMIC SAFETY PROJECT

SELF-ANCHORED SUSPENSION BRIDGE
(SUPERSTRUCTURE & TOWER)

SEISMIC JOINT (HINGE A)

SUPPORT PLATE DETAILS

FILE => spec des br proj/04-0120F1/zokisb07.dgn

STRUCTURES DESIGN DETAIL SHEET (METRIC) (REV 03-17-06)

USERNAME => tdudsak DATE PLOTTED => 14-SEP-2006 TIME PLOTTED => 13:50

DIST	COUNTY	ROUTE	KILOMETER POST TOTAL PROJECT	SHEET NO	TOTAL SHEETS
04	SF	80	13.2/13.9	872R1	1204

REGISTERED CIVIL ENGINEER DATE

09-15-2006
PLANS APPROVAL DATE

REGISTERED PROFESSIONAL ENGINEER
EFTHYMIOS DELIS
No. 51434
Exp. 6-30-08
CIVIL
STATE OF CALIFORNIA

The State of California or its officers or agents shall not be responsible for the accuracy or completeness of electronic copies of this plan sheet.

Caltrans now has a web site! To get to the web site, go to: http://www.dot.ca.gov

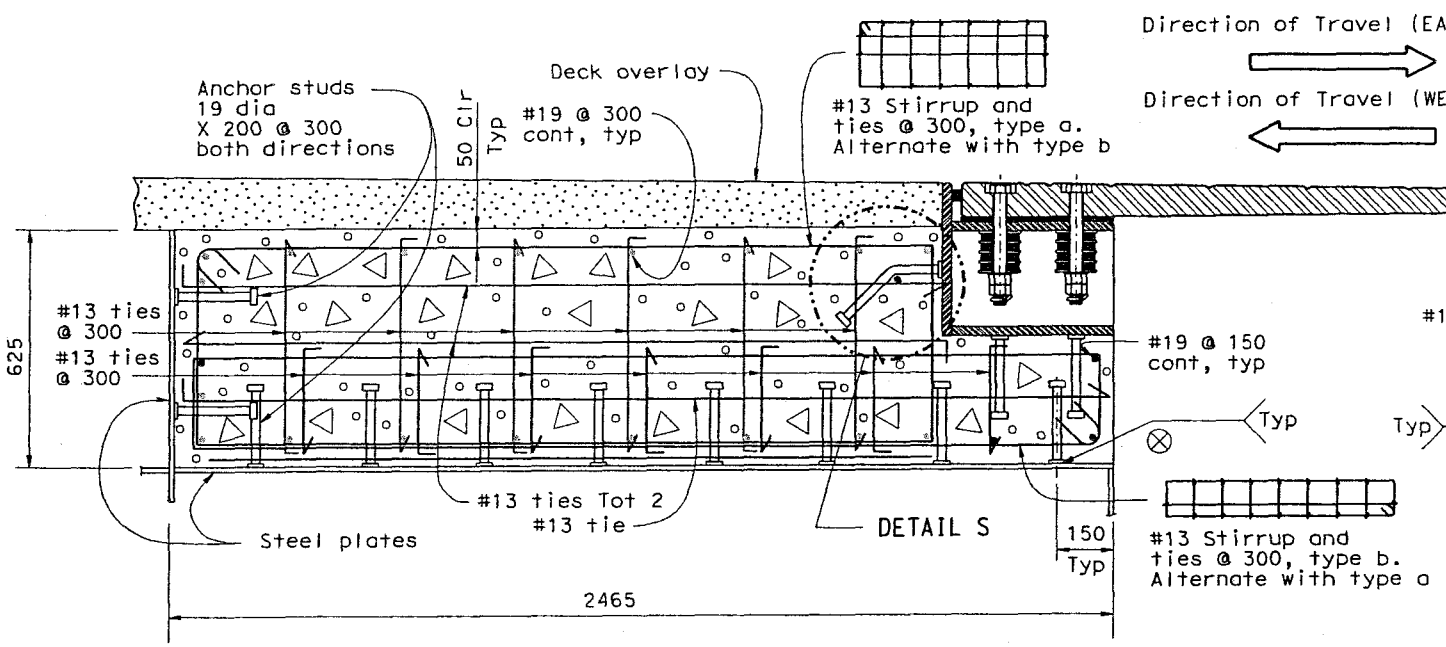

SAS SIDE

SKYWAY SIDE

ELEVATION 1
SCALE 1:10

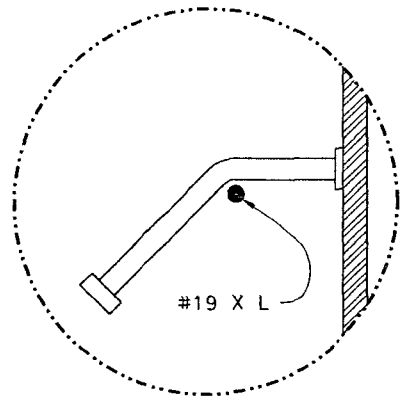

DETAIL S 1

L= 1170 Module A
1800 Module B

MARK	DATE	REVISIONS	BY	CH'D
1	9/15/06	Block out details	TD	AK

CONTRACT CHANGE ORDER NO. 25
SHEET ___ OF ___

THE CONTRACTOR SHALL VERIFY ALL CONTROLLING FIELD DIMENSIONS BEFORE ORDERING OR FABRICATING ANY MATERIAL.

Caltrans Metric

	BY	CHECKED
DESIGN	E DEUS	A KARTOUM
DETAILS	A R DUDSAK	A KARTOUM
QUANTITIES	E DEUS	A KARTOUM

ALL DIMENSIONS ARE IN MILLIMETERS UNLESS OTHERWISE SHOWN

ORIGINAL SCALE IN MILLIMETERS FOR REDUCED PLANS 0 10 20 30 40 50 60 70 80 90 100

STATE OF CALIFORNIA
DEPARTMENT OF TRANSPORTATION

DIVISION OF ENGINEERING SERVICES
STRUCTURE DESIGN
SPECIAL DESIGNS BRANCH

CU 04
EA 0120F1

FILE => spec des br droj/04-0120F1/zakisb08.dgn

BRIDGE NO. 34-0006 L/R
KILOMETER POST 13.2/13.9

DISREGARD PRINTS BEARING EARLIER REVISION DATES

SAN FRANCISCO OAKLAND BAY BRIDGE
EAST SPAN SEISMIC SAFETY PROJECT

SELF-ANCHORED SUSPENSION BRIDGE
(SUPERSTRUCTURE & TOWER)

SEISMIC JOINT (HINGE A)

REINFORCEMENT DETAILS

REVISION DATES

SHEET 455R1 OF

STRUCTURES DESIGN DETAIL SHEET (METRIC) (REV 03-17-04)

USERNAME => tdudsak DATE PLOTTED => 14-SEP-2006 TIME PLOTTED => 13:50

DIST	COUNTY	ROUTE	KILOMETER POST TOTAL PROJECT	SHEET No	TOTAL SHEETS
04	SF	80	13.2/13.9	872S1	1204

REGISTERED CIVIL ENGINEER DATE

09/15/2006
PLANS APPROVAL DATE

REGISTERED PROFESSIONAL ENGINEER — EFTHYMIOS DELIS — No. 51434 — Exp. 6-30-08 — CIVIL — STATE OF CALIFORNIA

The State of California or its officers or agents shall not be responsible for the accuracy or completeness of electronic copies of this plan sheet.

Caltrans now has a web site! To get to the web site, go to: http://www.dot.ca.gov

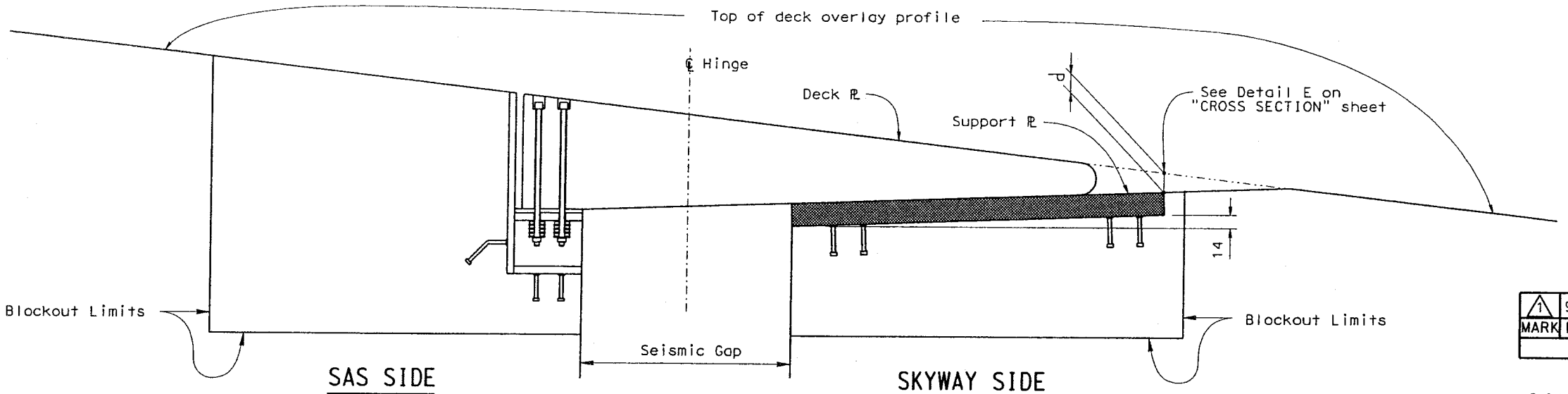

INSTALLATION DETAIL
NO SCALE

MARK	DATE	DESCRIPTIONS	BY	CH'D
1	9/15/06	Construction sequence	TD	AK
		REVISIONS		

CONTRACT CHANGE ORDER NO. 25
SHEET ___ OF ___

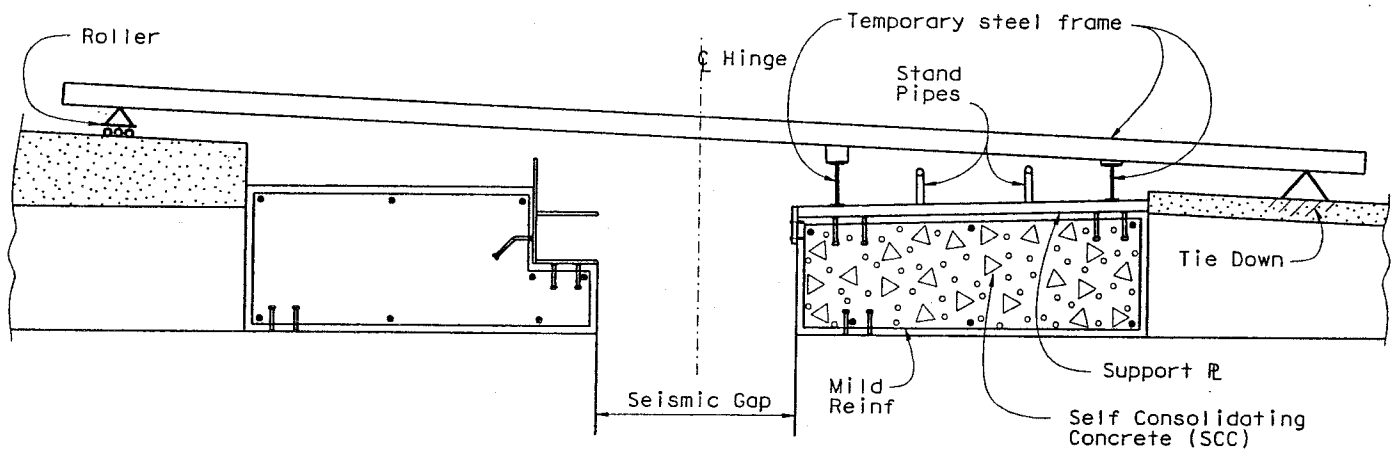

STEP 1
NO SCALE

- Place anchor studs and mild reinforcement in blockout areas.
- Install temporary steel frame.
- For each joint module, place support plate at elevations and locations shown on plans.
- Align all joint modules together and secure them.
- Pour self consolidating concrete (SCC) below support plate.
- Let SCC set and reach 14 MPa strength min.
- Remove stand pipes and clean top surface of support plates.

SCHEMATIC CONSTRUCTION SEQUENCE 1
NO SCALE

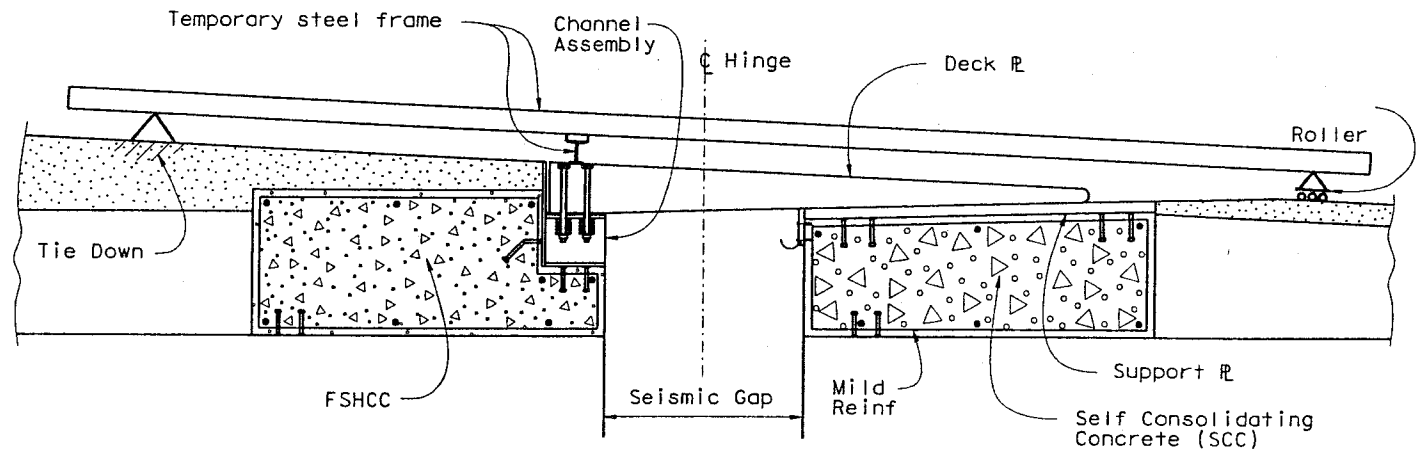

STEP 2
NO SCALE

- Steel frame supports are changed so frame is tied down on channel assembly side and is free to move on support plate side.
- For each joint module, place channel assembly and deck plate at elevations and locations shown on plans. Channel assembly sits suspended from steel frame. Deck plate sits on support plate and channel assembly. Make adjustments so full bearing between deck and support plates is achieved.
- Align all joint modules together and secure them.
- Pour Fast Setting Hydraulic Cement Concrete (FSHCC) in the channel assembly blockout area.
- Let FSHCC set for at least 3 hours minimum.
- Tighten bolts and place cotter pins.
- Install gutter.
- Place deck overlay.
- Seal joint with silicone seal.

NOTES:

1. Not all reinforcement and joint details are shown for clarity.

THE CONTRACTOR SHALL VERIFY ALL CONTROLLING FIELD DIMENSIONS BEFORE ORDERING OR FABRICATING ANY MATERIAL.

	BY	CHECKED
DESIGN	E DELIS	A KARTOUM
DETAILS	A R DUDSAK	A KARTOUM
QUANTITIES	E DELIS	A KARTOUM

STATE OF CALIFORNIA
DEPARTMENT OF TRANSPORTATION

DIVISION OF ENGINEERING SERVICES
STRUCTURE DESIGN
SPECIAL DESIGNS BRANCH

BRIDGE NO. 34-0006 L/R
KILOMETER POST 13.2/13.9

SAN FRANCISCO OAKLAND BAY BRIDGE
EAST SPAN SEISMIC SAFETY PROJECT
SELF-ANCHORED SUSPENSION BRIDGE (SUPERSTRUCTURE & TOWER)
SEISMIC JOINT (HINGE A)
CONSTRUCTION SEQUENCE

ALL DIMENSIONS ARE IN MILLIMETERS UNLESS OTHERWISE SHOWN

ORIGINAL SCALE IN MILLIMETERS FOR REDUCED PLANS 0 10 20 30 40 50 60 70 80 90 100

CU 04
EA 0120F1

DISREGARD PRINTS BEARING EARLIER REVISION DATES →

REVISION DATES

SHEET 455S1 OF

FILE => spec des br proj/04-0120F1/zakisb09.dgn

STRUCTURES DESIGN DETAIL SHEET (METRIC) (REV. 03-17-04)

USERNAME => tdudsak DATE PLOTTED => 14-SEP-2006 TIME PLOTTED => 13:51