DIST.	COUNTY	ROUTE	KILOMETER POST TOTAL PROJECT	SHEET NO.	TOTAL SHEETS
04	SF	80	13.2/13.9	864S2R2	1204

REGISTERED ENGINEER - CIVIL

07-30-10

PLANS APPROVAL DATE

The State of California or its officers or agents shall not be responsible for the accuracy or completeness of electronic copies of this plan sheet.

REGISTERED PROFESSIONAL ENGINEER Marwan N. Nader No. C 054426 Exp. 12/31/11 CIVIL STATE OF CALIFORNIA

T.Y. LIN / MOFFATT & NICHOL
825 BATTERY STREET
SAN FRANCISCO, CA 94111

Caltrans now has a web site! To get to the web site, go to: http://www.dot.ca.gov

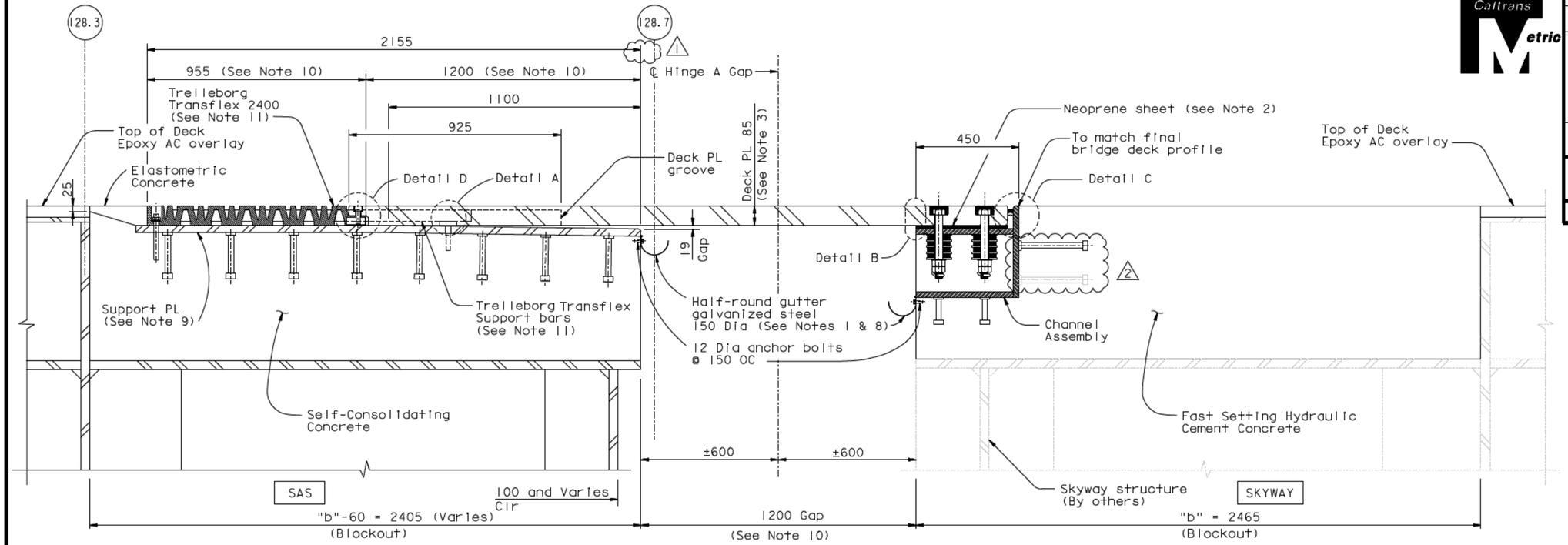

SECTION A-A

1:10

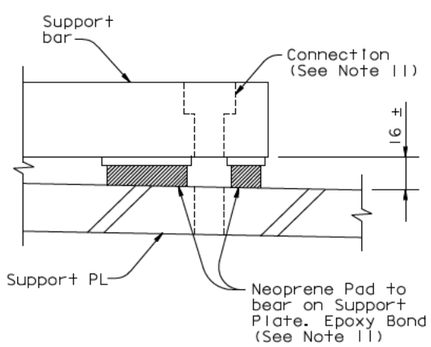

DETAIL A

1:2

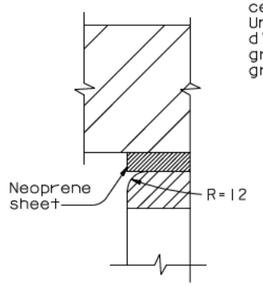

DETAIL B

1:2

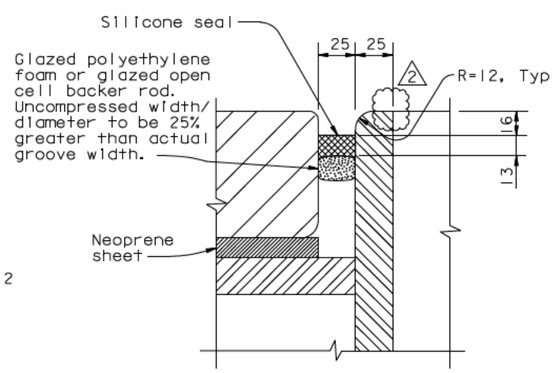

DETAIL C

1:2

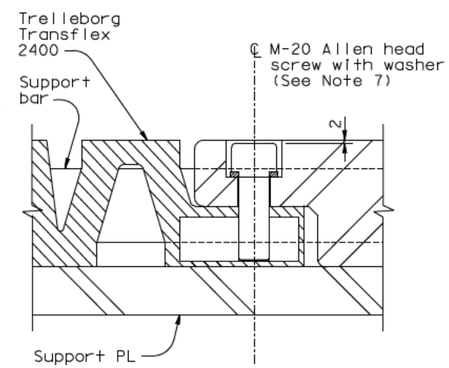

DETAIL D

1:2

NOTES:

1. Use caulking or sealant between gutter and concrete.
2. 40 mm holes in neoprene sheets shall be drilled or punched so that the neoprene is not distorted at the time of installation. See "Hinge A Expansion Joint Details No.8" sheet.
3. For deck plate layout and details, see "Hinge A Expansion Joint Details No.3" sheet. For deck plate friction groove pattern, see "Hinge A Expansion Joint Details No. 6" sheet.
4. For mild steel reinforcement in blockout areas, see "Hinge A Expansion Joint Details No.10" sheet.
5. For channel assembly details, see "Hinge A Expansion Joint Details No.7" and "Hinge A Expansion Joint Details No.8" sheets.
6. Place deck plate, support plate and channel assembly so that full bearing is achieved between 1) deck plate and channel assembly and 11) deck plate and support plates as shown in Section A-A.
7. M-20 Allen head screw shall be stainless steel.
8. Gutter shall be placed on the same side as the support plate, 75 mm minimum from the deck plate. Gutter shall be parallel to deck cross slope.
9. For support plate details see "Hinge A Expansion Joint Details No.9" sheet.
10. Values are for mean temperature of 20° C.
11. All the connection hardware shall be supplied with Trelleborg Transflex 2400. The connection of Transflex 2400 and that of the support bar to the blockout concrete shall be drill and bond dowels.

CONTRACT CHANGE ORDER NO. ____
SHEET ____ OF ____

REQUESTS FOR INFORMATION NOT ADDRESSED IN THIS CCO REMAIN IN FORCE

MARK	DATE	DESCRIPTIONS	BY	CH'D	CCO#
2	12/30/10	SEISMIC JOINT MODIFICATIONS HINGE A	CR	MN	25
1	10/22/10	SEISMIC JOINT MODIFICATIONS HINGE A	CR	MN	25
0	07/30/10	SEISMIC JOINT MODIFICATIONS HINGE A	CR	MN	25

REVISIONS

R. Valizadeh/V. Toan/Y.L./W.L./F.C.
DESIGN OVERSIGHT
SIGN OFF DATE 12/30/10

	BY	CHECKED
DESIGN	C. Redfield	M. Nader
DETAILS	H. Patel	M. Benolt
QUANTITIES	H. Patel	J. Duxbury

PREPARED FOR THE STATE OF CALIFORNIA DEPARTMENT OF TRANSPORTATION

R. Manzanarez
PROJECT ENGINEER

ALL DIMENSIONS ARE IN MILLIMETERS UNLESS OTHERWISE SHOWN

BRIDGE NO. 34-0006L/R
KILOMETER POST 13.2/13.9

SAN FRANCISCO OAKLAND BAY BRIDGE
EAST SPAN SEISMIC SAFETY PROJECT
SELF-ANCHORED SUSPENSION BRIDGE
(SUPERSTRUCTURE & TOWER)

HINGE A EXPANSION JOINT DETAILS NO. 4

Rev. Date: 5-18-98

ORIGINAL SCALE IN MILLIMETERS FOR REDUCED PLANS 0 10 20 30 40 50 60 70 80 90 100

CU 04
EA 0120F1

DISREGARD PRINTS BEARING EARLIER REVISION DATES 07/30/10

REVISION DATES (PRELIMINARY STAGE ONLY)

SHEET 447S2R2 OF

FILE -> I:\bb\04-012001\sas\contract plans and cco\cco\cco#25\7-revision 12-30-10\dgn\akjnt01b.dgn

100 % PS&E

USERNAME -> DWinrow DATE PLOTTED -> 30 DEC 2010 TIME PLOTTED -> 13:20:53

DIST.	COUNTY	ROUTE	KILOMETER POST TOTAL PROJECT	SHEET NO.	TOTAL SHEETS
04	SF	80	13.2/13.9	864S3R1	1204

REGISTERED ENGINEER - CIVIL

07-30-10

PLANS APPROVAL DATE

The State of California or its officers or agents shall not be responsible for the accuracy or completeness of electronic copies of this plan sheet.

REGISTERED PROFESSIONAL ENGINEER Marwan N. Nader No. C 054426 Exp. 12/31/11 CIVIL STATE OF CALIFORNIA

T.Y. LIN / MOFFATT & NICHOL
825 BATTERY STREET
SAN FRANCISCO, CA 94111

Caltrans now has a web site! To get to the web site, go to: http://www.dot.ca.gov

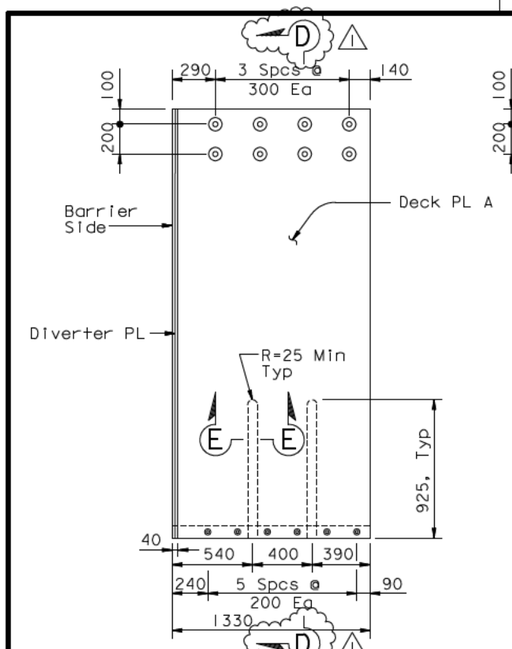

DECK PLATE A
1:20

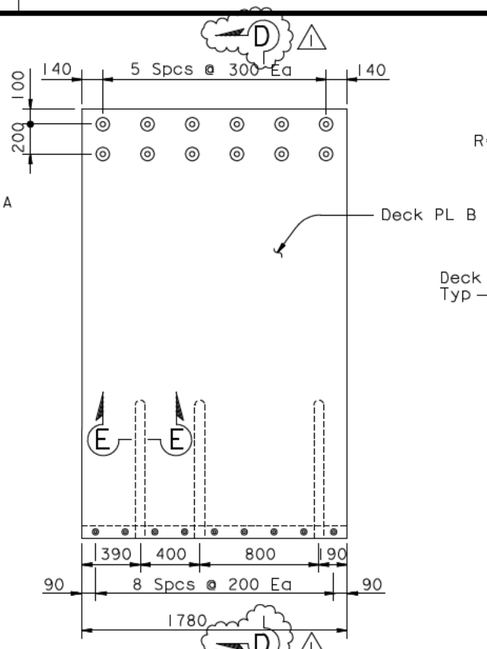

DECK PLATE B
1:20

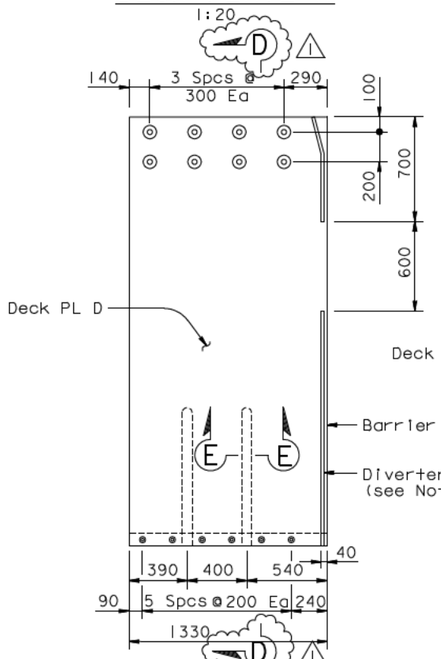

DECK PLATE D
1:20

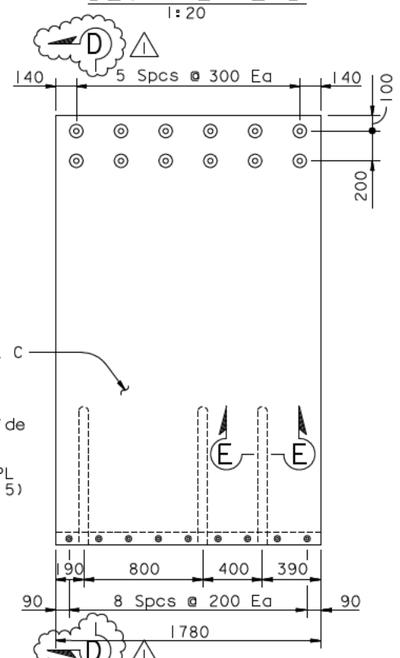

DECK PLATE C
1:20

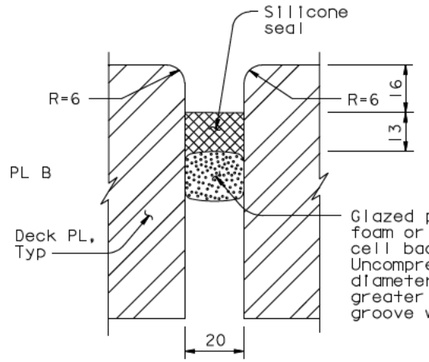

SECTION C-C
1:1

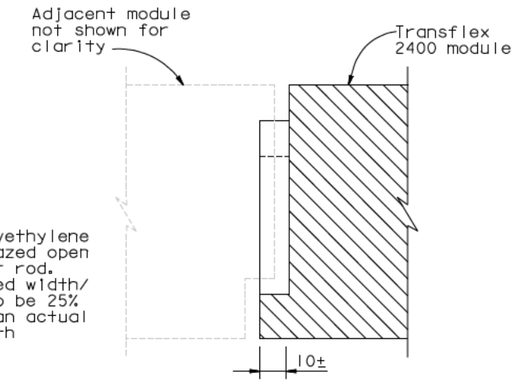

SECTION C'-C'
1:1

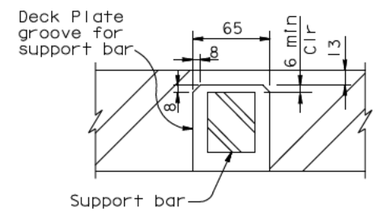

SECTION E-E
1:2.5

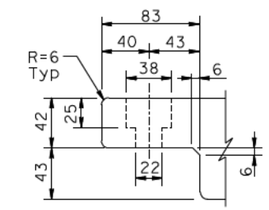

DETAIL E
1:2.5

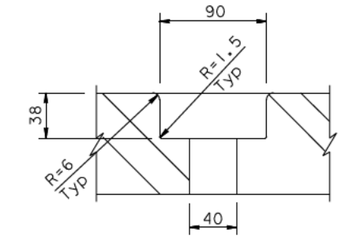

DETAIL F
1:2.5

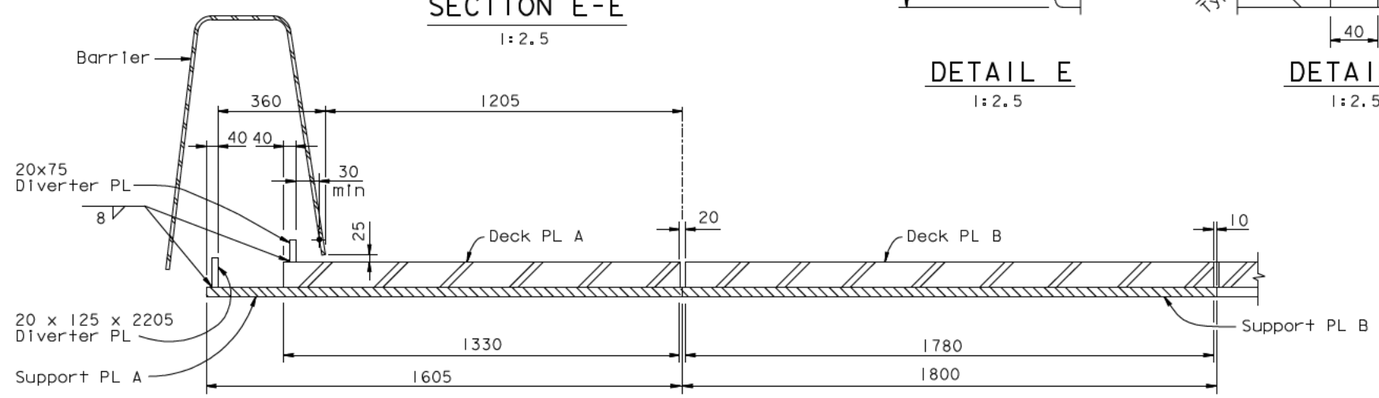

SECTION B-B
1:10

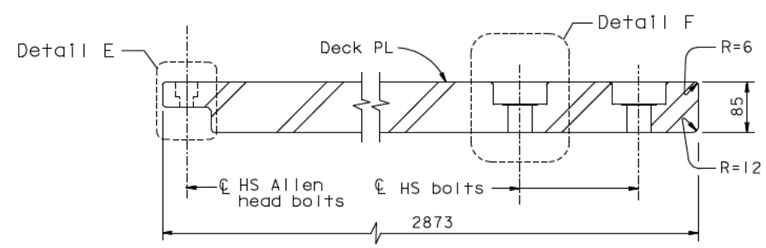

SECTION D-D
1:5

NOTES:

1. For deck plate plan see "Hinge A Expansion Joint Details No.3" sheet.
2. Diverter plate applies to Deck plates A and D and Support plate A only.
3. For bolting of deck plates to channel assembly details, see "Hinge A Expansion Joint Details No. 8" sheet.
4. For connection detail between Trelleborg Transflex 2400 and deck plate see, "Hinge A Expansion Joint Details No. 4" sheet.
5. For diverter plate detail on Deck PL D, see Detail L on "Hinge A Expansion Joint Details No.8" sheet.

CONTRACT CHANGE ORDER NO. ____
SHEET ____ OF ____

REQUESTS FOR INFORMATION NOT ADDRESSED IN THIS CCO REMAIN IN FORCE

ALL DIMENSIONS ARE IN MILLIMETERS UNLESS OTHERWISE SHOWN

R. Valizadeh/V. Toan/Y.L./W.L./F.C.
DESIGN OVERSIGHT
SIGN OFF DATE 12/30/10

MARK	DATE	DESCRIPTIONS	BY	CH'D	CCO#
1	12/30/10	SEISMIC JOINT MODIFICATIONS HINGE A	CR	MN	25
0	07/30/10	SEISMIC JOINT MODIFICATIONS HINGE A	CR	MN	25

REVISIONS

	BY	CHECKED
DESIGN	C. Redfield	M. Nader
DETAILS	H. Patel	M. Benolt
QUANTITIES	H. Patel	J. Duxbury

PREPARED FOR THE STATE OF CALIFORNIA DEPARTMENT OF TRANSPORTATION

R. Manzanarez
PROJECT ENGINEER

BRIDGE NO. 34-0006L/R
KILOMETER POST 13.2/13.9

SAN FRANCISCO OAKLAND BAY BRIDGE
EAST SPAN SEISMIC SAFETY PROJECT
SELF-ANCHORED SUSPENSION BRIDGE
(SUPERSTRUCTURE & TOWER)

HINGE A EXPANSION JOINT DETAILS NO.5

Rev. Date: 5-18-98

ORIGINAL SCALE IN MILLIMETERS FOR REDUCED PLANS 0 10 20 30 40 50 60 70 80 90 100

CU 04
EA 0120F1

DISREGARD PRINTS BEARING EARLIER REVISION DATES 07/30/10

REVISION DATES (PRELIMINARY STAGE ONLY)

SHEET 447S3R1 OF

FILE => I:\bb\04-01200I\sas\contract plans and cco\cco\cco#25\7-revision 12-30-10\dgn\akjnt01c.dgn

USERNAME => DWinrow DATE PLOTTED => 30 DEC 2010 TIME PLOTTED => 13:21:49

100 % PS&E

DIST	COUNTY	ROUTE	KILOMETER POST TOTAL PROJECT	SHEET No	TOTAL SHEETS
04	SF	80	13.2/13.9	864S4R1	1204

REGISTERED CIVIL ENGINEER DATE

07-30-10
PLANS APPROVAL DATE

REGISTERED PROFESSIONAL ENGINEER Enrico G. Maggenti No. 46920 Exp. 6/30/11 CIVIL STATE OF CALIFORNIA

The State of California or its officers or agents shall not be responsible for the accuracy or completeness of electronic copies of this plan sheet.

Caltrans now has a web site! To get to the web site, go to: http://www.dot.ca.gov

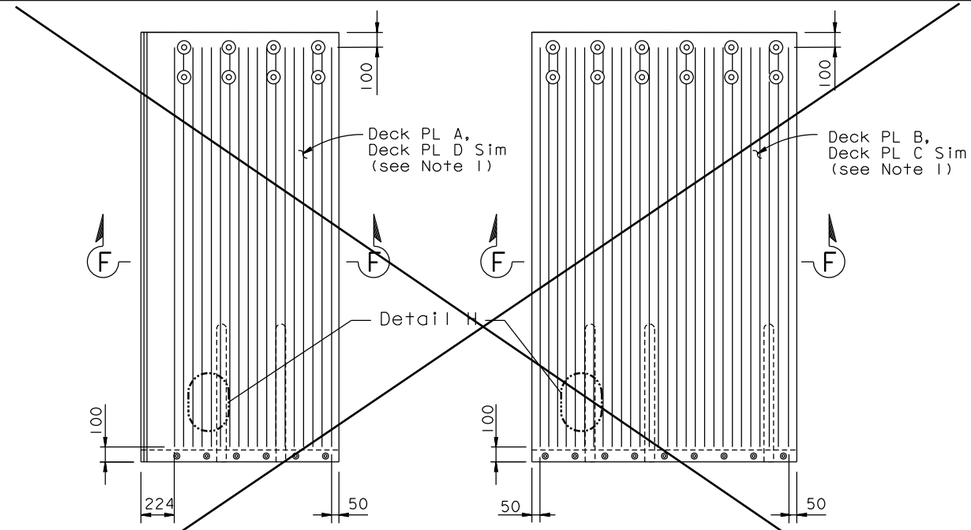

DECK PLATE A/D
(Deck PL A Shown, Deck PL D Similar)

DECK PLATE B/C
(Deck PL B Shown, Deck PL C Similar)

FRICTION PATTERN (See Note 2) 1
1:20

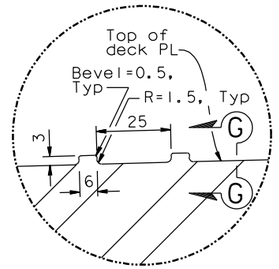

DETAIL G
1:1

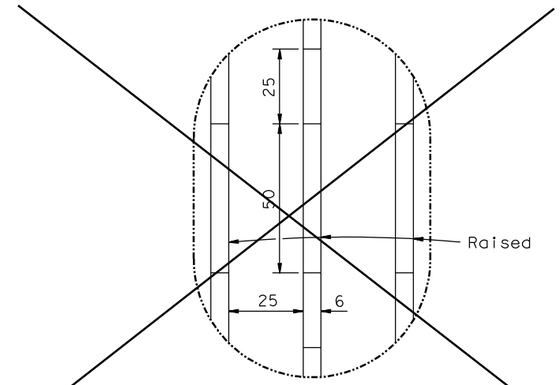

DETAIL H
1:1

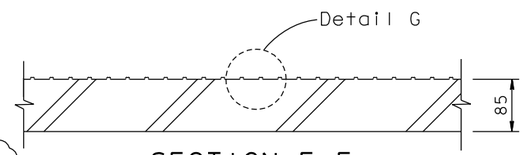

SECTION F-F
1:5

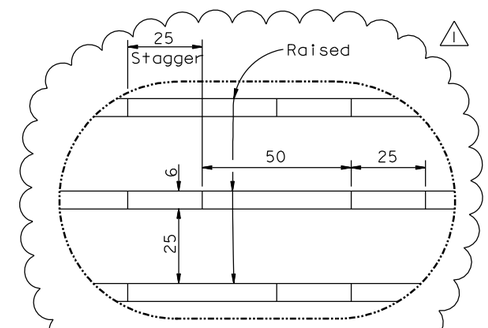

DETAIL H'
1:1

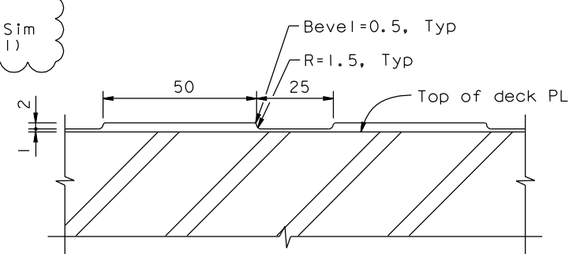

SECTION G-G
1:1

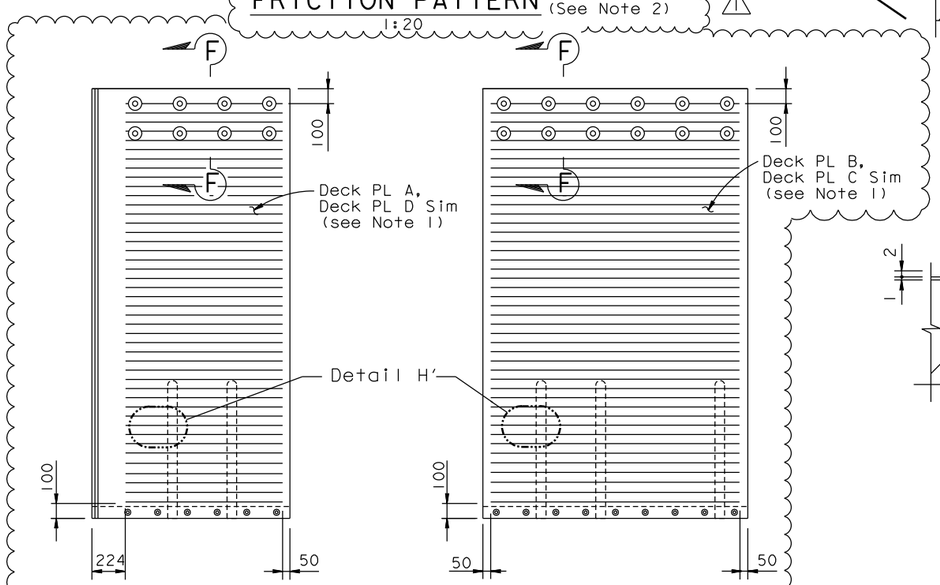

DECK PLATE A/D
(Deck PL A Shown, Deck PL D Similar)

DECK PLATE B/C
(Deck PL B Shown, Deck PL C Similar)

ALT FRICTION PATTERN (See Note 2) 1
1:20

NOTES:

1. For Details not shown, see "Hinge A Expansion Joint Details No.5" sheet.
2. Friction pattern type shall be selected as directed by the Engineer. Polymer/Aggregate Skid Coat (PASC) may be applied per Engineer's direction. (1)

CONTRACT CHANGE ORDER NO. ____
SHEET ___ OF ___

REQUESTS FOR INFORMATION NOT ADDRESSED IN THIS CCO REMAIN IN FORCE

MARK	DATE	DESCRIPTIONS	BY	CH'D	CCO#
1	12/30/10	SEISMIC JOINT MODIFICATIONS HINGE A	RM	AA	25
0	07/30/10	SEISMIC JOINT MODIFICATIONS HINGE A	RM	AA	25

REVISIONS

	BY	CHECKED
DESIGN	R MAGGENTI	A AKINSANYA
DETAILS	R MAGGENTI	A AKINSANYA
QUANTITIES	R MAGGENTI	A AKINSANYA

STATE OF CALIFORNIA
DEPARTMENT OF TRANSPORTATION

DIVISION OF ENGINEERING SERVICES
STRUCTURE DESIGN
SPECIAL DESIGNS BRANCH

BRIDGE NO. 34-0006 L/R
KILOMETER POST 13.2/13.9

SAN FRANCISCO OAKLAND BAY BRIDGE
EAST SPAN SEISMIC SAFETY PROJECT

SELF-ANCHORED SUSPENSION BRIDGE
(SUPERSTRUCTURE & TOWER)

SEISMIC JOINT (HINGE A)

HINGE A EXPANSION JOINT DETAILS NO. 6

Caltrans Metric

ALL DIMENSIONS ARE IN MILLIMETERS UNLESS OTHERWISE SHOWN

ORIGINAL SCALE IN MILLIMETERS FOR REDUCED PLANS 0 10 20 30 40 50 60 70 80 90 100

CU 04
EA 0120F1

DISREGARD PRINTS BEARING EARLIER REVISION DATES 07/30/10

REVISION DATES

SHEET 447S4R1 OF

FILE => spec_des_br_proj/04-0120F1/1:\bb\04-01200\sas\contract plans and cco\cco\cco#25\7-revision 12-30-10\dgn\akjnt01d.dgn

USERNAME => DWinrow DATE PLOTTED => 30 DEC 2010 TIME PLOTTED => 13:23:03

DIST.	COUNTY	ROUTE	KILOMETER POST TOTAL PROJECT	SHEET NO.	TOTAL SHEETS
04	SF	80	13.2/13.9	864S5R1	1204

Caltrans Metric

REGISTERED ENGINEER - CIVIL

07-30-10
PLANS APPROVAL DATE

REGISTERED PROFESSIONAL ENGINEER Marwan N. Nader No. C 054426 Exp. 12/31/11 CIVIL STATE OF CALIFORNIA

The State of California or its officers or agents shall not be responsible for the accuracy or completeness of electronic copies of this plan sheet.

T.Y. LIN / MOFFATT & NICHOL
825 BATTERY STREET
SAN FRANCISCO, CA 94111

Caltrans now has a web site! To get to the web site, go to: http://www.dot.ca.gov

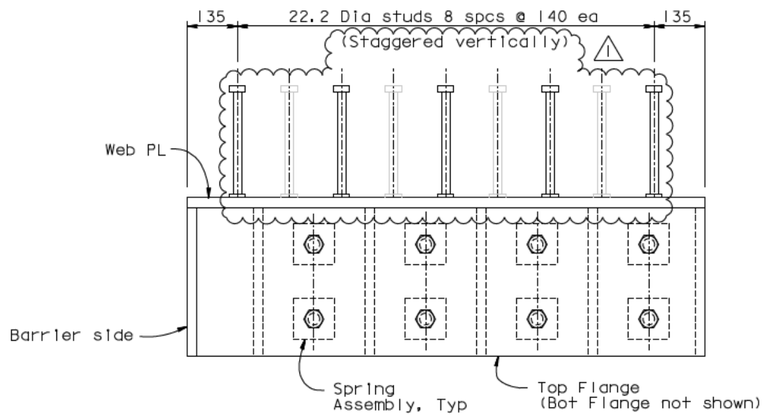

PLAN - BUILT UP CHANNEL ASSEMBLY "A"

NTS

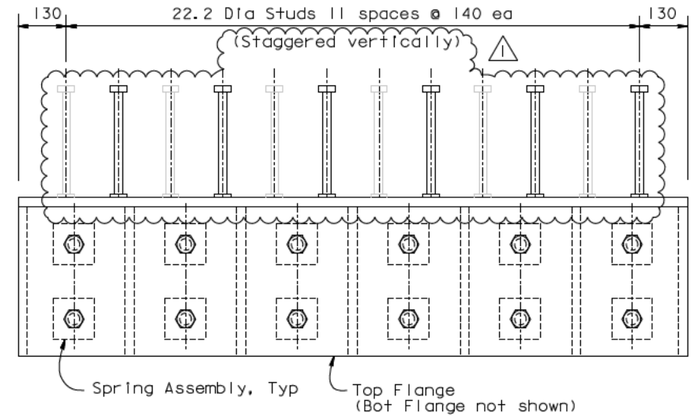

PLAN - BUILT UP CHANNEL ASSEMBLY "B"

NTS

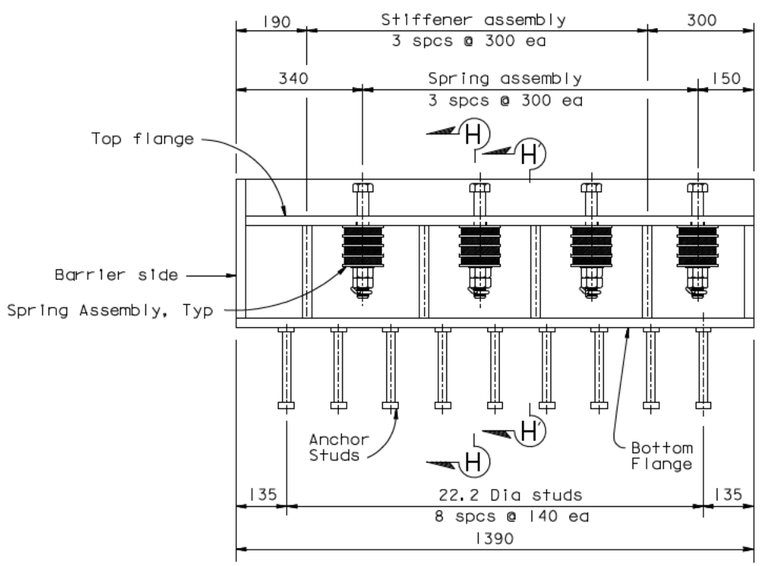

ELEVATION - BUILT UP CHANNEL ASSEMBLY "A"

NTS

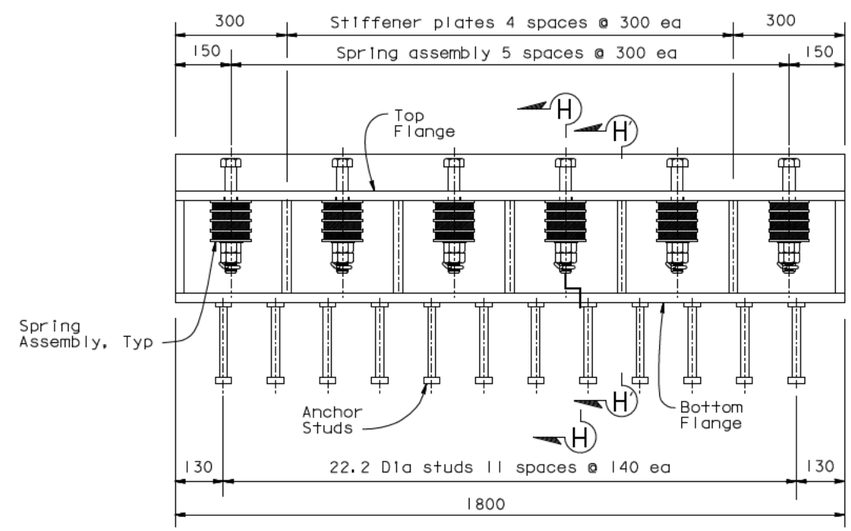

ELEVATION - BUILT UP CHANNEL ASSEMBLY "B"

NTS

NOTES:

1. For Sections H-H and H'-H', see "Hinge A Expansion Joint Details No. 8" sheet.

CONTRACT CHANGE ORDER NO. ____
SHEET ____ OF ____

REQUESTS FOR INFORMATION NOT ADDRESSED IN THIS CCO REMAIN IN FORCE

ALL DIMENSIONS ARE IN MILLIMETERS UNLESS OTHERWISE SHOWN

R. Valizadeh/V. Toan/Y.L./W.L./F.C.
DESIGN OVERSIGHT
Y. Liu
SIGN OFF DATE 12/30/10

MARK	DATE	DESCRIPTIONS	BY	CH'D	CCO#
1	12/30/10	SEISMIC JOINT MODIFICATIONS HINGE A	CR	MN	25
0	07/30/10	SEISMIC JOINT MODIFICATIONS HINGE A	CR	MN	25

REVISIONS

DESIGN	BY C. Redfield	CHECKED M. Nader	
DETAILS	BY H. Patel	CHECKED M. Benolt	
QUANTITIES	BY H. Patel	CHECKED J. Duxbury	

PREPARED FOR THE STATE OF CALIFORNIA DEPARTMENT OF TRANSPORTATION

R. Manzanarez
PROJECT ENGINEER

BRIDGE NO. 34-0006L/R
KILOMETER POST 13.2/13.9

SAN FRANCISCO OAKLAND BAY BRIDGE
EAST SPAN SEISMIC SAFETY PROJECT
SELF-ANCHORED SUSPENSION BRIDGE
(SUPERSTRUCTURE & TOWER)

HINGE A EXPANSION JOINT DETAILS NO. 7

Rev. Date: 5-18-98

ORIGINAL SCALE IN MILLIMETERS FOR REDUCED PLANS 0 10 20 30 40 50 60 70 80 90 100

CU 04
EA 0120F1

DISREGARD PRINTS BEARING EARLIER REVISION DATES 07/30/10

REVISION DATES (PRELIMINARY STAGE ONLY)

SHEET 447S5R1 OF

FILE -> I:\bb\04-012001\sas\contract plans and cco\cco\cco#25\7-revision 12-30-10\dgn\akjnt01e.dgn

100 % PS&E

USERNAME -> DWinrow DATE PLOTTED -> 30 DEC 2010 TIME PLOTTED -> 13:23:39

DIST.	COUNTY	ROUTE	KILOMETER POST TOTAL PROJECT	SHEET NO.	TOTAL SHEETS
04	SF	80	13.2/13.9	864S6RI	1204

REGISTERED ENGINEER - CIVIL

07-30-10

PLANS APPROVAL DATE

REGISTERED PROFESSIONAL ENGINEER Marwan N. Nader No. C 054426 Exp. 12/31/11 CIVIL STATE OF CALIFORNIA

The State of California or its officers or agents shall not be responsible for the accuracy or completeness of electronic copies of this plan sheet.

T.Y. LIN / MOFFATT & NICHOL
825 BATTERY STREET
SAN FRANCISCO, CA 94111

Caltrans now has a web site! To get to the web site, go to: http://www.dot.ca.gov

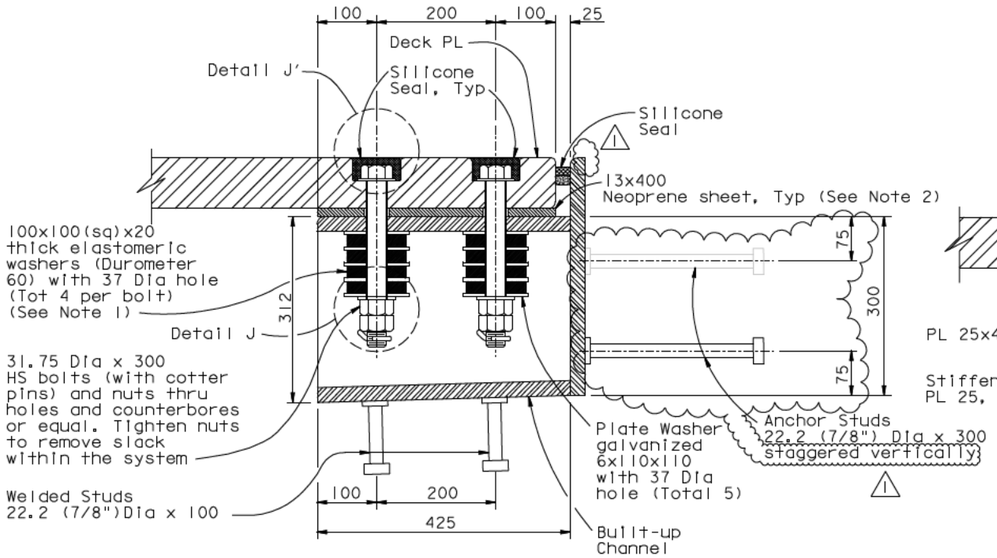

SECTION H-H
NTS

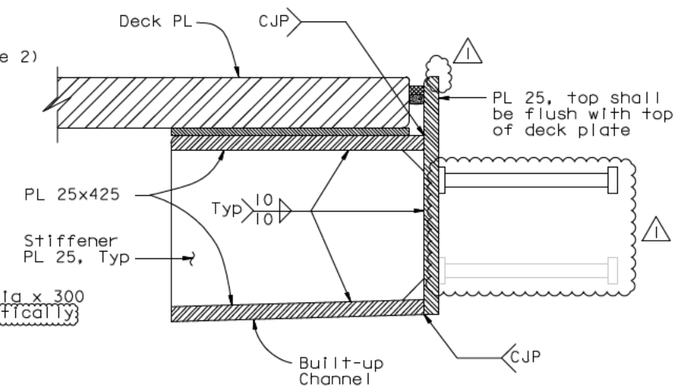

SECTION H'-H'
NTS

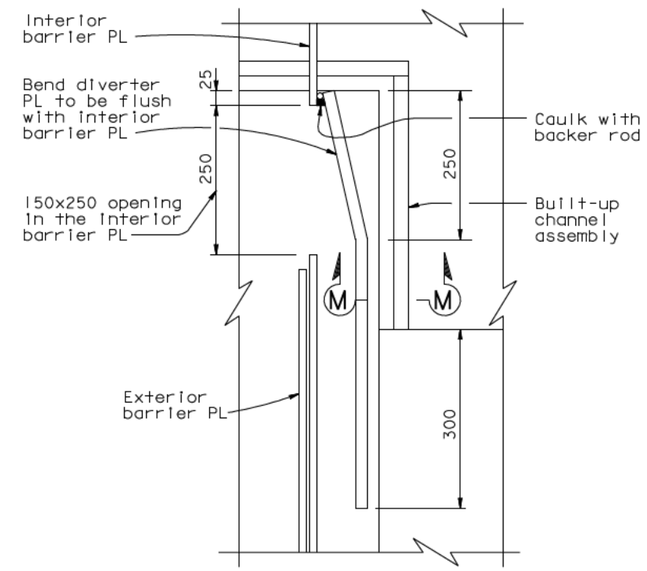

DETAIL L
1:5

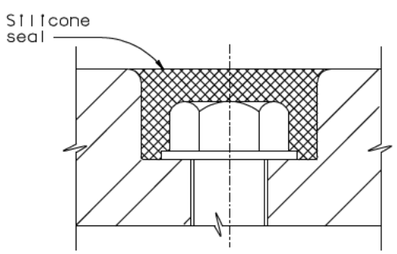

DETAIL J'
NTS

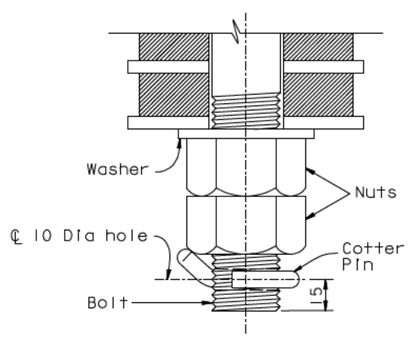

DETAIL J
NTS

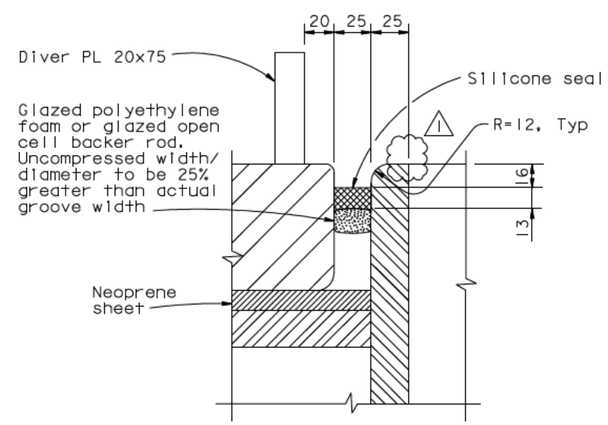

SECTION M-M
NTS

NOTES:

1. Elastomeric washers shall be plain neoprene.
2. The length of the 13x400 mm neoprene sheet below the deck plate is 1365 mm and 1800 mm long for modules "A" and "B" respectively.

CONTRACT CHANGE ORDER NO.
SHEET ___ OF ___

REQUESTS FOR INFORMATION NOT ADDRESSED IN THIS CCO REMAIN IN FORCE

ALL DIMENSIONS ARE IN MILLIMETERS UNLESS OTHERWISE SHOWN

R. Vallizadeh/V. Toan/Y.L./W.L./F.C.
DESIGN OVERSIGHT
SIGN OFF DATE 12/30/10

MARK	DATE	DESCRIPTIONS	BY	CH'D	CCO#
1	12/30/10	SEISMIC JOINT MODIFICATIONS HINGE A	CR	MN	25
0	07/30/10	SEISMIC JOINT MODIFICATIONS HINGE A	CR	MN	25

REVISIONS

DESIGN	BY C. Redfield	CHECKED M. Nader	
DETAILS	BY H. Patel	CHECKED M. Benolt	
QUANTITIES	BY H. Patel	CHECKED J. Duxbury	

PREPARED FOR THE STATE OF CALIFORNIA DEPARTMENT OF TRANSPORTATION

R. Manzanarez
PROJECT ENGINEER

BRIDGE NO. 34-0006L/R
KILOMETER POST 13.2/13.9

SAN FRANCISCO OAKLAND BAY BRIDGE
EAST SPAN SEISMIC SAFETY PROJECT
SELF-ANCHORED SUSPENSION BRIDGE
(SUPERSTRUCTURE & TOWER)

HINGE A EXPANSION JOINT DETAILS NO. 8

Rev. Date: 5-18-98

ORIGINAL SCALE IN MILLIMETERS FOR REDUCED PLANS 0 10 20 30 40 50 60 70 80 90 100

CU 04
EA 0120F1

DISREGARD PRINTS BEARING EARLIER REVISION DATES

REVISION DATES (PRELIMINARY STAGE ONLY) 07/30/10

SHEET 447S6RI OF

FILE -> I:\bb\04-012001\sas\contract plans and cco\cco\cco#25\7-revision 12-30-10\dgn\akjnt01f.dgn

USERNAME -> DWinrow DATE PLOTTED -> 30 DEC 2010 TIME PLOTTED -> 13:24:16

100 % PS&E

DIST.	COUNTY	ROUTE	KILOMETER POST TOTAL PROJECT	SHEET NO.	TOTAL SHEETS
04	SF	80	13.2/13.9	864S8R1	1204

REGISTERED ENGINEER - CIVIL

07-30-10

PLANS APPROVAL DATE

The State of California or its officers or agents shall not be responsible for the accuracy or completeness of electronic copies of this plan sheet.

REGISTERED PROFESSIONAL ENGINEER Marwan N. Nader No. C 054426 Exp. 12/31/11 CIVIL STATE OF CALIFORNIA

T.Y. LIN / MOFFATT & NICHOL
825 BATTERY STREET
SAN FRANCISCO, CA 94111

Caltrans now has a web site! To get to the web site, go to: http://www.dot.ca.gov

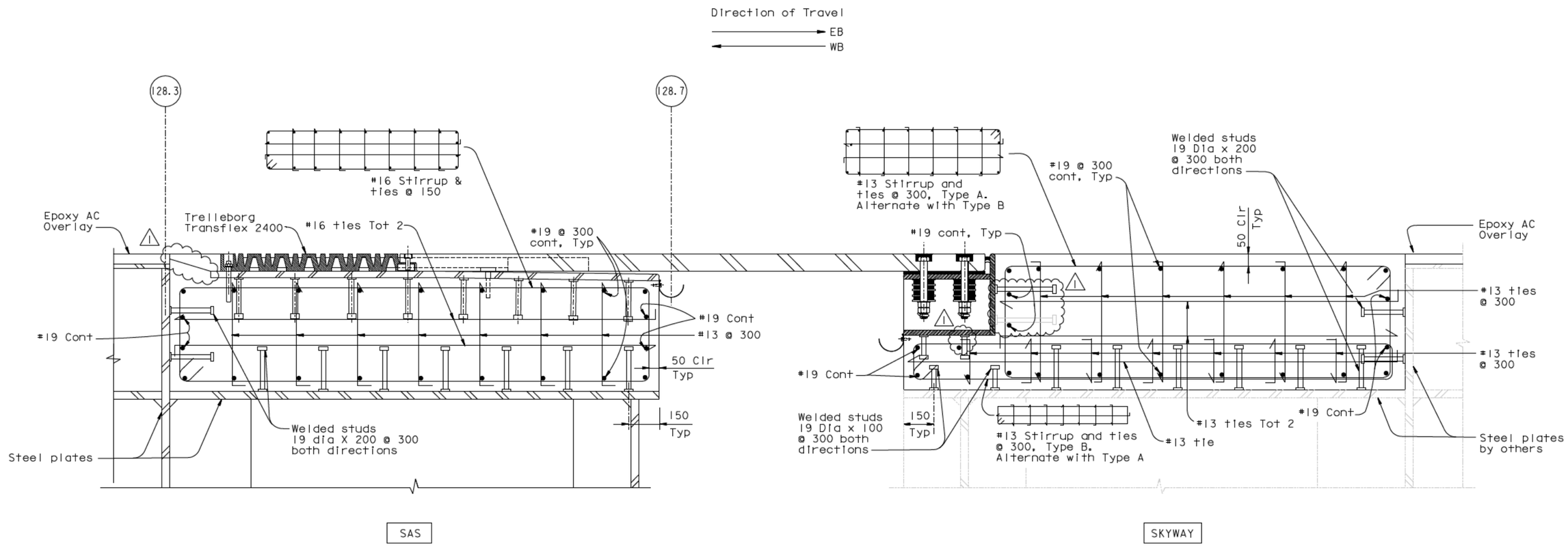

BLOCK OUT REINFORCEMENT DETAIL

1:10

CONTRACT CHANGE ORDER NO. _____
SHEET ____ OF ____

REQUESTS FOR INFORMATION NOT ADDRESSED IN THIS CCO REMAIN IN FORCE

ALL DIMENSIONS ARE IN MILLIMETERS UNLESS OTHERWISE SHOWN

R. Valizadeh/V. Toan/Y.L./W.L./F.C.
DESIGN OVERSIGHT
SIGN OFF DATE 01/04/11

MARK	DATE	DESCRIPTIONS	BY	CH'D	CCO#
1	01/04/11	SEISMIC JOINT MODIFICATIONS HINGE A	CR	MN	25
0	07/30/10	SEISMIC JOINT MODIFICATIONS HINGE A	CR	MN	25

REVISIONS

DESIGN	BY C. Redfield	CHECKED M. Nader	
DETAILS	BY H. Patel	CHECKED M. Benoit	
QUANTITIES	BY H. Patel	CHECKED J. Duxbury	

PREPARED FOR THE STATE OF CALIFORNIA DEPARTMENT OF TRANSPORTATION

R. Manzanarez
PROJECT ENGINEER

BRIDGE NO. 34-0006L/R
KILOMETER POST 13.2/13.9

SAN FRANCISCO OAKLAND BAY BRIDGE
EAST SPAN SEISMIC SAFETY PROJECT
SELF-ANCHORED SUSPENSION BRIDGE
(SUPERSTRUCTURE & TOWER)

HINGE A EXPANSION JOINT DETAILS NO. 10

Rev. Date: 5-18-98

ORIGINAL SCALE IN MILLIMETERS FOR REDUCED PLANS 0 10 20 30 40 50 60 70 80 90 100

CU 04
EA 0120F1

DISREGARD PRINTS BEARING EARLIER REVISION DATES 07/30/10

REVISION DATES (PRELIMINARY STAGE ONLY)

SHEET 447S8R1 OF

FILE -> L:\BB\04-012001\SAS\Contract Plans and CCO\CCO\CCO#25\8-Update 01-04-11\DGN\akjnt01h.dgn

100 % PS&E

USERNAME -> arivera DATE PLOTTED -> 04 JAN 2011 TIME PLOTTED -> 11:57:03

DIST	COUNTY	ROUTE	KILOMETER POST TOTAL PROJECT	SHEET No	TOTAL SHEETS
04	SF	80	13.2/13.9	864S1IRI	1204

REGISTERED CIVIL ENGINEER DATE

10-22-10
PLANS APPROVAL DATE

REGISTERED PROFESSIONAL ENGINEER
Enrico G. Maggenti
No. 46920
Exp. 6/30/11
CIVIL
STATE OF CALIFORNIA

The State of California or its officers or agents shall not be responsible for the accuracy or completeness of electronic copies of this plan sheet.

Caltrans now has a web site! To get to the web site, go to: http://www.dot.ca.gov

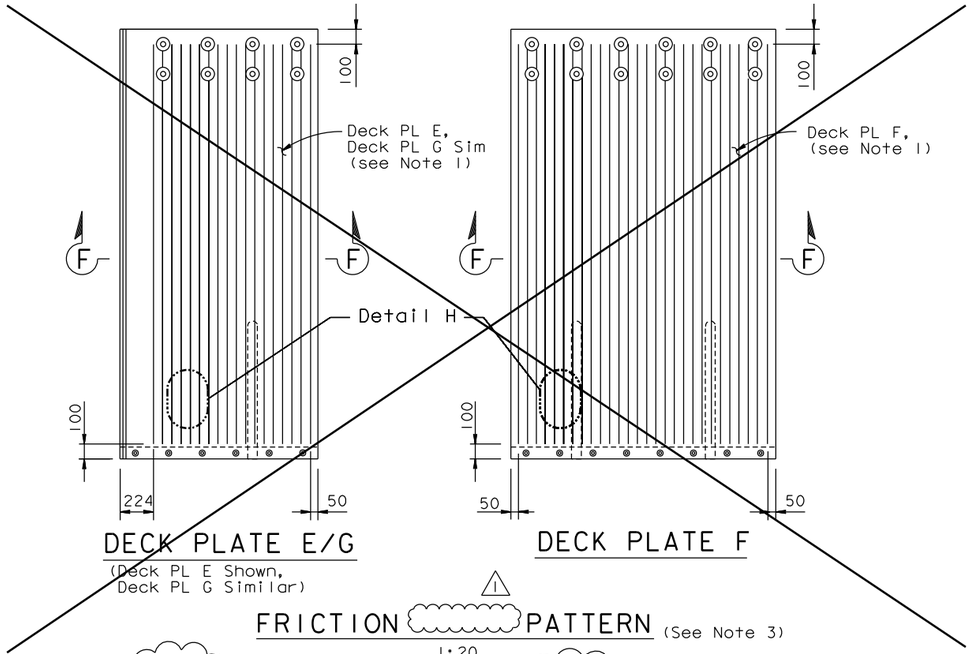

DECK PLATE E/G
(Deck PL E Shown,
Deck PL G Similar)

DECK PLATE F

FRICTION PATTERN (See Note 3)
1:20

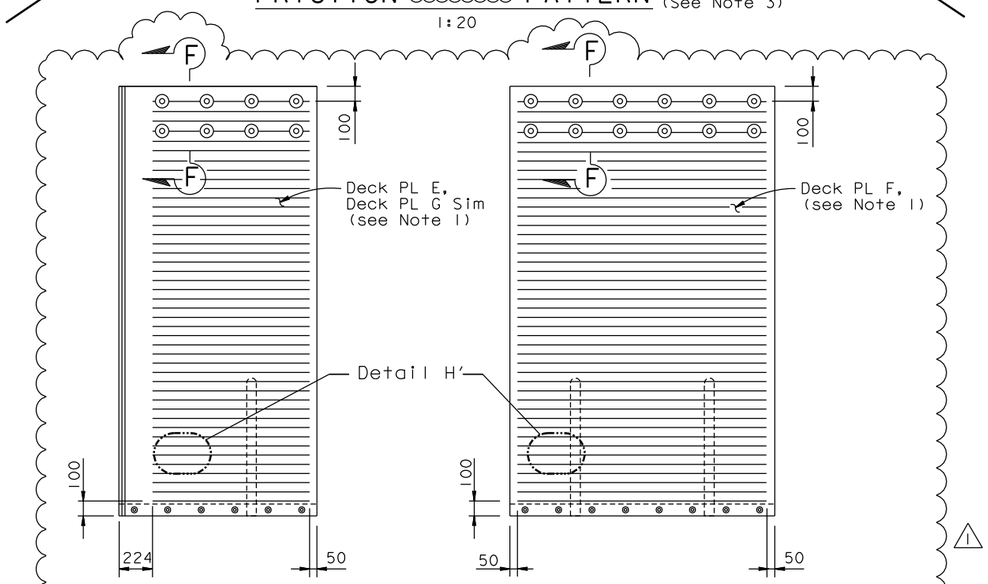

DECK PLATE E/G
(Deck PL E Shown,
Deck PL G Similar)

DECK PLATE F

ALT FRICTION PATTERN (See Note 3)
1:20

NOTES:

1. For Details not shown, see "Hinge A Expansion Joint Details No. 12" sheet.
2. For Section F-F, Detail H and Detail H', see "Hinge A Expansion Joint Details No. 6" sheet.
3. Friction pattern type shall be selected as directed by the Engineer. Polymer/Aggregate Skid Coat (PASC) may be applied per Engineer's direction.

CONTRACT CHANGE ORDER NO. ____
SHEET ____ OF ____

REQUESTS FOR INFORMATION NOT ADDRESSED IN THIS CCO REMAIN IN FORCE

SAN FRANCISCO OAKLAND BAY BRIDGE
EAST SPAN SEISMIC SAFETY PROJECT

SELF-ANCHORED SUSPENSION BRIDGE
(SUPERSTRUCTURE & TOWER)

SEISMIC JOINT (HINGE A)

HINGE A EXPANSION JOINT DETAILS NO. 13

Caltrans Metric

MARK	DATE	DESCRIPTIONS	BY	CH'D	CCO#
1	12/30/10	SEISMIC JOINT MODIFICATIONS HINGE A	RM	AA	25
0	10/22/10	SEISMIC JOINT MODIFICATIONS HINGE A	RM	AA	25

REVISIONS

	BY	CHECKED
DESIGN	R MAGGENTI	A AKINSANYA
DETAILS	R MAGGENTI	A AKINSANYA
QUANTITIES	R MAGGENTI	A AKINSANYA

STATE OF CALIFORNIA
DEPARTMENT OF TRANSPORTATION

DIVISION OF ENGINEERING SERVICES
STRUCTURE DESIGN
SPECIAL DESIGNS BRANCH

BRIDGE NO. 34-0006 L/R
KILOMETER POST 13.2/13.9

ALL DIMENSIONS ARE IN MILLIMETERS UNLESS OTHERWISE SHOWN

ORIGINAL SCALE IN MILLIMETERS FOR REDUCED PLANS 0 10 20 30 40 50 60 70 80 90 100

CU 04
EA 0120F1

DISREGARD PRINTS BEARING EARLIER REVISION DATES 10/22/10

REVISION DATES

SHEET 447S1IRI OF

FILE => spec_des_br_proj/04-0120F1/1:\bb\04-012001\sas\contract plans and cco\cco\cco#25\7-revision 12-30-10\dgn\akjnt011.dgn

USERNAME => DWinrow DATE PLOTTED => 30 DEC 2010 TIME PLOTTED => 13:26:25