DIST	COUNTY	ROUTE	KILOMETER POST TOTAL PROJECT	SHEET No	TOTAL SHEETS
04	SF	80	13.2/13.9	864S4R1	1204

REGISTERED CIVIL ENGINEER DATE

07-30-10
PLANS APPROVAL DATE

REGISTERED PROFESSIONAL ENGINEER Enrico G. Maggenti No. 46920 Exp. 6/30/11 CIVIL STATE OF CALIFORNIA

The State of California or its officers or agents shall not be responsible for the accuracy or completeness of electronic copies of this plan sheet.

Caltrans now has a web site! To get to the web site, go to: http://www.dot.ca.gov

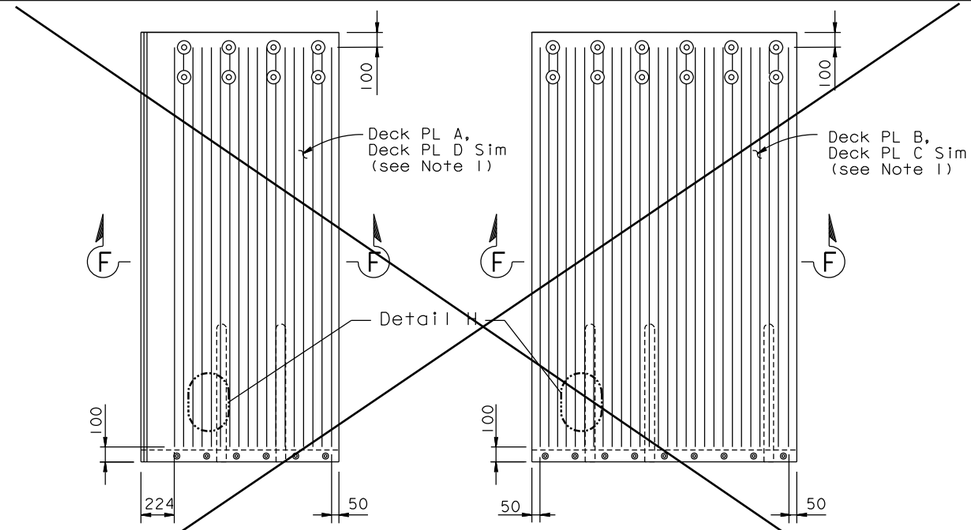

DECK PLATE A/D
(Deck PL A Shown, Deck PL D Similar)

DECK PLATE B/C
(Deck PL B Shown, Deck PL C Similar)

FRICTION PATTERN (See Note 2) 1
1:20

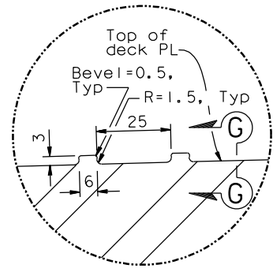

DETAIL G
1:1

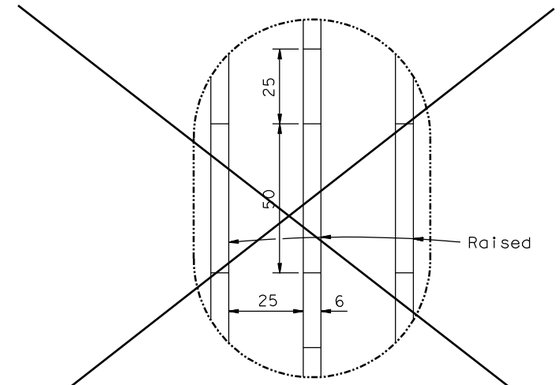

DETAIL H
1:1

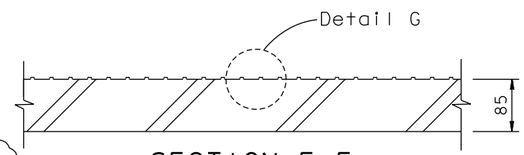

SECTION F-F
1:5

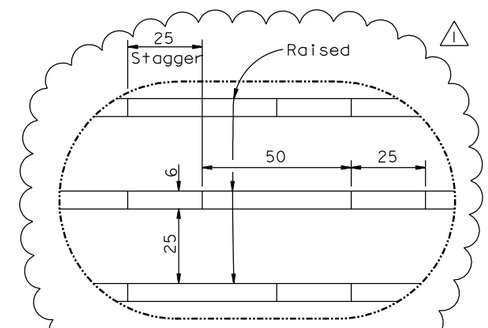

DETAIL H'
1:1

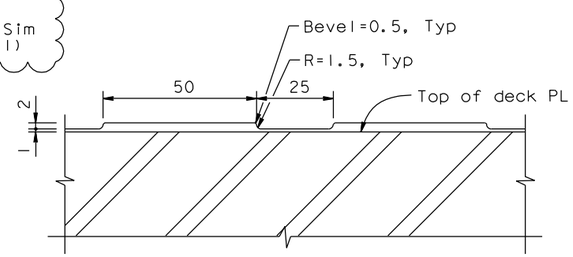

SECTION G-G
1:1

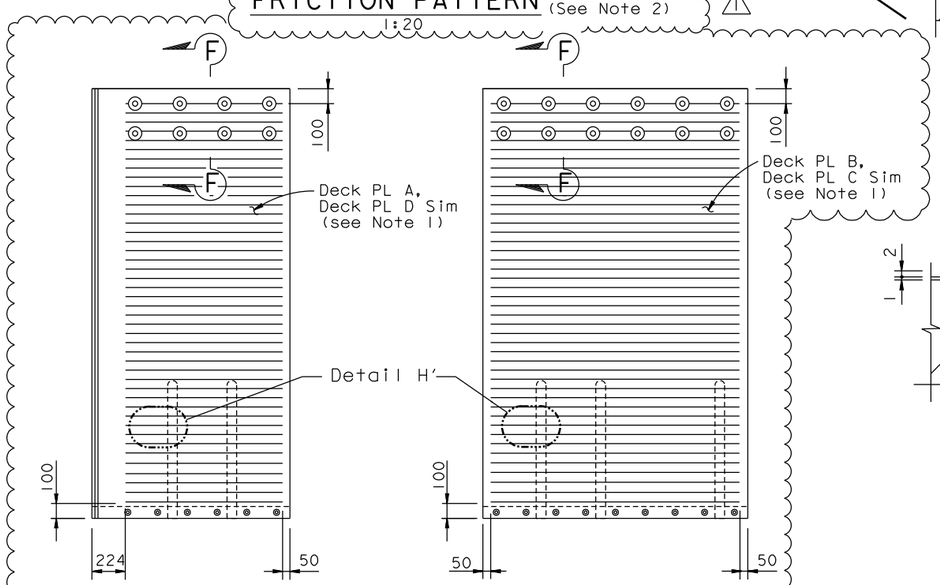

DECK PLATE A/D
(Deck PL A Shown, Deck PL D Similar)

DECK PLATE B/C
(Deck PL B Shown, Deck PL C Similar)

ALT FRICTION PATTERN (See Note 2) 1
1:20

NOTES:

1. For Details not shown, see "Hinge A Expansion Joint Details No.5" sheet.
2. Friction pattern type shall be selected as directed by the Engineer. Polymer/Aggregate Skid Coat (PASC) may be applied per Engineer's direction. (1)

CONTRACT CHANGE ORDER NO. ____
SHEET ___ OF ___

REQUESTS FOR INFORMATION NOT ADDRESSED IN THIS CCO REMAIN IN FORCE

MARK	DATE	DESCRIPTIONS	BY	CH'D	CCO#
1	12/30/10	SEISMIC JOINT MODIFICATIONS HINGE A	RM	AA	25
0	07/30/10	SEISMIC JOINT MODIFICATIONS HINGE A	RM	AA	25

REVISIONS

	BY	CHECKED
DESIGN	R MAGGENTI	A AKINSANYA
DETAILS	R MAGGENTI	A AKINSANYA
QUANTITIES	R MAGGENTI	A AKINSANYA

STATE OF CALIFORNIA
DEPARTMENT OF TRANSPORTATION

DIVISION OF ENGINEERING SERVICES
STRUCTURE DESIGN
SPECIAL DESIGNS BRANCH

BRIDGE NO. 34-0006 L/R
KILOMETER POST 13.2/13.9

SAN FRANCISCO OAKLAND BAY BRIDGE
EAST SPAN SEISMIC SAFETY PROJECT

SELF-ANCHORED SUSPENSION BRIDGE
(SUPERSTRUCTURE & TOWER)

SEISMIC JOINT (HINGE A)

HINGE A EXPANSION JOINT DETAILS NO. 6

Caltrans Metric

ALL DIMENSIONS ARE IN MILLIMETERS UNLESS OTHERWISE SHOWN

ORIGINAL SCALE IN MILLIMETERS FOR REDUCED PLANS 0 10 20 30 40 50 60 70 80 90 100

CU 04
EA 0120F1

DISREGARD PRINTS BEARING EARLIER REVISION DATES 07/30/10

REVISION DATES

SHEET 447S4R1 OF

FILE => spec_des_br_proj/04-0120F1/1:\bb\04-01200\sas\contract plans and cco\cco\cco#25\7-revision 12-30-10\dgn\akjnt01d.dgn

USERNAME => DWinrow DATE PLOTTED => 30 DEC 2010 TIME PLOTTED => 13:23:03