| DIST | COUNTY | ROUTE | KILOMETER POST TOTAL PROJECT | SHEET No | TOTAL SHEETS |
|---|---|---|---|---|---|
| 04 | SF | 80 | 13.2/13.9 | 865R4 | 1204 |

REGISTERED CIVIL ENGINEER DATE

09/15/2006
PLANS APPROVAL DATE

REGISTERED PROFESSIONAL ENGINEER EFTHYMIOS DELIS No. 51434 Exp. 6-30-08 CIVIL STATE OF CALIFORNIA

The State of California or its officers or agents shall not be responsible for the accuracy or completeness of electronic copies of this plan sheet.

Caltrans now has a web site! To get to the web site, go to: http://www.dot.ca.gov

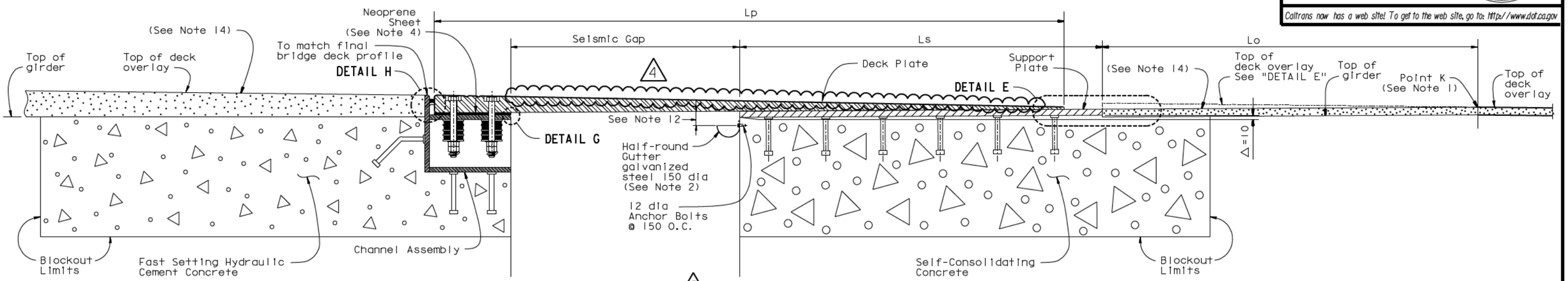


**ELEVATION** 2

SCALE = 1:10

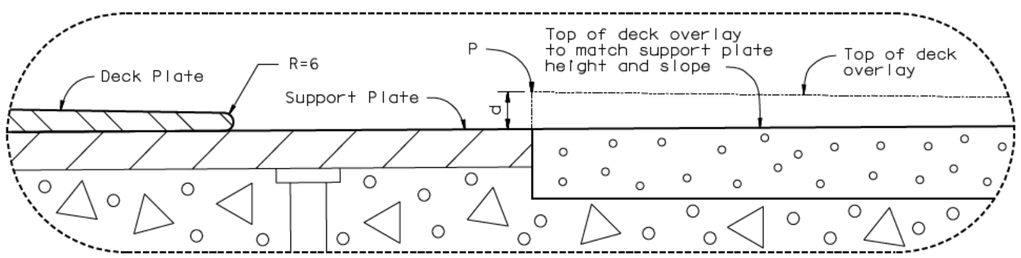


**DETAIL E** 2

SCALE = 1:2

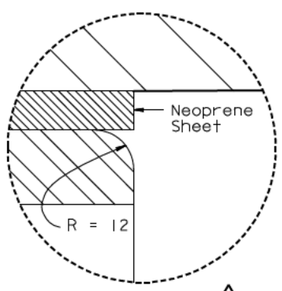


**DETAIL G** 1

SCALE = 1:1

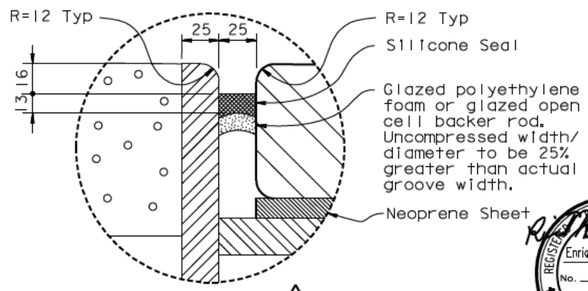


**DETAIL H** 1

SCALE = 1:2

REGISTERED PROFESSIONAL ENGINEER Enrico B. Maggenti No. 46920 Exp. 6/30/11 CIVIL STATE OF CALIFORNIA

FOR REVISION 4 ONLY

THE CONTRACTOR SHALL VERIFY ALL CONTROLLING FIELD DIMENSIONS BEFORE ORDERING OR FABRICATING ANY MATERIAL.

| JOINT INFORMATION 2 | | | |
|---|---|---|---|
| LOCATION | | HINGE AE | HINGE AW |
| SKEW (°) | | 0 | 0 |
| DECK PLATE | Thickness $t_d$ (mm) | 90 | 90 |
| | Length Lp (mm) | 3300 | 3300 |
| SUPPORT PLATE | Thickness ts (mm) | 32 | 32 |
| | Length Ls (mm) | 1900 | 1900 |
| SEISMIC GAP @ 20° | (mm) | 1200 | 1200 |
| 3 TRANSITION DEPTH | d (mm) | 25 | 25 |
| P (See DETAIL E) | STA | 62+04.188 | 62+14.885 |
| | ELEV | 48.635 | 49.444 |
| 3 TRANSITION LENGTH | Lo (mm) | ±1300 | ±1300 |

| MARK | DATE | DESCRIPTIONS | BY | CH'D | CCO # |
|---|---|---|---|---|---|
| 4 | 11/25/09 | Seismic Joint Modifications Hinge A | RM | AA | 25 |
| 3 | 7/17/08 | Seismic Joint Modifications Hinge A | TD | AK | 25 |
| 2 | 12/18/07 | Seismic Joint Modifications Hinge A | TD | AK | 25 |
| 1 | 9/15/06 | Joint Improvements | TD | AK | 25 |

REVISIONS

CONTRACT CHANGE ORDER NO. 25
SHEET ___ OF ___

NOTES: 2

1. K is defined as the intersection point between the top of deck slope and the top of the support plate slope and Lo is the transition length.
2. Use caulking or sealant between gutter and concrete.
3. Seismic Joint to be used in conjunction with closure pour. Closure pour shall not be placed until final deck surface is within the tolerance specified.
4. Thirty-Seven mm holes in neoprene sheets shall be drilled or punched so that the neoprene is not distorted at the time of installation. See "CHANNEL ASSEMBLY DETAILS NO. 2" sheet.
5. For deck plate details see " DECK PLATE DETAILS NO. 1" and " DECK PLATE DETAILS NO. 2" sheets.
6. For mild reinforcement in blockout areas, see "REINFORCRMENT DETAILS" sheet. Not all mild reinforcement is shown for clarity.
7. For channel assembly details, see "CHANNEL ASSEMBLY DETAILS NO 1" and "CHANNEL ASSEMBLY DETAILS NO 2".
8. Place deck plate, support plate and channel assembly so that full bearing is achieved between 1) deck and support plates and 11)deck plate and channel assembly.
9. Self-consolidating concrete shall be used in support plate blockout.
10. Fast setting hydraulic cement concrete shall be used in channel assembly blockout.
11. Catwalk for maintenance crew within seismic gap not shown.
12. Gutter shall be placed on the same side as the support plate, 75 mm minimum from the deck plate, at a 2% slope.
13. For support plate details see "SUPPORT PLATE DETAILS" sheet.
14. The top deck overlay within the seismic joint limits may be substituted by either Fast Setting Hydraulic Cement, or Self-Consolidating Concrete, or Structural Concrete Bridge with minimum $f'c$ = 35 MPa at 28 days.

SAN FRANCISCO OAKLAND BAY BRIDGE
EAST SPAN SEISMIC SAFETY PROJECT

SELF-ANCHORED SUSPENSION BRIDGE
(SUPERSTRUCTURE & TOWER)

SEISMIC JOINT (HINGE A)

CROSS SECTION

Caltrans Metric

| | BY | CHECKED |
|---|---|---|
| DESIGN | E DELIS | A KARTOUM |
| DETAILS | A R DUDSAK | A KARTOUM |
| QUANTITIES | E DELIS | A KARTOUM |

ALL DIMENSIONS ARE IN MILLIMETERS UNLESS OTHERWISE SHOWN

ORIGINAL SCALE IN MILLIMETERS FOR REDUCED PLANS 0 10 20 30 40 50 60 70 80 90 100

STATE OF CALIFORNIA
DEPARTMENT OF TRANSPORTATION

DIVISION OF ENGINEERING SERVICES
STRUCTURE DESIGN
SPECIAL DESIGNS BRANCH

CU 04
EA 0120F1

BRIDGE NO. 34-0006 L/R
KILOMETER POST 13.2/13.9

DISREGARD PRINTS BEARING EARLIER REVISION DATES

REVISION DATES 1/24/06 8/18/06 10/30/06 1/2/08 7/1/08

SHEET 448R4 OF

FILE => spec_des_br_proj/04-0120F1/1\bb\04-01200\sas\contract plans and cco\cco\cco#25\3-ct sheets 10-30-09\dgn\dagp01.dgn

USERNAME => dwinrow DATE PLOTTED => 20 NOV 2009 TIME PLOTTED => 13:58:48