DIST.	COUNTY	ROUTE	KILOMETER POST TOTAL PROJECT	SHEET NO.	TOTAL SHEETS
04	SF	80	13.2/13.9	B52r1d1	1204

REGISTERED ENGINEER - CIVIL

12-6-04
PLANS APPROVAL DATE

REGISTERED PROFESSIONAL ENGINEER — Marwan N. Nader — No. C 054426 — Exp. 12/31/07 — CIVIL — STATE OF CALIFORNIA

The State of California or its officers or agents shall not be responsible for the accuracy or completeness of electronic copies of this plan sheet.

T.Y. LIN / MOFFATT & NICHOL
825 BATTERY STREET
SAN FRANCISCO, CA 94111

Caltrans now has a web site! To get to the web site, go to: http://www.dot.ca.gov

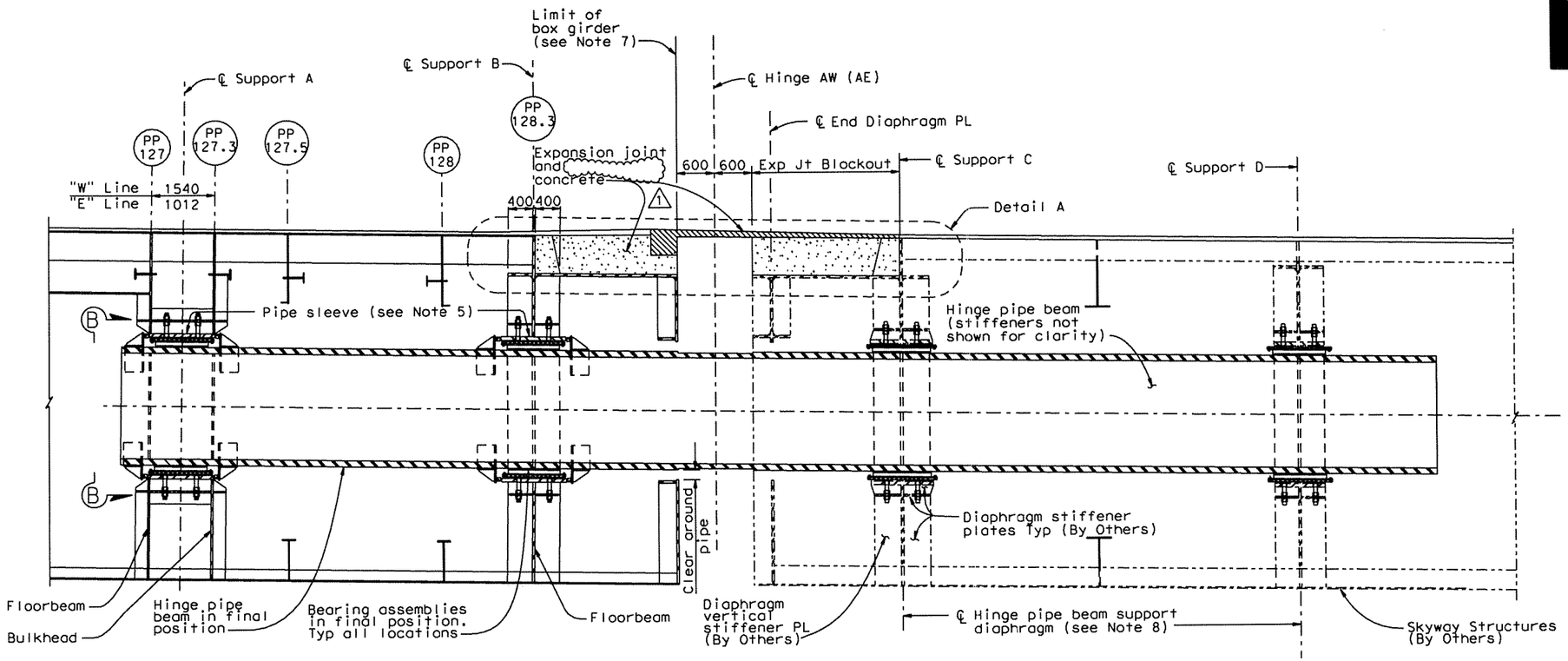

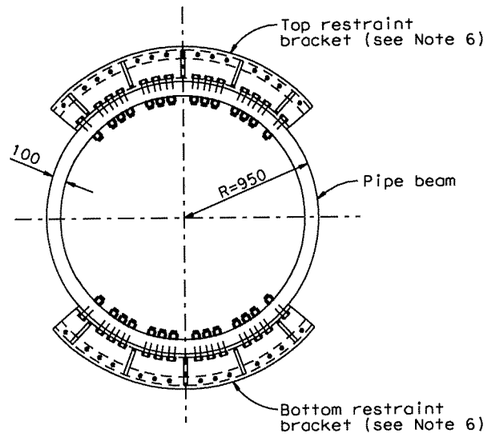

END VIEW B-B
1:20

SECTION A-A (Orientation of Expansion Joint shown for Eastbound, see Note 10)
1:40

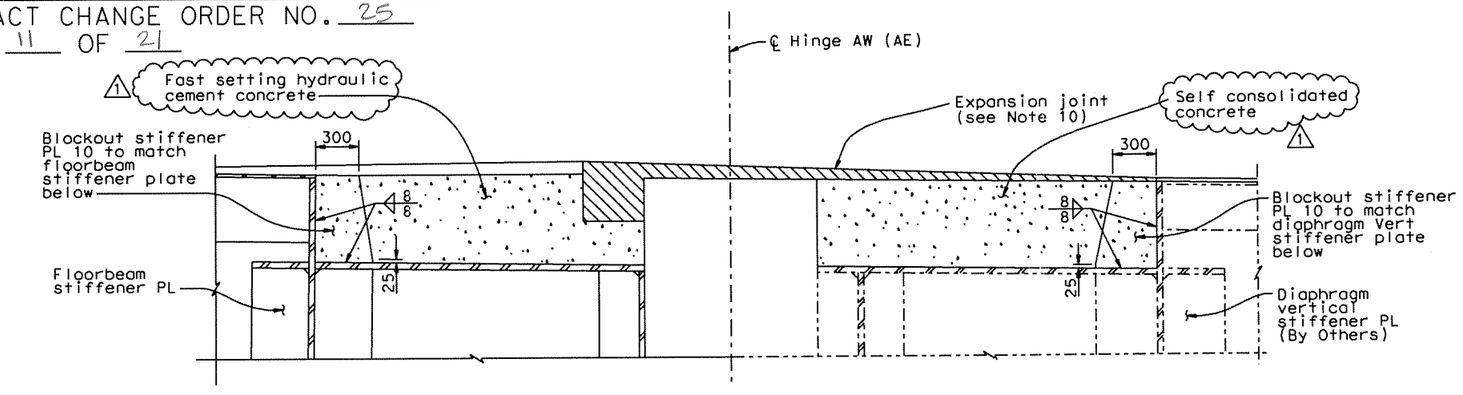

DETAIL A
1:20

NOTES:

1. For locations and alignment of floor beams at PP127, PP127.5 and PP128, see "Girder Framing Plan No.4" sheet.
2. Bulkhead at PP127.3 is parallel to the floor beam at PP 127.
3. Floorbeam at PP 128.3 is parallel to ℄ Hinge A. For locations, see "Hinge A Geometry Layout" sheets.
4. For expansion joint details, see "Hinge A Expansion Joint Details" sheets.
5. Pipe sleeve shall be parallel to pipe beam.
6. For restraint bracket details, see "Hinge A Details No.9" sheet.
7. For girder details east of PP 128.3, see "Girder At East Transition No.8" and "Floorbeam At East Transition No.10" sheets.
8. For hinge bearing support location, see "Hinge A Geometry Layout" sheets.
9. For "Hinge A Details" sheets, the Contractor shall verify all controlling field dimensions before ordering or fabricating any material.
10. For orientation of expansion joints, see "Seismic Joint" plans.

MARK	DATE	DESCRIPTIONS	BY	CH'D	CCO#
1	11/06/06	PER CALTRANS SEISMIC JOINT MODIFICATION	MN	AS	25
		REVISIONS			

CONTRACT CHANGE ORDER NO. 25
SHEET 11 OF 21

ALL DIMENSIONS ARE IN MILLIMETERS UNLESS OTHERWISE SHOWN

SAN FRANCISCO OAKLAND BAY BRIDGE
EAST SPAN SEISMIC SAFETY PROJECT
SELF-ANCHORED SUSPENSION BRIDGE
(SUPERSTRUCTURE & TOWER)

HINGE A DETAILS NO.1

R. Valizadeh/V. Toan/Y.L./W.L./F.C.
DESIGN OVERSIGHT
SIGN OFF DATE 11/08/06

	BY	CHECKED
DESIGN	M. Nader	N. Vo
DETAILS	G. Baker	N. Vo
QUANTITIES	G. Baker	N. Vo

PREPARED FOR THE STATE OF CALIFORNIA DEPARTMENT OF TRANSPORTATION

R. Wanzanarez
PROJECT ENGINEER

BRIDGE NO. 34-0006L/R
KILOMETER POST 13.2/13.9

CU 04
EA 0120F1

FILE => @REQUEST

Rev. Date: 5-18-98

ORIGINAL SCALE IN MILLIMETERS FOR REDUCED PLANS 0 10 20 30 40 50 60 70 80 90 100

DISREGARD PRINTS BEARING EARLIER REVISION DATES

REVISION DATES (PRELIMINARY STAGE ONLY): 05/31/01 | 04/08/02 | 07/01/02 | 12/31/02 | 07/18/03

SHEET 435r1d1 OF

100 % PS&E

USERNAME => @USER DATE PLOTTED => @DATE TIME PLOTTED => @TIME

DIST.	COUNTY	ROUTE	KILOMETER POST TOTAL PROJECT	SHEET NO.	TOTAL SHEETS
04	SF	80	13.2/13.9	863r1d1	1204

REGISTERED ENGINEER - CIVIL

12-6-04

PLANS APPROVAL DATE

REGISTERED PROFESSIONAL ENGINEER Marwan N. Nader No. C 054426 Exp. 12/31/07 CIVIL STATE OF CALIFORNIA

The State of California or its officers or agents shall not be responsible for the accuracy or completeness of electronic copies of this plan sheet.

T.Y. LIN / MOFFATT & NICHOL
825 BATTERY STREET
SAN FRANCISCO, CA 94111

Caltrans now has a web site! To get to the web site, go to: http://www.dot.ca.gov

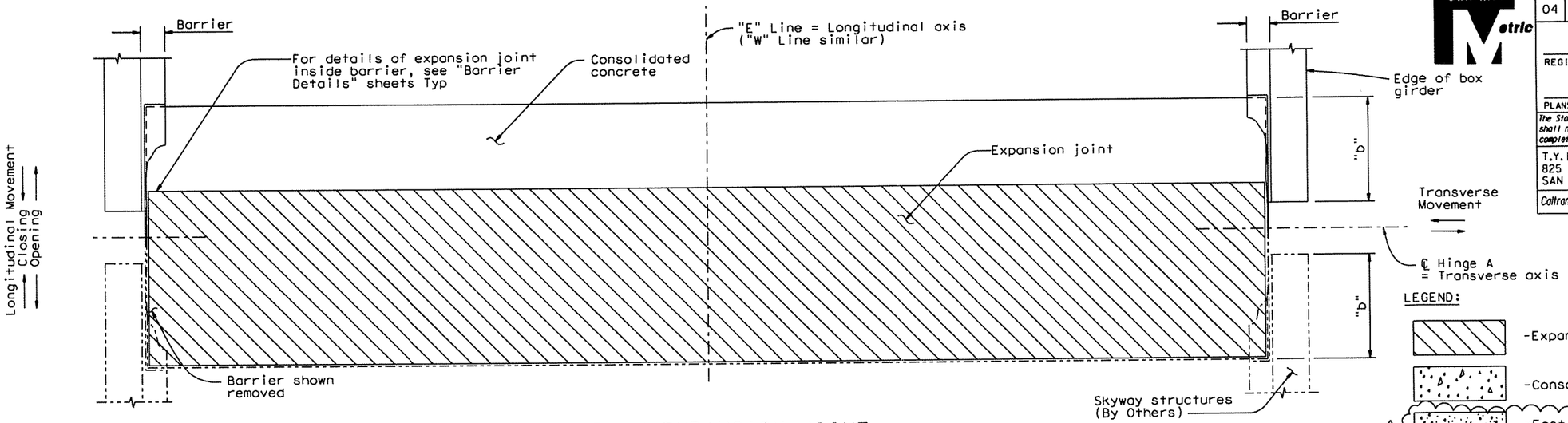

PLAN-EXPANSION JOINT

1:50

LEGEND:

-Expansion Joint

-Consolidated concrete

1 -Fast setting hydraulic cement concrete

NOTES:

1. For details and orientation of expansion joint and concrete, see "Seismic Joint" plans.
2. Values are for mean temperature of 20°C and no creep and shrinkage.

MARK	DATE	DESCRIPTIONS	BY	CH'D	CCO#
1	11/06/06	PER CALTRANS SEISMIC JOINT MODIFICATIONS	MN	AS	25

REVISIONS

CONTRACT CHANGE ORDER NO. 25
SHEET 12 OF 21

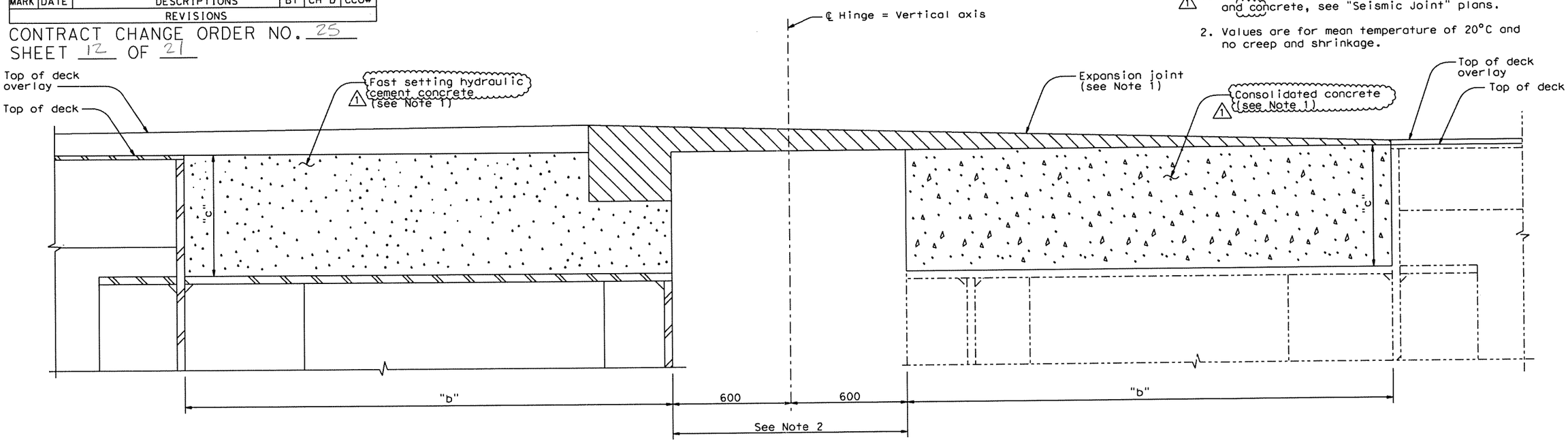

TYPICAL SECTION

1:10

ALL DIMENSIONS ARE IN MILLIMETERS UNLESS OTHERWISE SHOWN

SAN FRANCISCO OAKLAND BAY BRIDGE
EAST SPAN SEISMIC SAFETY PROJECT
SELF-ANCHORED SUSPENSION BRIDGE
(SUPERSTRUCTURE & TOWER)

HINGE A EXPANSION JOINT DETAILS NO. 1

R. Valizadeh/V. Toan/Y.L./W.L./F.C.
DESIGN OVERSIGHT
Roger Valizadeh / Vong Toan / Y Liu
SIGN OFF DATE 11/06/06

	BY	CHECKED
DESIGN	M. Nader	N. Vo
DETAILS	J. Krizek	N. Vo
QUANTITIES	J. Krizek	N. Vo

PREPARED FOR THE STATE OF CALIFORNIA DEPARTMENT OF TRANSPORTATION

R. Manzanarez
PROJECT ENGINEER

BRIDGE NO. 34-0006L/R
KILOMETER POST 13.2/13.9

CU 04
EA 0120F1

DISREGARD PRINTS BEARING EARLIER REVISION DATES

REVISION DATES (PRELIMINARY STAGE ONLY) 04/08/02 07/01/02 12/13/02 07/18/03

SHEET 446r1d1 OF

Rev. Date: 5-18-98

ORIGINAL SCALE IN MILLIMETERS FOR REDUCED PLANS 0 10 20 30 40 50 60 70 80 90 100

FILE => $REQUEST

USERNAME => $USER DATE PLOTTED => $DATE TIME PLOTTED => $TIME

100 % PS&E

865R1

DIST	COUNTY	ROUTE	KILOMETER POST TOTAL PROJECT	SHEET No	TOTAL SHEETS
04	SF	80	13.2/13.9	865R1	1204

REGISTERED CIVIL ENGINEER DATE

09/15/2006
PLANS APPROVAL DATE

REGISTERED PROFESSIONAL ENGINEER — EFTHYMIOS DELIS — No. 51434 — Exp. 6-30-08 — CIVIL — STATE OF CALIFORNIA

The State of California or its officers or agents shall not be responsible for the accuracy or completeness of electronic copies of this plan sheet.

Caltrans now has a web site! To get to the web site, go to: http://www.dot.ca.gov

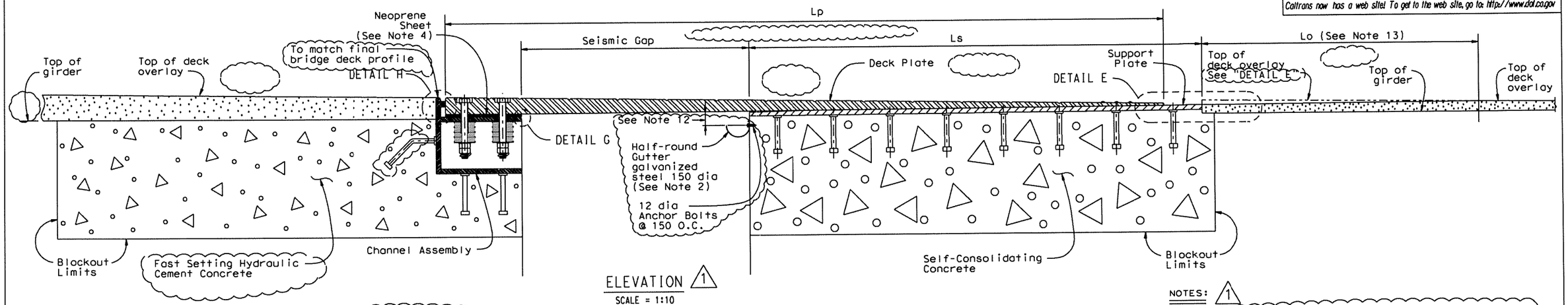

ELEVATION 1
SCALE = 1:10

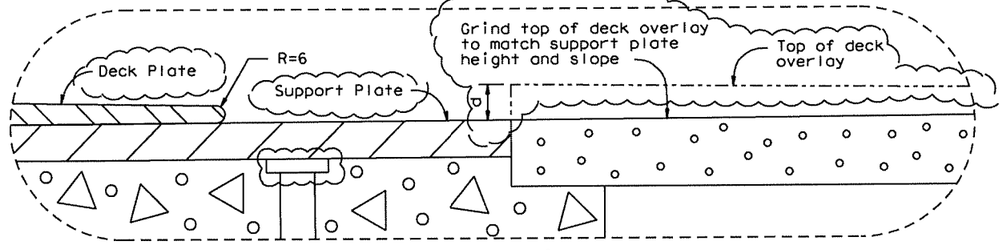

DETAIL E 1
SCALE = 1:2

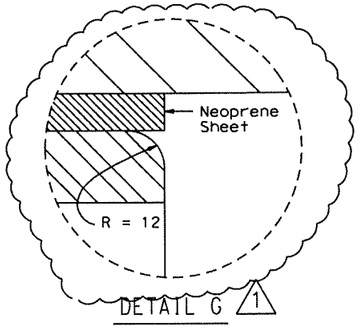

DETAIL G 1
SCALE = 1:1

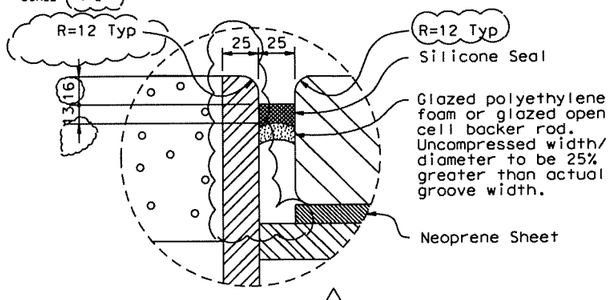

DETAIL H 1
SCALE = 1:2

THE CONTRACTOR SHALL VERIFY ALL CONTROLLING FIELD DIMENSIONS BEFORE ORDERING OR FABRICATING ANY MATERIAL.

JOINT INFORMATION 1

LOCATION		HINGE AE	HINGE AW
SKEW (°)		0	0
DECK PLATE	Thickness t_d (mm)	90	90
	Length Lp (mm)	3800	3800
SUPPORT PLATE	Thickness ts (mm)	32	32
	Length Ls (mm)	2400	2400
SEISMIC GAP @ 20°	(mm)	1200	1200
MAXIMUM DECK GRIND	d (mm)	13	24

MARK	DATE	REVISIONS	BY	CH'D
1	9/15/06	Joint improvements	TD	AK

CONTRACT CHANGE ORDER NO. 25
SHEET 13 OF 21

NOTES: 1

1. Install Seismic Joint after erecting bike path, placing deck overlay up to the limit of the blockout, utilities and barrier.
2. Use caulking or sealant between gutter and concrete.
3. Seismic Joint to be used in conjunction with closure pour. Closure pour shall not be placed until final deck surface is within the tolerance specified.
4. Thirty Seven mm holes in neoprene sheets shall be drilled or punched so that the neoprene is not distorted at the time of installation. See "CHANNEL ASSEMBLY DETAILS NO. 2" sheet.
5. For deck plate details see " DECK PLATE DETAILS NO. 1" and " DECK PLATE DETAILS NO. 2" sheets.
6. For mild reinforcement in blockout areas, see "REINFORCMENT DETAILS" sheet. (Not all mild reinforcement is shown for clarity.
7. For channel assembly details, see "CHANNEL ASSEMBLY DETAILS NO 1" and "CHANNEL ASSEMBLY DETAILS NO 2".
8. Place deck plate, support plate and channel assembly so that full bearing is achieved between i) deck and support plates and ii) deck plate and channel assembly.
9. Self-consolidating concrete shall be used in support plate blockout.
10. Fast setting hydraulic cement concrete shall be used in channel assembly blockout.
11. Catwalk for maintenance crew within seismic gap not shown.
12. Gutter shall be placed on the same side as the support plate, 75 mm minimum from the deck plate, at a 2% slope.
13. Lo is the length of ground deck overlay and is equal to d/(Support % slope - Profile grade).
14. For support plate details see "SUPPORT PLATE DETAILS" sheet.

DESIGN	BY E DELIS	CHECKED A KARTOUM
DETAILS	BY A R DUDSAK	CHECKED A KARTOUM
QUANTITIES	BY E DELIS	CHECKED A KARTOUM

STATE OF CALIFORNIA
DEPARTMENT OF TRANSPORTATION

DIVISION OF ENGINEERING SERVICES
STRUCTURE DESIGN
SPECIAL DESIGNS BRANCH

CU 04
EA 0120F1

FILE => spec_des_br_proj/04-0120F1/$REQUEST

ALL DIMENSIONS ARE IN MILLIMETERS UNLESS OTHERWISE SHOWN

ORIGINAL SCALE IN MILLIMETERS FOR REDUCED PLANS 0 10 20 30 40 50 60 70 80 90 100

BRIDGE NO.	SAN FRANCISCO OAKLAND BAY BRIDGE EAST SPAN SEISMIC SAFETY PROJECT
	SELF-ANCHORED SUSPENSION BRIDGE (SUPERSTRUCTURE & TOWER)
34-0006 L/R	SEISMIC JOINT (HINGE A)
KILOMETER POST 13.2/13.9	CROSS SECTION

DISREGARD PRINTS BEARING EARLIER REVISION DATES

REVISION DATES: 1/24/06 8/18/06 10/30/06

SHEET 448R1 OF

STRUCTURES DESIGN DETAIL SHEET (METRIC) (REV.03-17-04)

TIME PLOTTED => $TIME
DATE PLOTTED => $DATE
USERNAME => $USER

866r1d1

DIST	COUNTY	ROUTE	KILOMETER POST TOTAL PROJECT	SHEET NO	TOTAL SHEETS
04	SF	80	13.2/13.9	866R1	1204

REGISTERED CIVIL ENGINEER DATE

09-15-2006
PLANS APPROVAL DATE

REGISTERED PROFESSIONAL ENGINEER
EFTHYMIOS DELIS
No. 51434
Exp. 6-30-08
CIVIL
STATE OF CALIFORNIA

The State of California or its officers or agents shall not be responsible for the accuracy or completeness of electronic copies of this plan sheet.

Caltrans now has a web site! To get to the web site, go to: http://www.dot.ca.gov

INDEX TO PLANS 1

SHEET NO.	TITLE
865R1	CROSS SECTION
866R1	INDEX TO PLANS
867R1	DECK PLATE DETAILS NO. 1
868R1	DECK PLATE DETAILS NO. 2
869R1	CHANNEL ASSEMBLY DETAILS NO. 1
870R1	CHANNEL ASSEMBLY DETAILS NO. 2
871R1	SUPPORT PLATE DETAILS
872R1	REINFORCEMENT DETAILS
872S1	CONSTRUCTION SEQUENCE

GENERAL NOTES LOAD FACTOR DESIGN 1

DESIGN:

Bridge Design Specifications (2000 LFD) AASHTO with Interims and revisions by Caltrans)

LIVE LOADING:

HS20-44, Alternative Military and Permit Design loads impact: 75%

STRUCTURAL STEEL:

ASTM A709/A709M Grade 50 [345] unless noted otherwise.

BOLTS:

ASTM (A449) galvanized unless noted otherwise.

WELDING:

All structural steel plate interface connections shall be made with continuous complete joint penetration (CJP) welds unless noted otherwise.

SEISMIC LOADING:

STRUCTURAL CONCRETE:

Mild Steel Reinforcement (ASTM A706) f_y =415 MPa, f_u =738 MPa

MARK	DATE	REVISIONS	BY	CH'D
1	9/15/06	Sheet numbering/Legend	TD	AK

CONTRACT CHANGE ORDER NO. 25
SHEET 14 OF 21

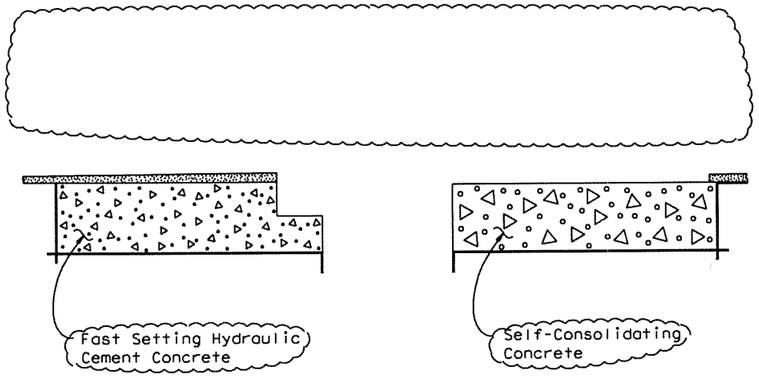

LEGEND 1

Epoxy AC Overlay

Fast Setting Hydraulic Cement Concrete (FSHCC)
(f'_{ci} = 14 MPa @ 3 hours
f'_c = 35 MPa @ 56 days)

Self-Consolidating Concrete (SCC) Bridge
(f'_c = 35 MPa @ 56 days)

THE CONTRACTOR SHALL VERIFY ALL CONTROLLING FIELD DIMENSIONS BEFORE ORDERING OR FABRICATING ANY MATERIAL.

	BY	CHECKED
DESIGN	E DELIS	A KARTOUM
DETAILS	A R DUDSAK	A KARTOUM
QUANTITIES	E DELIS	A KARTOUM

STATE OF CALIFORNIA
DEPARTMENT OF TRANSPORTATION

DIVISION OF ENGINEERING SERVICES
STRUCTURE DESIGN
SPECIAL DESIGNS BRANCH

CU 04
EA 0120F1

BRIDGE NO. 34-0006 L/R
KILOMETER POST 13.2/13.9

SAN FRANCISCO OAKLAND BAY BRIDGE
EAST SPAN SEISMIC SAFETY PROJECT
SELF-ANCHORED SUSPENSION BRIDGE
(SUPERSTRUCTURE & TOWER)
SEISMIC JOINT (HINGE A)
INDEX TO PLANS

ALL DIMENSIONS ARE IN MILLIMETERS UNLESS OTHERWISE SHOWN

ORIGINAL SCALE IN MILLIMETERS FOR REDUCED PLANS 0 10 20 30 40 50 60 70 80 90 100

DISREGARD PRINTS BEARING EARLIER REVISION DATES

REVISION DATES: 1/24/06 8/18/06 10/30/06

SHEET 449R1 OF

FILE => spec_des_br_proj/04-0120F1/$REQUEST

STRUCTURES DESIGN DETAIL SHEET (METRIC) (REV.03-17-04)

USERNAME => $USER DATE PLOTTED => $DATE TIME PLOTTED => $TIME

DIST	COUNTY	ROUTE	KILOMETER POST TOTAL PROJECT	SHEET NO	TOTAL SHEETS
04	SF	80	13.2/13.9	867R1	1204

REGISTERED CIVIL ENGINEER DATE

09/15/2006
PLANS APPROVAL DATE

REGISTERED PROFESSIONAL ENGINEER
EFTHYMIOS DELIS
No. 51434
Exp. 6-30-08
CIVIL
STATE OF CALIFORNIA

The State of California or its officers or agents shall not be responsible for the accuracy or completeness of electronic copies of this plan sheet.

Caltrans now has a web site! To get to the web site, go to: http://www.dot.ca.gov

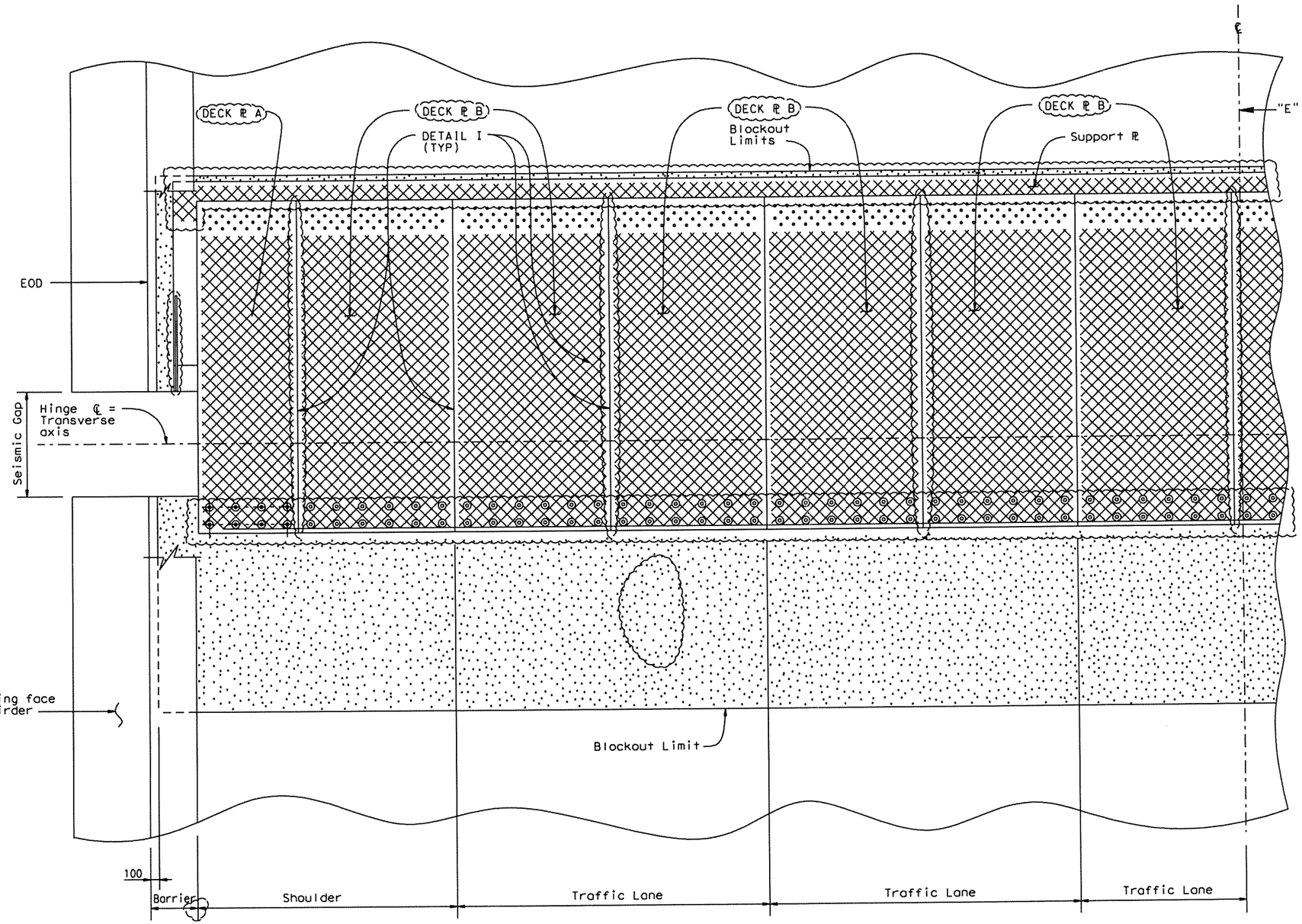

EXPANSION JOINT (HALF) PLAN (1)
SCALE 1:25

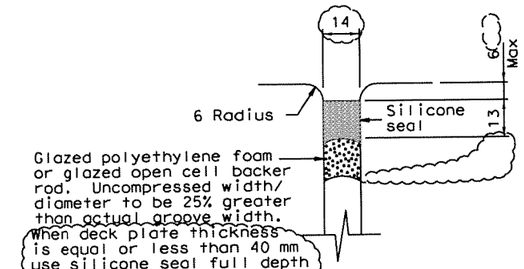

DETAIL I (1)
SCALE = 1:1

NOTES: (1)

1. For Plates A and (B) see "DECK PLATE DETAILS NO 2" sheet.
2. Denotes deck Steel Plate with V-grooves at (±)45°.
3. Deck Plate A matches with Support Plate A and the Channel Assembly A (Module A) Likewise for Module B. Channel assemblies are 14 wider than their corresponding deck plates.
4. One module "B" is placed per half traffic lane.
5. Portions of barriers are not shown for clarity.

MARK	DATE	REVISIONS	BY	CH'D
1	9/15/06	Steel Pls & Seal changes	TD	AK

CONTRACT CHANGE ORDER NO. 25
SHEET 15 OF 21

THE CONTRACTOR SHALL VERIFY ALL CONTROLLING FIELD DIMENSIONS BEFORE ORDERING OR FABRICATING ANY MATERIAL.

	BY	CHECKED
DESIGN	E DELIS	A KARTOUM
DETAILS	A R DUDSAK	A KARTOUM
QUANTITIES	E DELIS	A KARTOUM

Caltrans Metric

ALL DIMENSIONS ARE IN MILLIMETERS UNLESS OTHERWISE SHOWN

ORIGINAL SCALE IN MILLIMETERS FOR REDUCED PLANS 0 10 20 30 40 50 60 70 80 90 100

STATE OF CALIFORNIA
DEPARTMENT OF TRANSPORTATION

DIVISION OF ENGINEERING SERVICES
STRUCTURE DESIGN
SPECIAL DESIGNS BRANCH

CU 04
EA 0120F1

FILE => spec_des_br_proj/04-0120F1/$REQUEST

BRIDGE NO.	
34-0006 L/R	
KILOMETER POST	
13.2/13.9	

DISREGARD PRINTS BEARING EARLIER REVISION DATES →

SAN FRANCISCO OAKLAND BAY BRIDGE
EAST SPAN SEISMIC SAFETY PROJECT

SELF-ANCHORED SUSPENSION BRIDGE
(SUPERSTRUCTURE & TOWER)

SEISMIC JOINT (HINGE A)

DECK PLATE DETAILS NO 1

REVISION DATES								SHEET	OF
1/24/06	8/14/06	10/30/06						450R1	

STRUCTURES DESIGN DETAIL SHEET (METRIC) (REV.03-17-04)

USERNAME => $USER DATE PLOTTED => $DATE TIME PLOTTED => $TIME

DIST	COUNTY	ROUTE	KILOMETER POST TOTAL PROJECT	SHEET No	TOTAL SHEETS
04	SF	80	13.2/13.9	868R1	1204

REGISTERED CIVIL ENGINEER DATE

09/15/2006
PLANS APPROVAL DATE

REGISTERED PROFESSIONAL ENGINEER — EFTHYMIOS DELIS — No. 51434 — Exp. 6-30-08 — CIVIL — STATE OF CALIFORNIA

The State of California or its officers or agents shall not be responsible for the accuracy or completeness of electronic copies of this plan sheet.

Caltrans now has a web site! To get to the web site, go to: http://www.dot.ca.gov

MARK	DATE	REVISIONS	BY	CH'D
1	9/15/06	Deck ℄ changes	TD	AK

CONTRACT CHANGE ORDER NO. 25
SHEET 16 OF 21

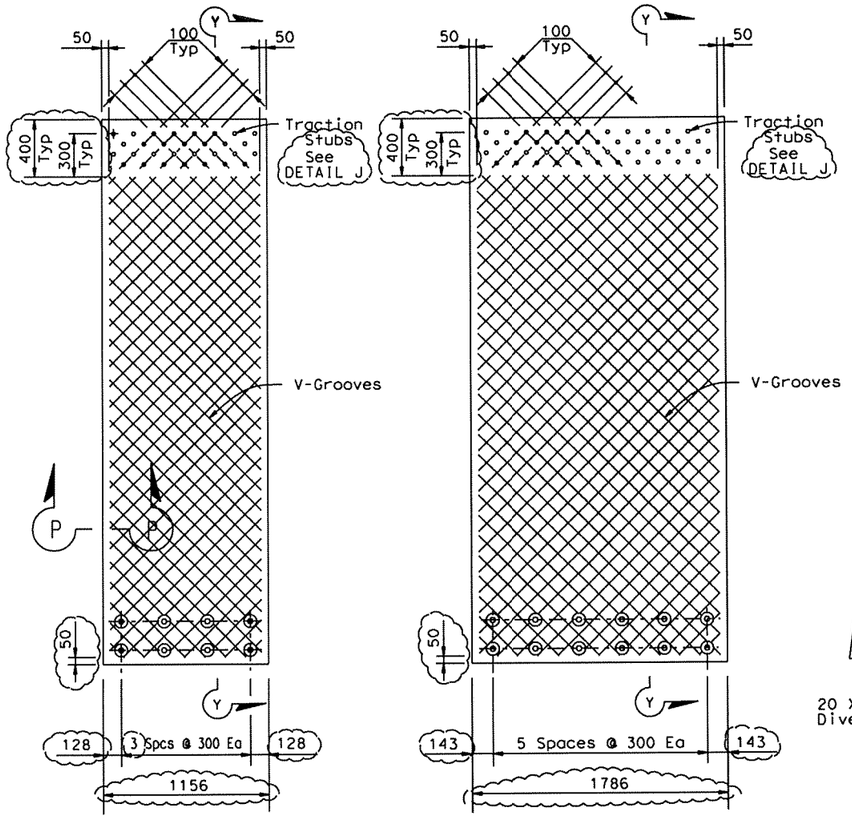

DECK PLATE A 1
SCALE = 1:20

DECK PLATE B 1
SCALE = 1:20

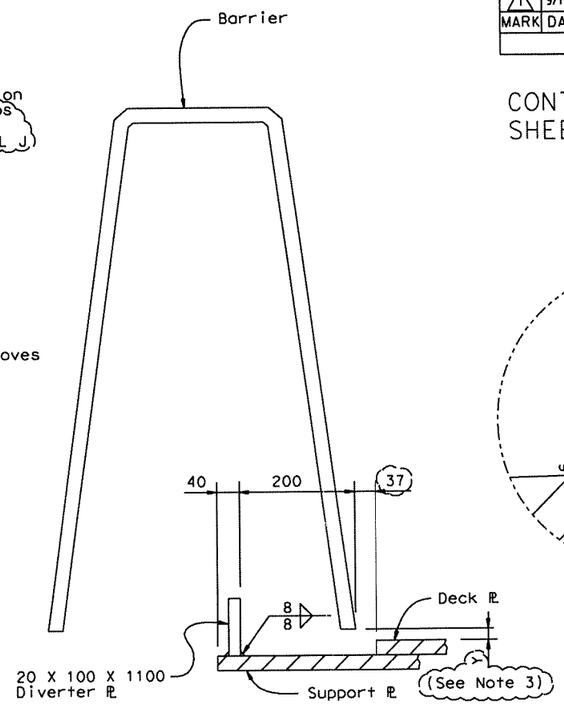

SECTION P-P 1
SCALE = 1:5

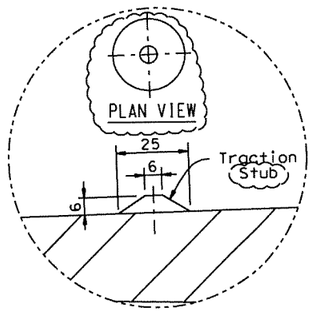

DETAIL J 1
SCALE = 1:1

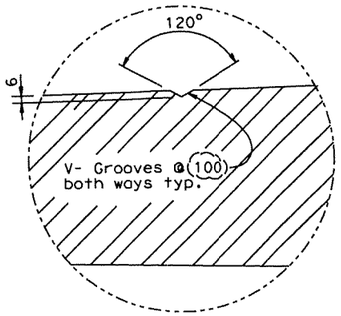

DETAIL K 1
SCALE = 1:2.5

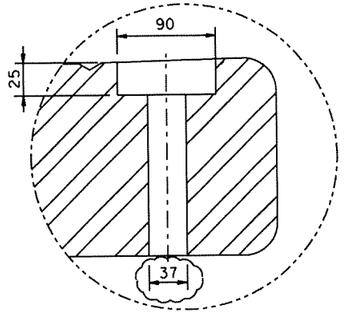

DETAIL L 1
SCALE = 1:2.5

NOTES: 1

1. V-Groove pattern is similar for all Plates
2. For deck plate plan see "DECK PLATE DETAILS NO 1" sheet.
3. In Section P-P, (Y) may vary from 10 mm (min) to 20 mm (max).
4. Traction stubs to be machined.
5. For td value see "CROSS SECTION" sheet.

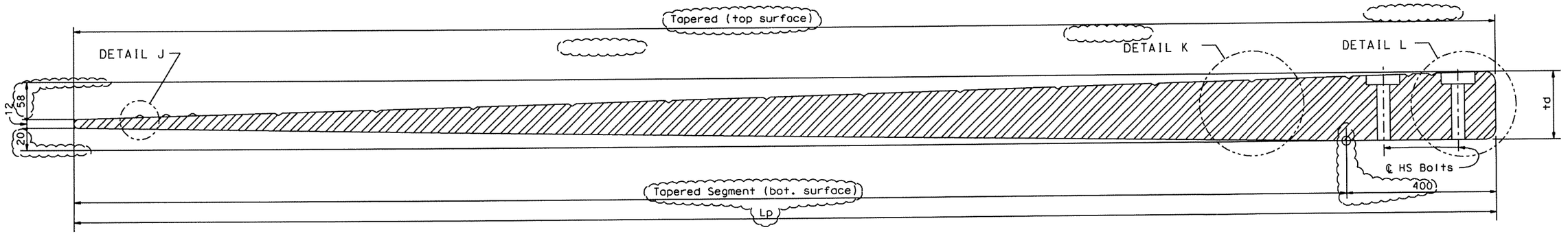

SECTION Y-Y 1
NO SCALE

THE CONTRACTOR SHALL VERIFY ALL CONTROLLING FIELD DIMENSIONS BEFORE ORDERING OR FABRICATING ANY MATERIAL.

DESIGN	BY E DELIS	CHECKED A KARTOUM	STATE OF CALIFORNIA — DEPARTMENT OF TRANSPORTATION
DETAILS	BY A R DUDSAK	CHECKED A KARTOUM	DIVISION OF ENGINEERING SERVICES — STRUCTURE DESIGN — SPECIAL DESIGNS BRANCH
QUANTITIES	BY E DELIS	CHECKED A KARTOUM	CU 04 EA 0120F1

Caltrans Metric

ALL DIMENSIONS ARE IN MILLIMETERS UNLESS OTHERWISE SHOWN

ORIGINAL SCALE IN MILLIMETERS FOR REDUCED PLANS 0 10 20 30 40 50 60 70 80 90 100

FILE => spec_des_br_proj/04-0120F1/$REQUEST

BRIDGE NO.	34-0006 L/R
KILOMETER POST	13.2/13.9

DISREGARD PRINTS BEARING EARLIER REVISION DATES

REVISION DATES: 1/24/06 | 8/18/06 | 10/30/06

SHEET 451R1 OF

SAN FRANCISCO OAKLAND BAY BRIDGE
EAST SPAN SEISMIC SAFETY PROJECT
SELF-ANCHORED SUSPENSION BRIDGE
(SUPERSTRUCTURE & TOWER)
SEISMIC JOINT (HINGE A)
DECK PLATE DETAILS NO 2

STRUCTURES DESIGN DETAIL SHEET (METRIC) (REV.03-17-04)

USERNAME => $USER DATE PLOTTED => $DATE TIME PLOTTED => $TIME

DIST	COUNTY	ROUTE	KILOMETER POST TOTAL PROJECT	SHEET NO	TOTAL SHEETS
04	SF	80	13.2/13.9	869R1	1204

REGISTERED CIVIL ENGINEER DATE

09/15/2006
PLANS APPROVAL DATE

REGISTERED PROFESSIONAL ENGINEER — EFTHYMIOS DELIS — No. 51434 — Exp. 6-30-08 — CIVIL — STATE OF CALIFORNIA

The State of California or its officers or agents shall not be responsible for the accuracy or completeness of electronic copies of this plan sheet.

Caltrans now has a web site! To get to the web site, go to: http://www.dot.ca.gov

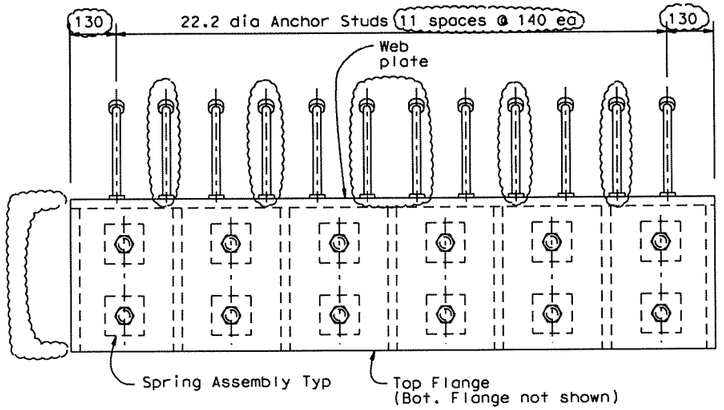

PLAN - BUILT UP CHANNEL ASSEMBLY "B" (TYP) 1

NO SCALE

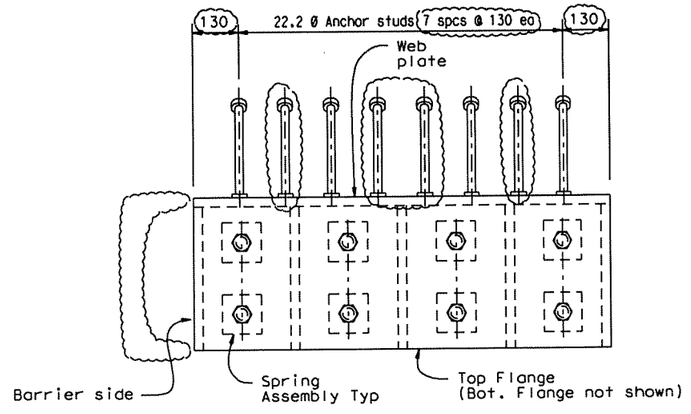

PLAN - BUILT UP CHANNEL ASSEMBLY ("A") (TYP) 1

NO SCALE

NOTE:

For SECTIONS (F-F and G-G) See "CHANNEL ASSEMBLY DETAILS NO. (2") sheet

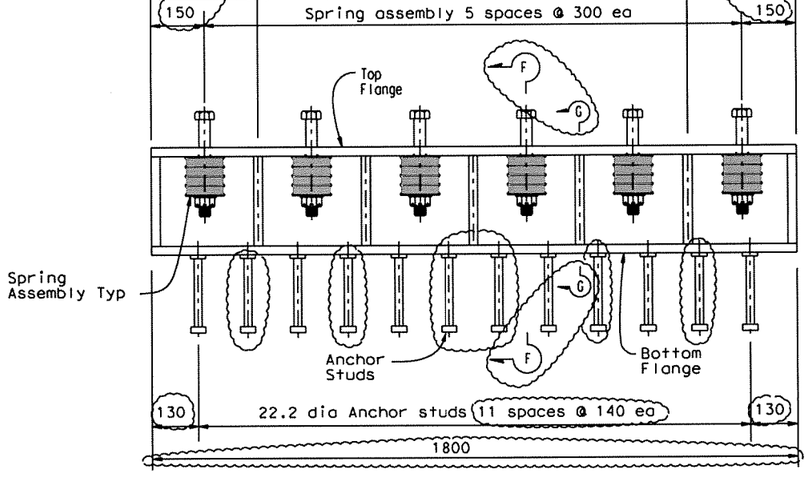

ELEVATION - BUILT UP CHANNEL ASSEMBLY "B" (TYP) 1

NO SCALE

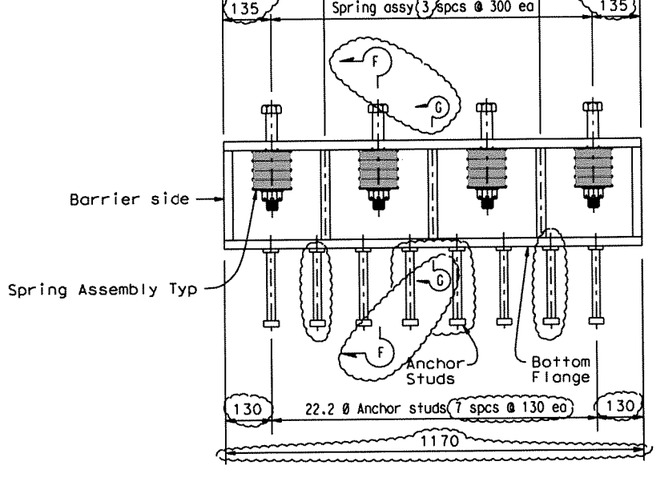

ELEVATION - BUILT UP CHANNEL ASSEMBLY ("A") (TYP) 1

NO SCALE

MARK	DATE	DESCRIPTIONS	BY	CH'D
1	9/15/06	Channel improvements	TD	AK
		REVISIONS		

CONTRACT CHANGE ORDER NO. 25
SHEET 17 OF 21

THE CONTRACTOR SHALL VERIFY ALL CONTROLLING FIELD DIMENSIONS BEFORE ORDERING OR FABRICATING ANY MATERIAL.

ALL DIMENSIONS ARE IN MILLIMETERS UNLESS OTHERWISE SHOWN

ORIGINAL SCALE IN MILLIMETERS FOR REDUCED PLANS 0 10 20 30 40 50 60 70 80 90 100

	BY	CHECKED
DESIGN	E DELIS	A KARTOUM
DETAILS	A R DUDSAK	A KARTOUM
QUANTITIES	E DELIS	A KARTOUM

STATE OF CALIFORNIA
DEPARTMENT OF TRANSPORTATION

DIVISION OF ENGINEERING SERVICES
STRUCTURE DESIGN
SPECIAL DESIGNS BRANCH

CU 04
EA 0120F1

FILE => spec_des_br_proj/04-0120F1/$REQUEST

BRIDGE NO.	34-0006 L/R
KILOMETER POST	13.2/13.9

DISREGARD PRINTS BEARING EARLIER REVISION DATES

REVISION DATES: 1/24/06 8/18/06 10/30/06

SAN FRANCISCO OAKLAND BAY BRIDGE
EAST SPAN SEISMIC SAFETY PROJECT

SELF-ANCHORED SUSPENSION BRIDGE
(SUPERSTRUCTURE & TOWER)

SEISMIC JOINT (HINGE A)

CHANNEL ASSEMBLY DETAILS NO 1

SHEET 452R1 OF

STRUCTURES DESIGN DETAIL SHEET (METRIC) (REV.03-17-04)

TIME PLOTTED => $TIME
DATE PLOTTED => $DATE
USERNAME => $USER

DIST	COUNTY	ROUTE	KILOMETER POST TOTAL PROJECT	SHEET No	TOTAL SHEETS
04	SF	80	13.2/13.9	870R1	1204

REGISTERED CIVIL ENGINEER DATE

09/15/2006
PLANS APPROVAL DATE

REGISTERED PROFESSIONAL ENGINEER
EFTHYMIOS DELIS
No. 51434
Exp. 6-30-08
CIVIL
STATE OF CALIFORNIA

The State of California or its officers or agents shall not be responsible for the accuracy or completeness of electronic copies of this plan sheet.

Caltrans now has a web site! To get to the web site, go to: http://www.dot.ca.gov

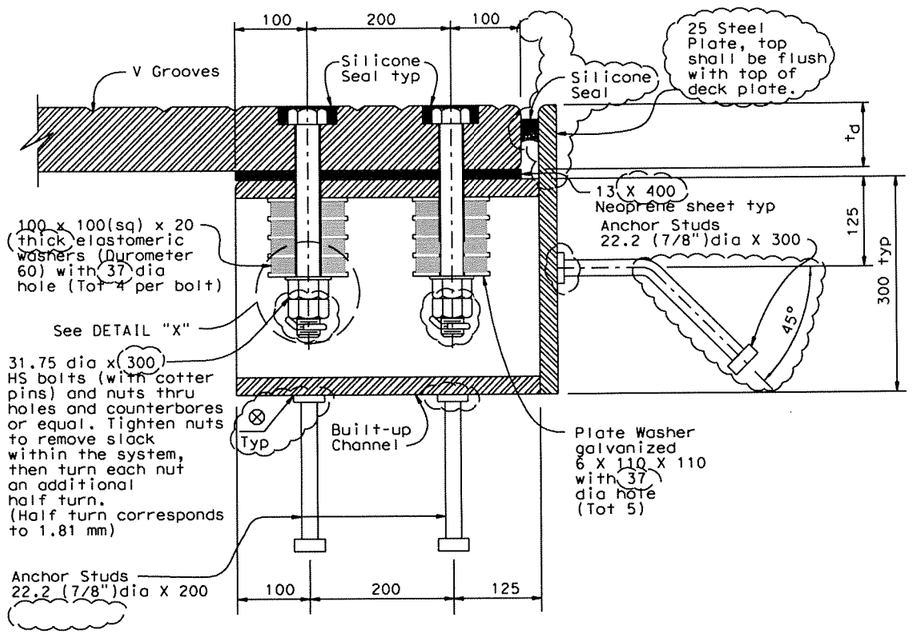

SECTION F-F 1

NO SCALE

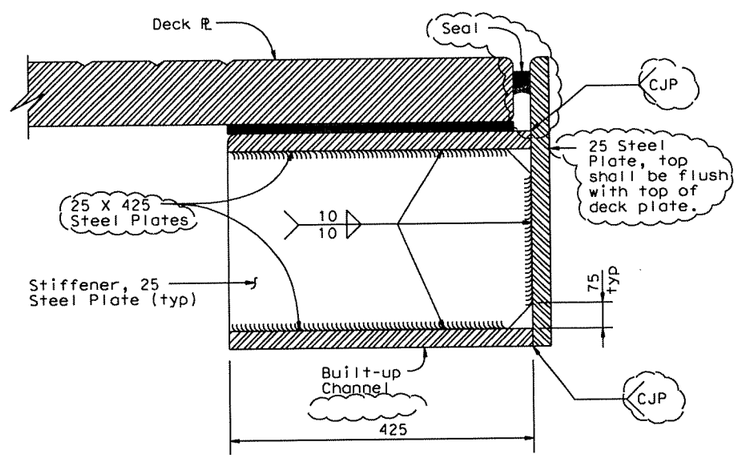

SECTION G-G 1

NO SCALE

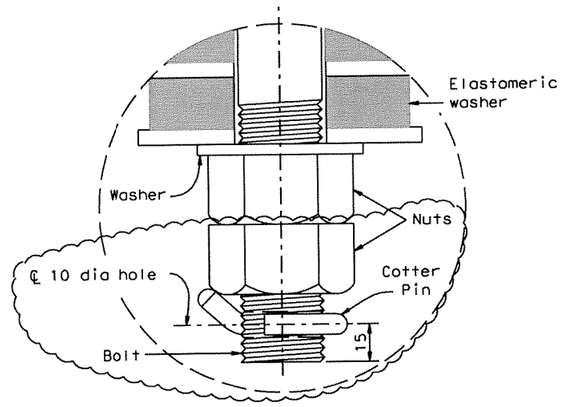

DETAIL X 1

NO SCALE

NOTE:

1. For td value see "CROSS SECTION" sheet.

MARK	DATE	REVISIONS	BY	CH'D
1	9/15/06	Channel improvements	TD	AK

CONTRACT CHANGE ORDER NO. 25
SHEET 18 OF 21

THE CONTRACTOR SHALL VERIFY ALL CONTROLLING FIELD DIMENSIONS BEFORE ORDERING OR FABRICATING ANY MATERIAL.

ALL DIMENSIONS ARE IN MILLIMETERS UNLESS OTHERWISE SHOWN

ORIGINAL SCALE IN MILLIMETERS FOR REDUCED PLANS 0 10 20 30 40 50 60 70 80 90 100

	BY	CHECKED
DESIGN	E DELIS	A KARTOUM
DETAILS	A R DUDSAK	A KARTOUM
QUANTITIES	E DELIS	A KARTOUM

STATE OF CALIFORNIA
DEPARTMENT OF TRANSPORTATION

DIVISION OF ENGINEERING SERVICES
STRUCTURE DESIGN
SPECIAL DESIGNS BRANCH

CU 04
EA 0120F1

FILE => spec_des_br_proj/04-0120F1/$REQUEST

BRIDGE NO. 34-0006 L/R
KILOMETER POST 13.2/13.9

SAN FRANCISCO OAKLAND BAY BRIDGE
EAST SPAN SEISMIC SAFETY PROJECT

SELF-ANCHORED SUSPENSION BRIDGE
(SUPERSTRUCTURE & TOWER)

SEISMIC JOINT (HINGE A)

CHANNEL ASSEMBLY DETAILS NO 2

DISREGARD PRINTS BEARING EARLIER REVISION DATES =>

REVISION DATES: 1/24/06 8/18/06 10/30/06

SHEET 453R1 OF

STRUCTURES DESIGN DETAIL SHEET (METRIC) (REV.03-17-04)

USERNAME => $USER DATE PLOTTED => $DATE TIME PLOTTED => $TIME

DIST	COUNTY	ROUTE	KILOMETER POST TOTAL PROJECT	SHEET No	TOTAL SHEETS
04	SF	80	13.2/13.9	871R1	1204

REGISTERED CIVIL ENGINEER DATE

09-15-2006
PLANS APPROVAL DATE

REGISTERED PROFESSIONAL ENGINEER — EFTHYMIOS DELIS — No. 51434 — Exp. 6-30-08 — CIVIL — STATE OF CALIFORNIA

The State of California or its officers or agents shall not be responsible for the accuracy or completeness of electronic copies of this plan sheet.

Caltrans now has a web site! To get to the web site, go to: http://www.dot.ca.gov

MARK	DATE	REVISIONS	BY	CH'D
1	9/15/06	Support PL improvements	TD	AK

CONTRACT CHANGE ORDER NO. 25
SHEET 19 OF 21

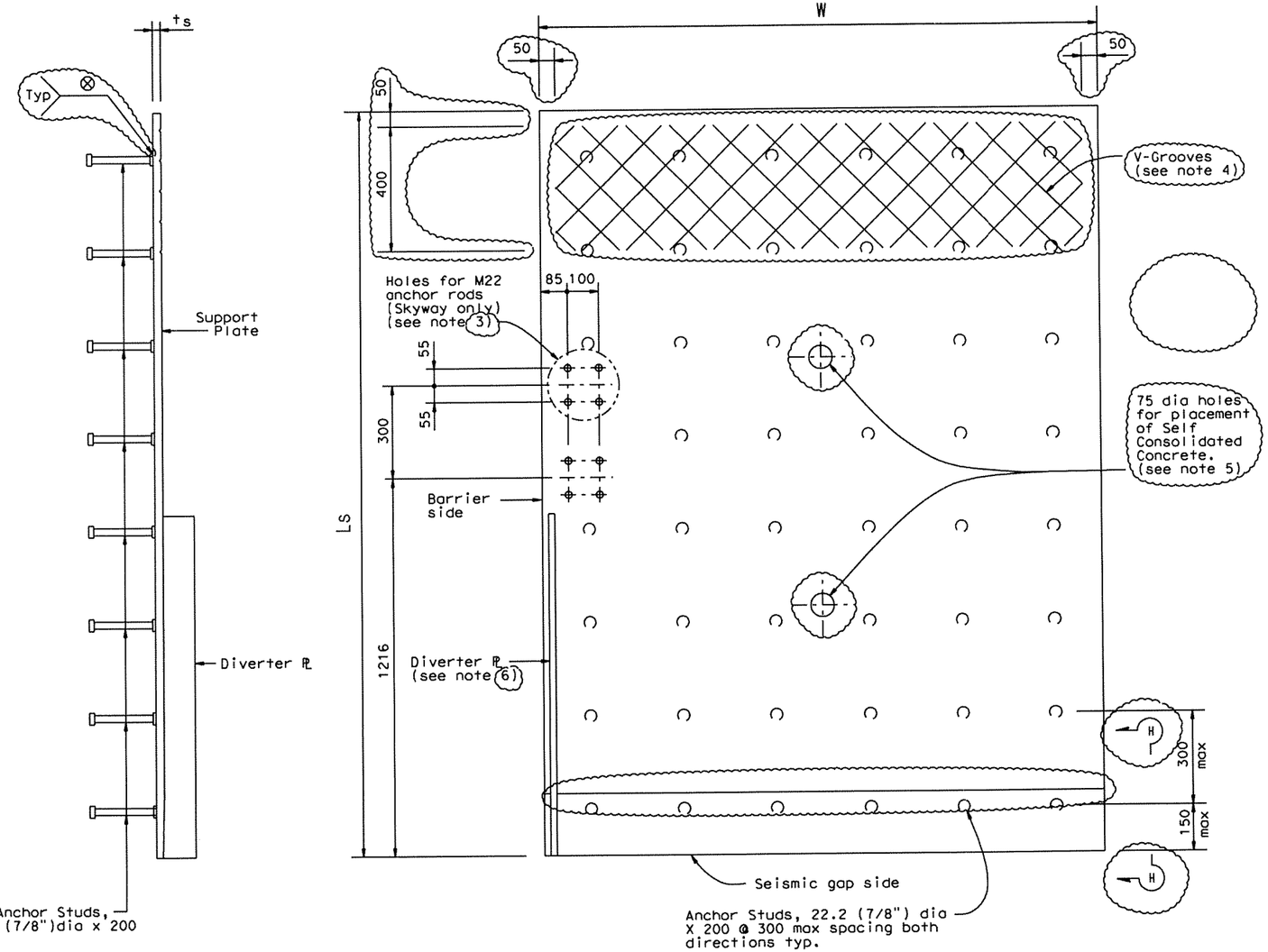

SIDE VIEW
NO SCALE

PLAN VIEW
NO SCALE

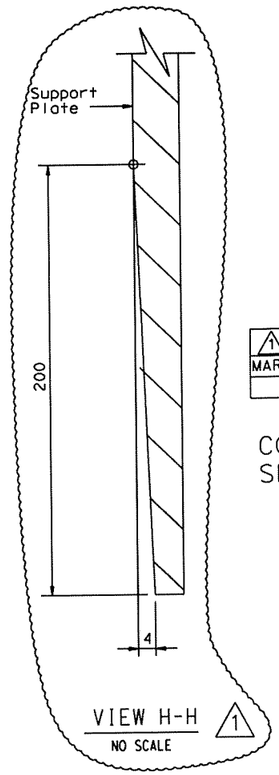

VIEW H-H 1
NO SCALE

SUPPORT PLATE WIDTH 1
MODULE A; W = 1170
MODULE B; W = 1800

SUPPORT PLATE DETAILS 1

NOTES: 1

1. For Ls and ts values see "CROSS SECTION" sheet.
2. Support Plate A shown, Support Plate B similar.
3. Install anchor rod holes in support plate Module A at barrier side only of Self-Anchored Suspension Bridge and Skyway Structure as indicated. Coordinate anchor rod holes to align with those in the barrier.
4. For V-Groove details see "DECK PLATE DETAILS NO 2" sheet.
5. Exact location of 75 dia holes to be determined prior to support plate fabrication.
6. For diverter plate details see "DECK PLATE DETAILS NO 2" sheet.
7. The area of the support plate with V-Grooves is to receive a nonskid surface in accordance with the Special Provisions. Nonskid surface area extends for the full width of the plate and for 450 mm at the end of plate. Nonskid surface in this region is to consist of epoxy only without grit.

THE CONTRACTOR SHALL VERIFY ALL CONTROLLING FIELD DIMENSIONS BEFORE ORDERING OR FABRICATING ANY MATERIAL.

	BY	CHECKED
DESIGN	E DELIS	A KARTOUM
DETAILS	A R DUDSAK	A KARTOUM
QUANTITIES	E DELIS	A KARTOUM

STATE OF CALIFORNIA
DEPARTMENT OF TRANSPORTATION

DIVISION OF ENGINEERING SERVICES
STRUCTURE DESIGN
SPECIAL DESIGNS BRANCH

CU 04
EA 0120F1

FILE => spec_des_br_proj/04-0120F1/$REQUEST

ALL DIMENSIONS ARE IN MILLIMETERS UNLESS OTHERWISE SHOWN

ORIGINAL SCALE IN MILLIMETERS FOR REDUCED PLANS 0 10 20 30 40 50 60 70 80 90 100

BRIDGE NO.	SAN FRANCISCO OAKLAND BAY BRIDGE EAST SPAN SEISMIC SAFETY PROJECT
	SELF-ANCHORED SUSPENSION BRIDGE (SUPERSTRUCTURE & TOWER)
34-0006 L/R	SEISMIC JOINT (HINGE A)
KILOMETER POST 13.2/13.9	SUPPORT PLATE DETAILS

DISREGARD PRINTS BEARING EARLIER REVISION DATES →

REVISION DATES								SHEET	OF
1/24/06	8/18/06	10/30/06						454R1	

STRUCTURES DESIGN DETAIL SHEET (METRIC) (REV.03-17-04)

USERNAME => $USER DATE PLOTTED => $DATE TIME PLOTTED => $TIME

DIST	COUNTY	ROUTE	KILOMETER POST TOTAL PROJECT	SHEET NO	TOTAL SHEETS
04	SF	80	13.2/13.9	872R1	1204

REGISTERED CIVIL ENGINEER DATE

09-15-2006
PLANS APPROVAL DATE

EFTHYMIOS DELIS No. 51434 Exp. 6-30-08 CIVIL STATE OF CALIFORNIA REGISTERED PROFESSIONAL ENGINEER

The State of California or its officers or agents shall not be responsible for the accuracy or completeness of electronic copies of this plan sheet.

Caltrans now has a web site! To get to the web site, go to: http://www.dot.ca.gov

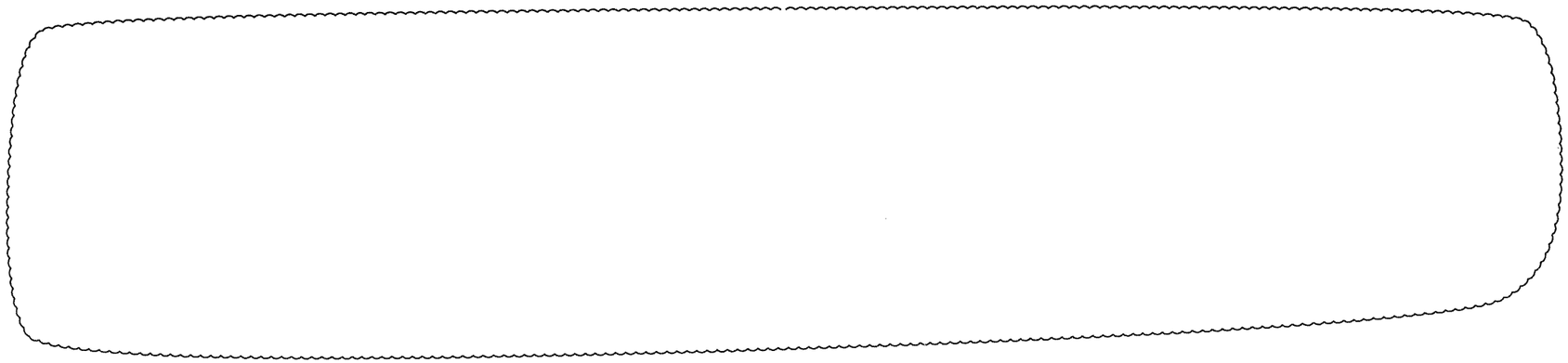

SAS SIDE

SKYWAY SIDE

ELEVATION 1
SCALE 1:10

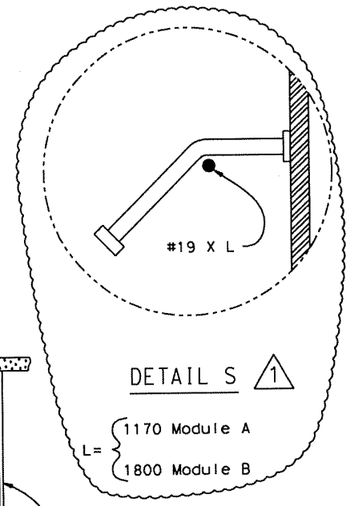

MARK	DATE	DESCRIPTIONS	BY	CH'D
1	9/15/06	Block out details	TD	AK
		REVISIONS		

CONTRACT CHANGE ORDER NO. 25
SHEET 20 OF 21

THE CONTRACTOR SHALL VERIFY ALL CONTROLLING FIELD DIMENSIONS BEFORE ORDERING OR FABRICATING ANY MATERIAL.

Caltrans Metric

ALL DIMENSIONS ARE IN MILLIMETERS UNLESS OTHERWISE SHOWN

ORIGINAL SCALE IN MILLIMETERS FOR REDUCED PLANS 0 10 20 30 40 50 60 70 80 90 100

DESIGN	BY E DELIS	CHECKED A KARTOUM	
DETAILS	BY A R DUDSAK	CHECKED A KARTOUM	
QUANTITIES	BY E DELIS	CHECKED A KARTOUM	

STATE OF CALIFORNIA
DEPARTMENT OF TRANSPORTATION

DIVISION OF ENGINEERING SERVICES
STRUCTURE DESIGN
SPECIAL DESIGNS BRANCH

CU 04
EA 0120F1

FILE => spec_des_br_proj/04-0120F1/$REQUEST

BRIDGE NO. 34-0006 L/R
KILOMETER POST 13.2/13.9

DISREGARD PRINTS BEARING EARLIER REVISION DATES

SAN FRANCISCO OAKLAND BAY BRIDGE
EAST SPAN SEISMIC SAFETY PROJECT

SELF-ANCHORED SUSPENSION BRIDGE
(SUPERSTRUCTURE & TOWER)

SEISMIC JOINT (HINGE A)

REINFORCEMENT DETAILS

REVISION DATES 1 9/15/06 8/18/06 10/30/06

SHEET 455R1 OF

STRUCTURES DESIGN DETAIL SHEET (METRIC) (REV.03-17-04)

USERNAME => #USER DATE PLOTTED => #DATE TIME PLOTTED => #TIME

DIST	COUNTY	ROUTE	KILOMETER POST TOTAL PROJECT	SHEET No	TOTAL SHEETS
04	SF	80	13.2/13.9	872S1	1204

REGISTERED CIVIL ENGINEER DATE

09/15/2006
PLANS APPROVAL DATE

REGISTERED PROFESSIONAL ENGINEER — EFTHYMIOS DELIS — No. 51434 — Exp. 6-30-08 — CIVIL — STATE OF CALIFORNIA

The State of California or its officers or agents shall not be responsible for the accuracy or completeness of electronic copies of this plan sheet.

Caltrans now has a web site! To get to the web site, go to: http://www.dot.ca.gov

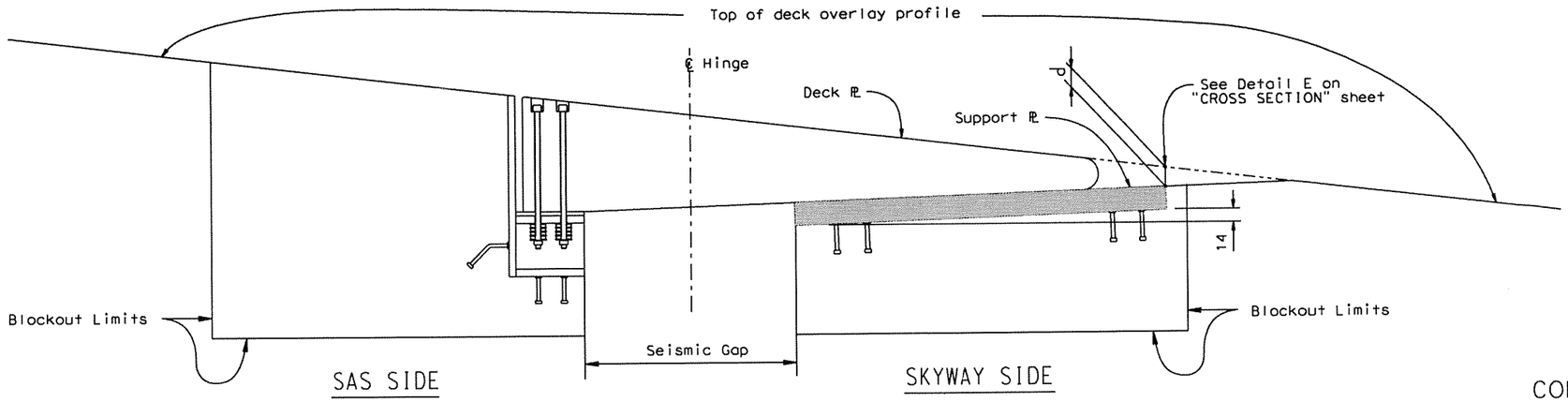

INSTALLATION DETAIL

NO SCALE

CONTRACT CHANGE ORDER NO. 25
SHEET 21 OF 21

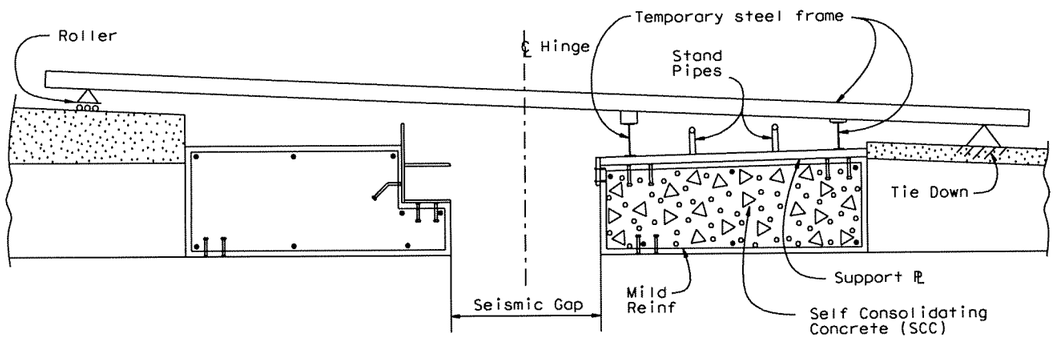

STEP 1
NO SCALE

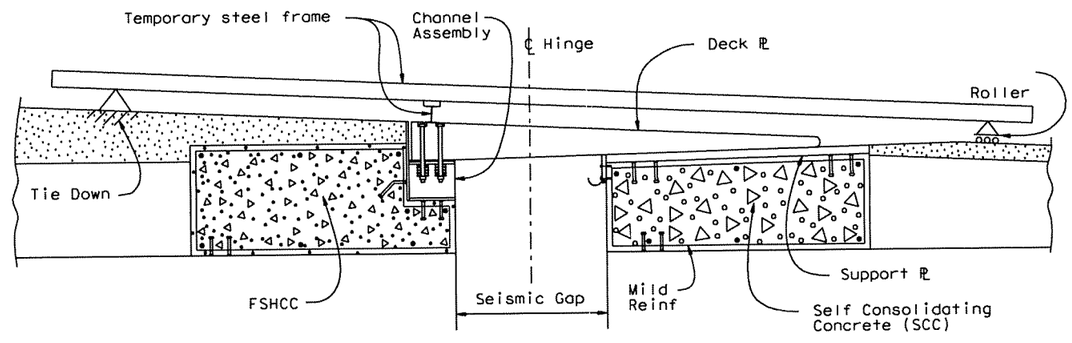

STEP 2
NO SCALE

SCHEMATIC CONSTRUCTION SEQUENCE

NO SCALE

- Place anchor studs and mild reinforcement in blockout areas.
- Install temporary steel frame.
- For each joint module, place support plate at elevations and locations shown on plans.
- Align all joint modules together and secure them.
- Pour self consolidating concrete (SCC) below support plate.
- Let SCC set and reach 14 MPa strength min.
- Remove stand pipes and clean top surface of support plates.

- Steel frame supports are changed so frame is tied down on channel assembly side and is free to move on support plate side.
- For each joint module, place channel assembly and deck plate at elevations and locations shown on plans. Channel assembly sits suspended from steel frame. Deck plate sits on support plate and channel assembly. Make adjustments so full bearing between deck and support plates is achieved.
- Align all joint modules together and secure them.
- Pour Fast Setting Hydraulic Cement Concrete (FSHCC) in the channel assembly blockout area.
- Let FSHCC set for at least 3 hours minimum.
- Tighten bolts and place cotter pins.
- Install gutter.
- Place deck overlay.
- Seal joint with silicone seal.

NOTES:

1. Not all reinforcement and joint details are shown for clarity.

THE CONTRACTOR SHALL VERIFY ALL CONTROLLING FIELD DIMENSIONS BEFORE ORDERING OR FABRICATING ANY MATERIAL.

	BY	CHECKED
DESIGN	E DELIS	A KARTOUM
DETAILS	A R DUDSAK	A KARTOUM
QUANTITIES	E DELIS	A KARTOUM

STATE OF CALIFORNIA
DEPARTMENT OF TRANSPORTATION

DIVISION OF ENGINEERING SERVICES
STRUCTURE DESIGN
SPECIAL DESIGNS BRANCH

CU 04
EA 0120F1

BRIDGE NO. 34-0006 L/R
KILOMETER POST 13.2/13.9

SAN FRANCISCO OAKLAND BAY BRIDGE
EAST SPAN SEISMIC SAFETY PROJECT

SELF-ANCHORED SUSPENSION BRIDGE
(SUPERSTRUCTURE & TOWER)

SEISMIC JOINT (HINGE A)

CONSTRUCTION SEQUENCE

ALL DIMENSIONS ARE IN MILLIMETERS UNLESS OTHERWISE SHOWN

ORIGINAL SCALE IN MILLIMETERS FOR REDUCED PLANS 0 10 20 30 40 50 60 70 80 90 100

DISREGARD PRINTS BEARING EARLIER REVISION DATES

REVISION DATES: 1/24/06 8/18/06 10/30/06

SHEET 455S1 OF

FILE => spec_des_br_proj/04-0120F1/#REQUEST

STRUCTURES DESIGN DETAIL SHEET (METRIC) (REV.03-17-04)

TIME PLOTTED => #TIME
DATE PLOTTED => #DATE
USERNAME => #USER