DIST.	COUNTY	ROUTE	KILOMETER POST TOTAL PROJECT	SHEET NO.	TOTAL SHEETS
04	SF	80	13.2/13.9	864S6	1204

REGISTERED ENGINEER - CIVIL

07-30-10

PLANS APPROVAL DATE

The State of California or its officers or agents shall not be responsible for the accuracy or completeness of electronic copies of this plan sheet.

REGISTERED PROFESSIONAL ENGINEER Marwan N. Nader No. C 054426 Exp. 12/31/11 CIVIL STATE OF CALIFORNIA

T.Y. LIN / MOFFATT & NICHOL
825 BATTERY STREET
SAN FRANCISCO, CA 94111

Caltrans now has a web site! To get to the web site, go to: http://www.dot.ca.gov

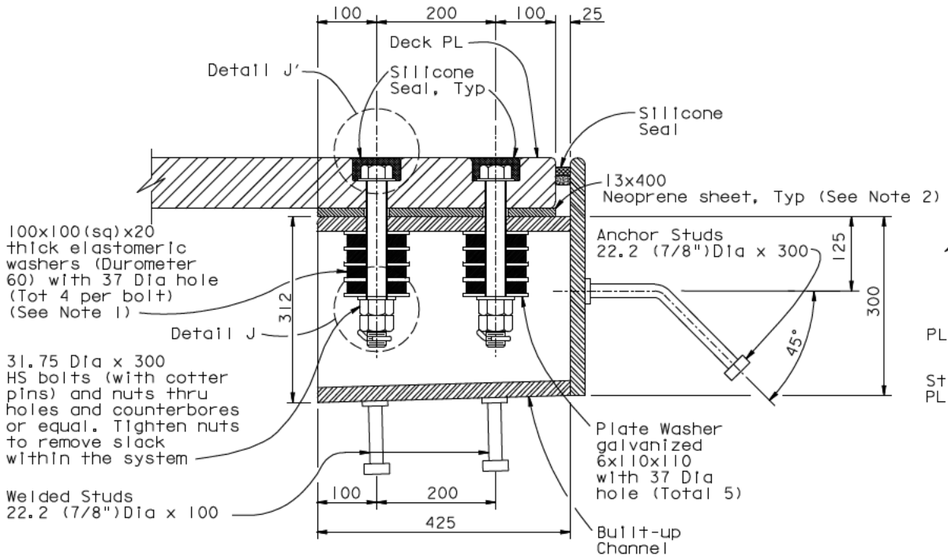

SECTION H-H
NTS

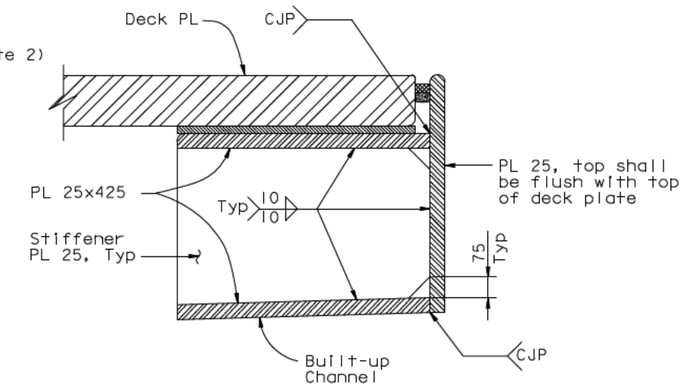

SECTION H'-H'
NTS

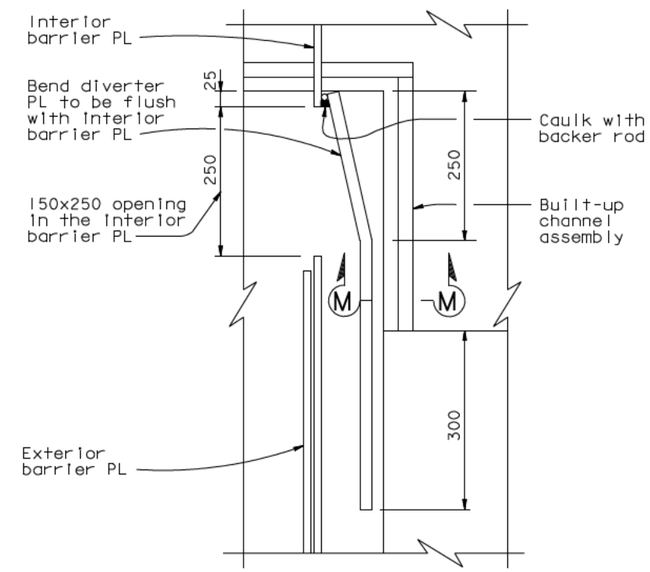

DETAIL L
1:5

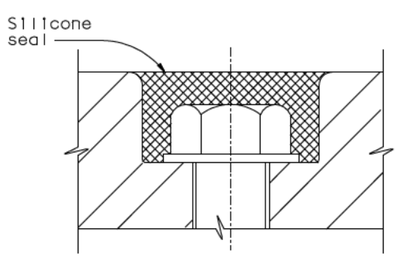

DETAIL J'
NTS

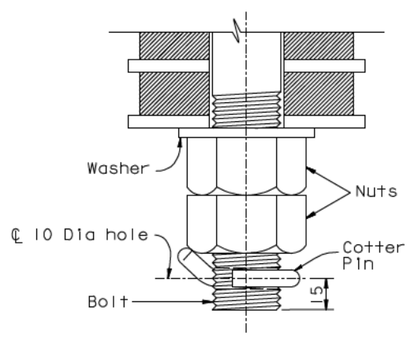

DETAIL J
NTS

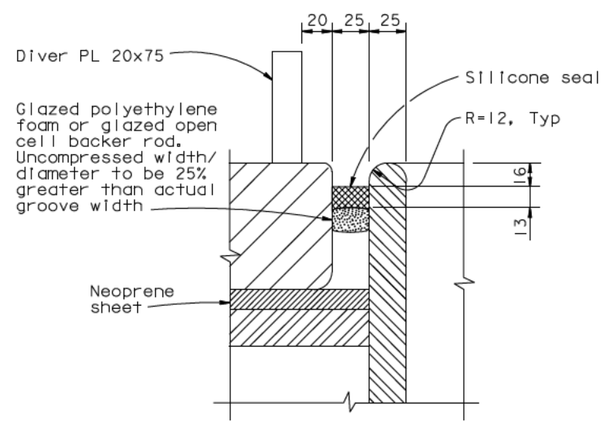

SECTION M-M
NTS

NOTES:

1. Elastomeric washers shall be plain neoprene.
2. The length of the 13x400 mm neoprene sheet below the deck plate is 1365 mm and 1800 mm long for modules "A" and "B" respectively.

CONTRACT CHANGE ORDER NO.
SHEET ____ OF ____

REQUESTS FOR INFORMATION NOT ADDRESSED IN THIS CCO REMAIN IN FORCE

ALL DIMENSIONS ARE IN MILLIMETERS UNLESS OTHERWISE SHOWN

R. Vallizadeh/V. Toan/Y.L./W.L./F.C.
DESIGN OVERSIGHT
SIGN OFF DATE 07/30/10

MARK	DATE	DESCRIPTIONS	BY	CH'D	CCO#
0	07/30/10	SEISMIC JOINT MODIFICATIONS HINGE A	CR	MN	25

REVISIONS

DESIGN	BY C. Redfield	CHECKED M. Nader	
DETAILS	BY H. Patel	CHECKED M. Benoit	
QUANTITIES	BY H. Patel	CHECKED J. Duxbury	

PREPARED FOR THE STATE OF CALIFORNIA DEPARTMENT OF TRANSPORTATION

R. Manzanarez
PROJECT ENGINEER

BRIDGE NO. 34-0006L/R
KILOMETER POST 13.2/13.9

SAN FRANCISCO OAKLAND BAY BRIDGE
EAST SPAN SEISMIC SAFETY PROJECT
SELF-ANCHORED SUSPENSION BRIDGE
(SUPERSTRUCTURE & TOWER)

HINGE A EXPANSION JOINT DETAILS NO. 8

Rev. Date: 5-18-98

ORIGINAL SCALE IN MILLIMETERS FOR REDUCED PLANS 0 10 20 30 40 50 60 70 80 90 100

CU 04
EA 0120F1

DISREGARD PRINTS BEARING EARLIER REVISION DATES 07/30/10

REVISION DATES (PRELIMINARY STAGE ONLY)

SHEET 447S6 OF

FILE -> I:\bb\04-012001\sas\contract plans and cco\cco\cco#25\5-revision 07-30-10\dgn\akjnt01f.dgn

USERNAME -> arivera DATE PLOTTED -> 30 JUL 2010 TIME PLOTTED -> 11:40:13

100 % PS&E