DIST	COUNTY	ROUTE	KILOMETER POST TOTAL PROJECT	SHEET No	TOTAL SHEETS
04	SF	80	13.2/13.9	868R4	1204

REGISTERED CIVIL ENGINEER DATE

09/15/2006
PLANS APPROVAL DATE

REGISTERED PROFESSIONAL ENGINEER EFTHYMIOS DELIS No. 51434 Exp. 6-30-10 CIVIL STATE OF CALIFORNIA

The State of California or its officers or agents shall not be responsible for the accuracy or completeness of electronic copies of this plan sheet.

Caltrans now has a web site! To get to the web site, go to: http://www.dot.ca.gov

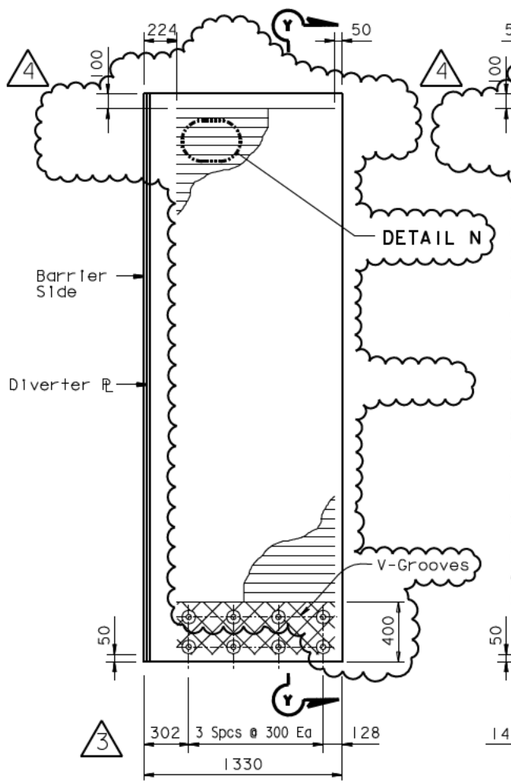

DECK PLATE A
SCALE = 1:20

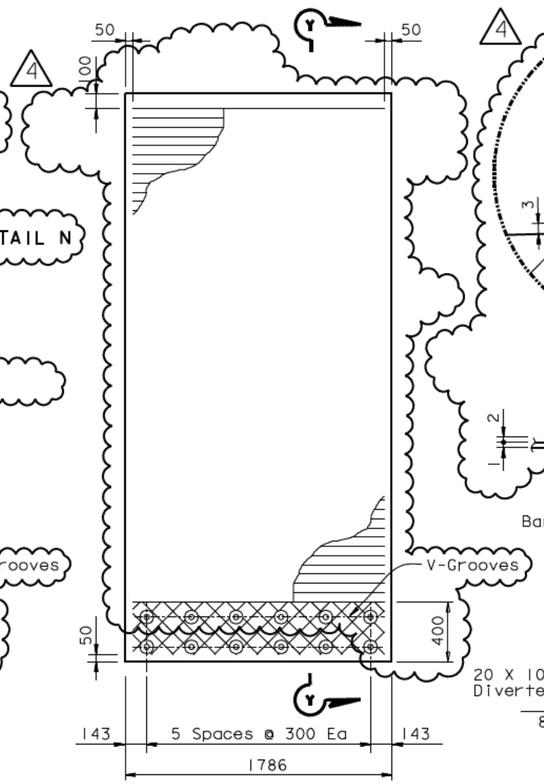

DECK PLATE B
SCALE = 1:20

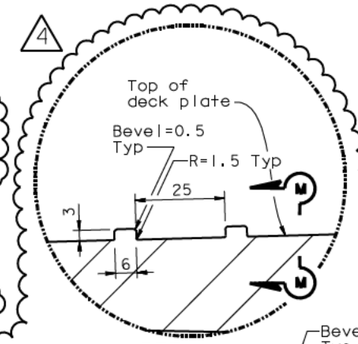

DETAIL J

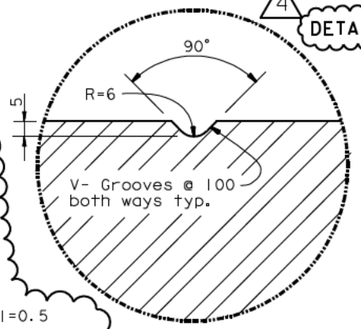

DETAIL K

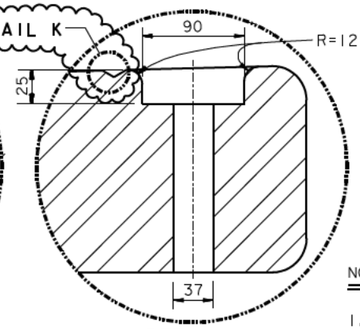

DETAIL L

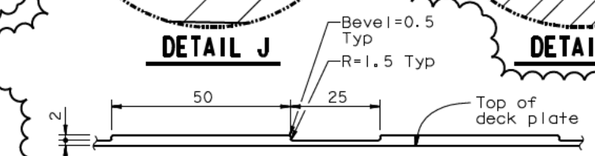

SECTION M-M

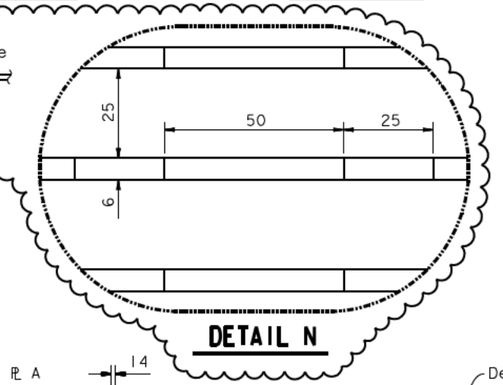

DETAIL N

NOTES:

1. V-Groove pattern is similar for all Plates
2. For deck plate plan see "DECK PLATE DETAILS NO 1" sheet.
3. In Section P-P, Y may vary from 10 mm (min) to 20 mm (max) at the thickest end of the deck ℞ (td).
4. Note deleted. △4
5. For td, Lp and Ls values see "CROSS SECTION" sheet.
6. For SECTION P-P see "DECK PLATE DETAILS NO 1" sheet
7. The length of the 13 X 400 mm neoprene sheet below the deck plate is 1410 mm and 1800 mm long for modules "A" and "B" respectively.

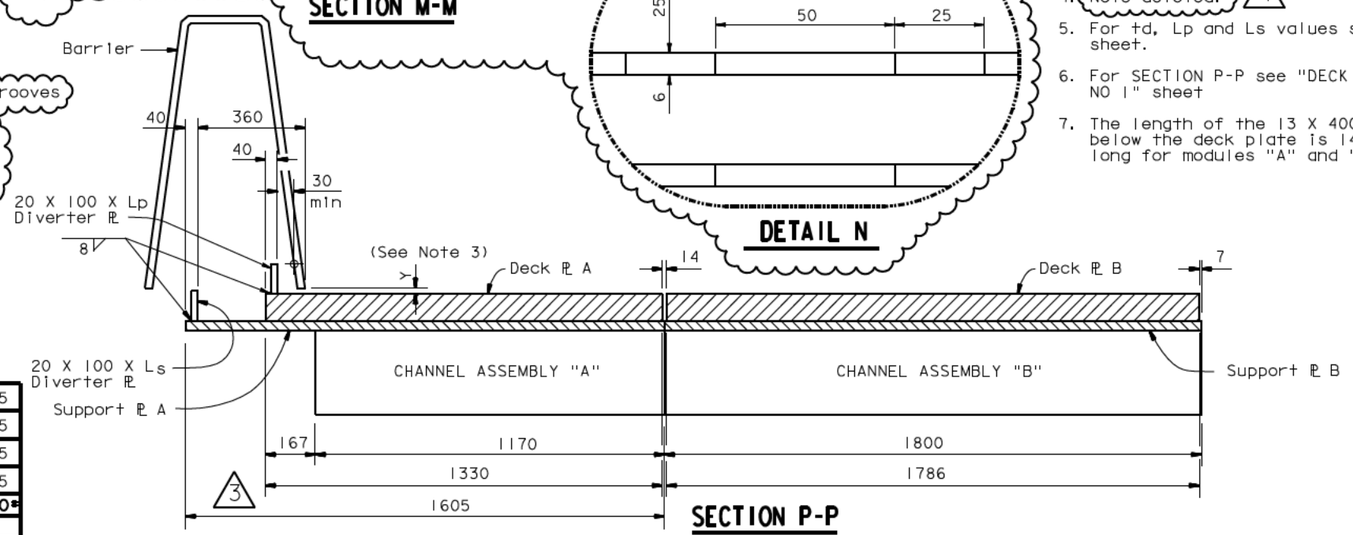

SECTION P-P
SCALE = 1:10

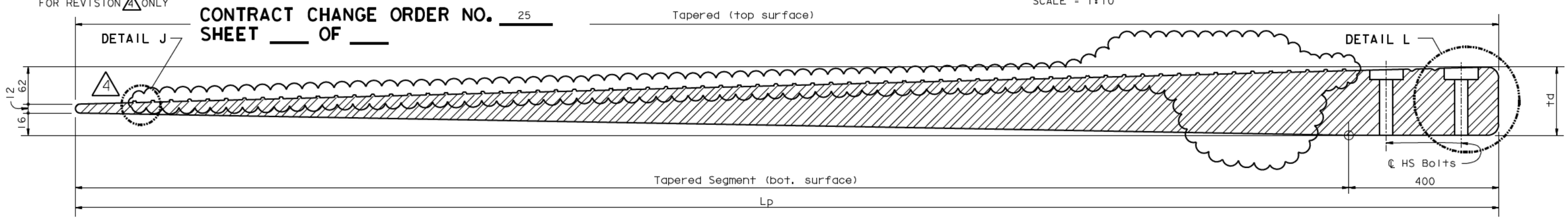

SECTION Y-Y
NO SCALE

MARK	DATE	DESCRIPTIONS	BY	CH'D	CCO#
4	11/25/09	Seismic joint modifications Hinge A	RM	AA	25
3	12/23/08	Seismic joint modifications Hinge A	TD	AK	25
2	12/18/07	Seismic joint modifications Hinge A	TD	AK	25
1	9/15/06	Deck ℞ changes	TD	AK	25

REVISIONS

REGISTERED PROFESSIONAL ENGINEER Enrico C. Maggenti No. 46920 Exp. 6/30/11 CIVIL STATE OF CALIFORNIA

FOR REVISION △4 ONLY

CONTRACT CHANGE ORDER NO. 25
SHEET ___ OF ___

THE CONTRACTOR SHALL VERIFY ALL CONTROLLING FIELD DIMENSIONS BEFORE ORDERING OR FABRICATING ANY MATERIAL.

Caltrans Metric

ALL DIMENSIONS ARE IN MILLIMETERS UNLESS OTHERWISE SHOWN

ORIGINAL SCALE IN MILLIMETERS FOR REDUCED PLANS 0 10 20 30 40 50 60 70 80 90 100

	BY	CHECKED
DESIGN	E DELIS	A KARTOUM
DETAILS	A R DUDSAK	A KARTOUM
QUANTITIES	E DELIS	A KARTOUM

STATE OF CALIFORNIA
DEPARTMENT OF TRANSPORTATION

DIVISION OF ENGINEERING SERVICES
STRUCTURE DESIGN
SPECIAL DESIGNS BRANCH

CU 04
EA 0120F1

BRIDGE NO. 34-0006 L/R
KILOMETER POST 13.2/13.9

DISREGARD PRINTS BEARING EARLIER REVISION DATES

REVISION DATES: 1/24/06 8/18/06 10/30/06 1/3/08 12/23/08 2/4/09 2/10/09 2/18/09

SHEET 451R4 OF

SAN FRANCISCO OAKLAND BAY BRIDGE
EAST SPAN SEISMIC SAFETY PROJECT

SELF-ANCHORED SUSPENSION BRIDGE
(SUPERSTRUCTURE & TOWER)

SEISMIC JOINT (HINGE A)

DECK PLATE DETAILS NO 2

FILE => spec_des_br_proj/04-0120F1/1\bb\04-0120O1\sds\contract plans and cco\cco\cco#25\3-ct sheets 10-30-09\dgn\akjsb02.dgn

USERNAME => dwinrow DATE PLOTTED => 20 NOV 2009 TIME PLOTTED => 14:00:18