DIST	COUNTY	ROUTE	KILOMETER POST TOTAL PROJECT	SHEET No	TOTAL SHEETS
04	SF	80	13.2/13.9	868R3	1204

REGISTERED CIVIL ENGINEER DATE

09/15/2006
PLANS APPROVAL DATE

REGISTERED PROFESSIONAL ENGINEER
EFTHYMIOS DELIS
No. 51434
Exp. 6-30-10
CIVIL
STATE OF CALIFORNIA

The State of California or its officers or agents shall not be responsible for the accuracy or completeness of electronic copies of this plan sheet.

Caltrans now has a web site! To get to the web site, go to: http://www.dot.ca.gov

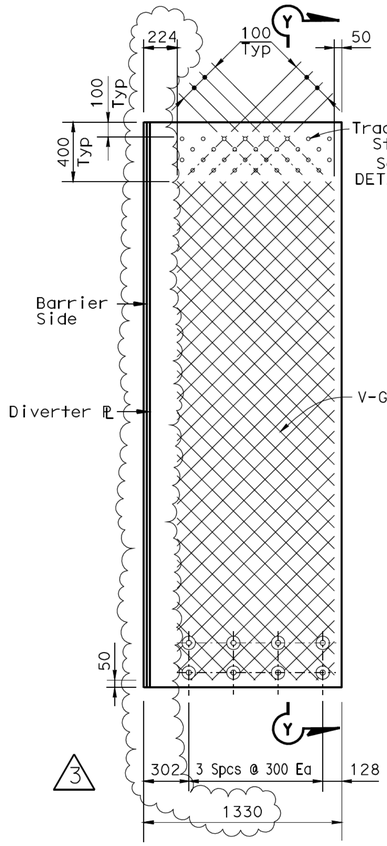

DECK PLATE A
SCALE = 1:20

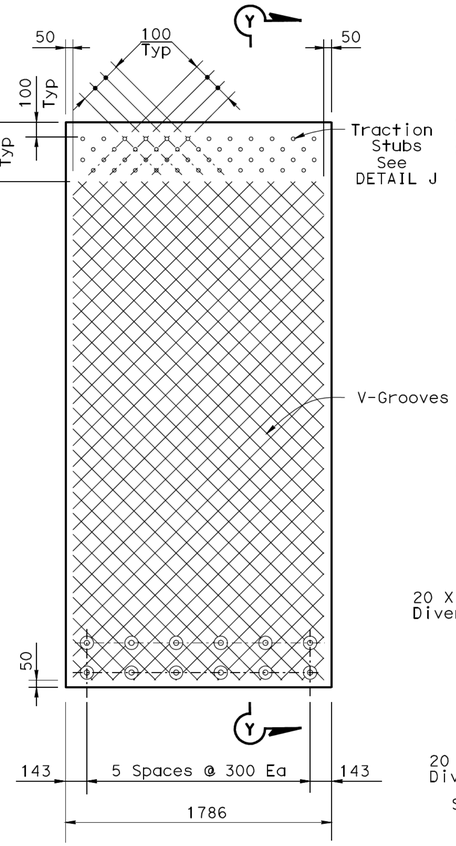

DECK PLATE B
SCALE = 1:20

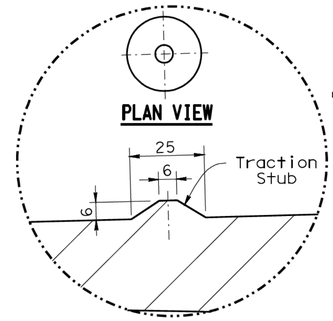

DETAIL J

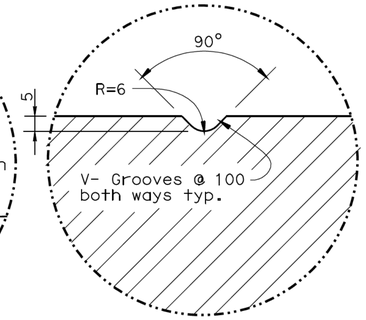

DETAIL K

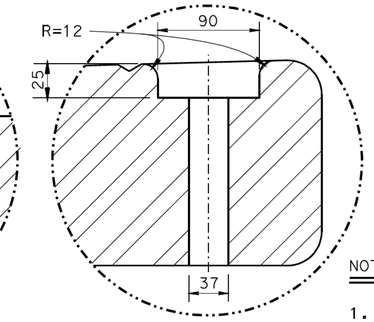

DETAIL L

MARK	DATE	DESCRIPTIONS	BY	CH'D	CCO#
3	12/23/08	Seismic joint modifications Hinge A	TD	AK	25
2	12/18/07	Seismic joint modifications Hinge A	TD	AK	25
1	9/15/06	Deck ℄ changes	TD	AK	25

REVISIONS

CONTRACT CHANGE ORDER NO. 25
SHEET ___ OF ___

NOTES:

1. V-Groove pattern is similar for all Plates
2. For deck plate plan see "DECK PLATE DETAILS NO 1" sheet.
3. In Section P-P, Y may vary from 10 mm (min) to 20 mm (max) at the thickest end of the deck ℄ (td).
4. Traction stubs to be machined.
5. For td, Lp and Ls values see "CROSS SECTION" sheet.
6. For SECTION P-P see "DECK PLATE DETAILS NO 1" sheet
7. The length of the 13 X 400 mm neoprene sheet below the deck plate is 1410 mm and 1800 mm long for modules "A" and "B" respectively.

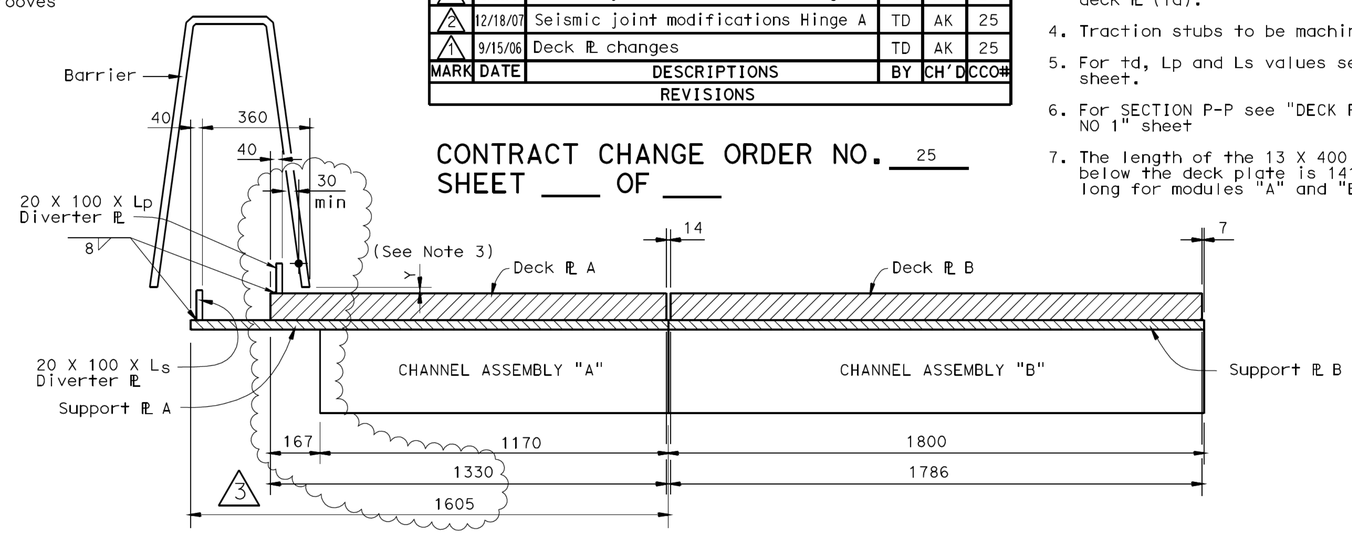

SECTION P-P
SCALE = 1:10

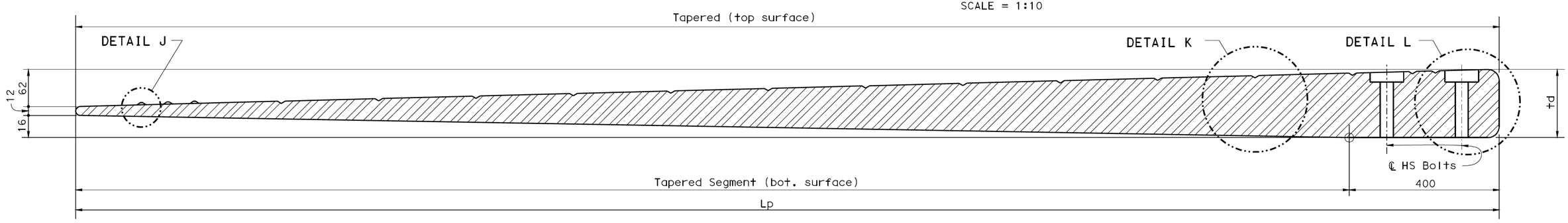

SECTION Y-Y
NO SCALE

THE CONTRACTOR SHALL VERIFY ALL CONTROLLING FIELD DIMENSIONS BEFORE ORDERING OR FABRICATING ANY MATERIAL.

SAN FRANCISCO OAKLAND BAY BRIDGE
EAST SPAN SEISMIC SAFETY PROJECT

SELF-ANCHORED SUSPENSION BRIDGE
(SUPERSTRUCTURE & TOWER)

SEISMIC JOINT (HINGE A)

DECK PLATE DETAILS NO 2

Caltrans Metric

	BY	CHECKED
DESIGN	E DELIS	A KARTOUM
DETAILS	A R DUDSAK	A KARTOUM
QUANTITIES	E DELIS	A KARTOUM

STATE OF CALIFORNIA
DEPARTMENT OF TRANSPORTATION

DIVISION OF ENGINEERING SERVICES
STRUCTURE DESIGN
SPECIAL DESIGNS BRANCH

BRIDGE NO. 34-0006 L/R
KILOMETER POST 13.2/13.9

ALL DIMENSIONS ARE IN MILLIMETERS UNLESS OTHERWISE SHOWN

ORIGINAL SCALE IN MILLIMETERS FOR REDUCED PLANS 0 10 20 30 40 50 60 70 80 90 100

CU 04
EA 0120F1

DISREGARD PRINTS BEARING EARLIER REVISION DATES

REVISION DATES: 1/24/06 8/18/06 10/30/06 1/21/08 12/23/08 2/14/09 2/18/09

SHEET 451R3 OF

FILE => spec_des_br_proj/04-0120F1/zbkjsb04.dgn

STRUCTURES DESIGN DETAIL SHEET (METRIC) (REV.03-17-04)

USERNAME => tdudsak DATE PLOTTED => 18-FEB-2009 TIME PLOTTED => 10:26